SPACECRAFT COMPONENTS CORP.

Your Connector Consultant Since 1962

Multi-Pin Cylindrical Reverse Bayonet Connectors

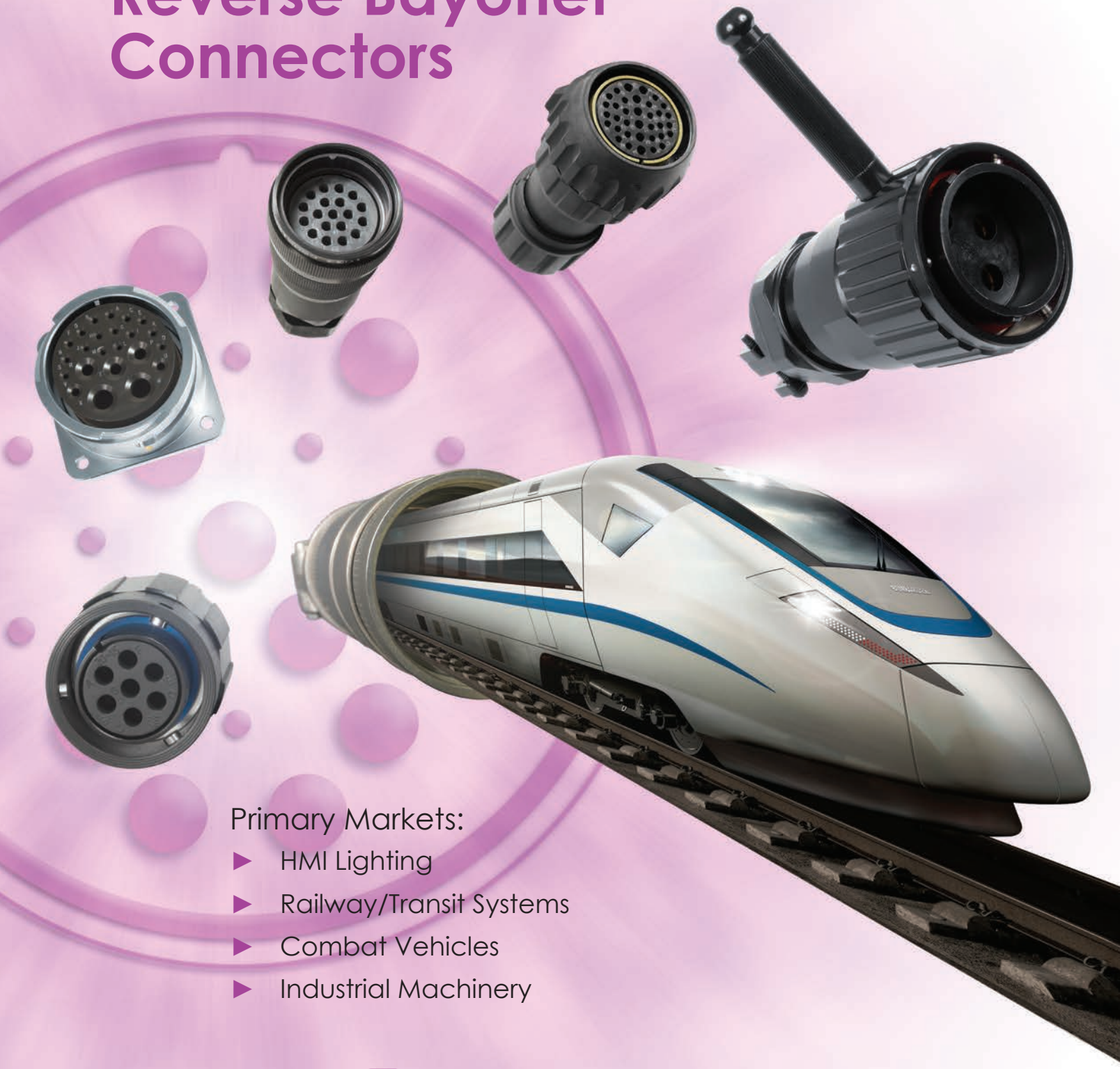

Primary Markets:

- HMI Lighting
- Railway/Transit Systems
- Combat Vehicles
- Industrial Machinery

SPACECRAFT COMPONENTS CORP.®

CATALOG 302

SPACECRAFT AT A GLANCE

Founded in 1962, Spacecraft is a family-owned, leading manufacturer and distributor of cylindrical connectors for the railways/transit, military, aerospace and various harsh environment markets.

As a Manufacturer, Spacecraft's core focus is manufacturing reverse bayonet connectors geared towards railway and transit applications. Our extensive engineering and manufacturing experience with reverse bayonet connectors provides us with the opportunity to offer a broad range of derivative cylindrical products in a short period of time with an assurance of exceptional quality.

As a Distributor, Spacecraft has developed key partnerships with world-class manufacturers whose products encompass MIL-SPEC and harsh environment industrial connectors. We are an authorized MIL-STD-790 value-added assembler for our principal connector manufacturers, such as Souriau, Corsair, Sunbank and Astro Tool Corp. We stock a wide and deep variety of QPL components which enables us to provide a vast assortment of completed QPL connectors within a three-day turnaround.

As an Organization, Spacecraft prides itself on providing consultative service by utilizing our greatest asset: Our people!

Spacecraft invites you to tour our best-in-class facility located in North Las Vegas, Nevada, USA.

Spacecraft's Core Values

- AS9100/ISO 9001 Registered
- MIL-STD-790 Certified
- Technical Solutions Oriented
- A Consultative Sales Team
- Vertically Integrated
- Supporter of the Buy American Act

NSF-ISR
Registered to AS9100 (with ISO 9001)

ANAB ACCREDITED
ISO/IEC 17021
MANAGEMENT SYSTEMS CERTIFICATION BODY

RoHS

International Traffic in Arms Regulations ITAR Compliant

48 Hour Power

You have our commitment to assemble and deliver stock-to-build products from Souriau and Corsair within 48 Hours.

Exceeding Your Quality Expectations

Spacecraft Components Corp. warrants to the original purchaser that it will correct by replacement any defect in workmanship or in-operation of any component purchased from Spacecraft Components Corp. for the life of the equipment in which the component is originally and properly installed. This agreement and warranty supersedes all other warranties expressed or implied.

CIDS (Connector Identification System)

Your Online Source for MIL-SPEC Cylindrical Connectors

- Access to MIL-SPEC Data Sheets in an Instant
- Identify Crimp Tools for Your Contacts
- Identify the Mating Connector
- Identify the Accessories for Your Connector

Mission Statement

To provide a work environment where our employees can meet their potential and thrive in an atmosphere of excellence by utilizing their strengths and attributes towards supporting our customers, thereby providing superior products and exceptional service which helps our customers gain a competitive advantage in their markets.

Locations

Nevada Headquarters	702.851.7600
Florida Office	954.748.4540
South Carolina Office	954.748.4540
Italy Office	+39 (335) 719.4512

MULTI-PIN CYLINDRICAL REVERSE BAYONET SCPB CONNECTORS

© 2019 Spacecraft Components Corp. North Las Vegas, NV 89032

CATALOG 302 TABLE OF CONTENTS

AS50151/VG95234 Reverse Bayonet Coupling Connectors Comparison. II
AS50151 Reverse Bayonet Coupling Connectors 1C-1
Connector Types, Quick Reference 1C-2
Entertainment Industry Connectors 1C-89
Audio-Video 1C-91
Control Lighting Connectors. 1C-92
HMI Lighting Connectors. 1C-95
Shell Size 52 Transit Connectors 1C-103
SCPB Series Connector Accessory Quick Reference 2C-1
Contacts 3C-1
Contact Crimp Adapters 3C-8
Coaxial Contacts. 3C-11
Contact Tooling 3C-12
Thermocouple Contacts. 3C-15
Insert Configurations 4C-1
Connectors for Plastic Conduit 5C-1
Mounting Data for Receptacles 6C-2
Accessories. 6C-3
Terminal Lugs 6C-15
Termination Bands 6C-16
Cross Reference/Index 7C-1

REVERSE BAYONET EXPLANATION, HISTORY & COMPARISION

INTRODUCTION

Reverse Bayonet is considered a very robust, quick disconnect system. Standard bayonet coupling systems can be found in MIL-DTL-26482, 26500, 38999 and 83723. The receptacles have three (3) pins affixed to the outside of shells, while the plug has three (3) annular grooves on the inside of the coupling nut.

In a reverse bayonet system, the receptacles have three (3) annular grooves on the outside of the shell while the inside of the plug coupling nut has three (3) bayonet pins. The physical size of the bayonet pins and grooves are two (2) to four (4) times larger than a regular bayonet coupling system.

Near the end of the grooves on the receptacle there is a recess that provides for the locking of the connector. Some manufacturers provide a wear pin at the recess area to reduce wear on the shell at the point of locking.

In order to "lock" the plug and receptacle together, you must have some type of a spring. One manufacturer uses a rubber gasket inside the plug shell under the coupling nut. Over a period of time, the gasket could take a "compression-set" and hence not allow the connector to maintain a positive lock. In order to avoid this, the use of a wave washer is recommended.

The Reverse Bayonet coupling system is sometimes called a "quarter turn" coupling. This, or course, is not correct.

COMPARISON

	Commercial Reverse Bayonet	German VG95234	American AS95234
Back-ground	In the early 1950s Veam, an Italian company (a former licensee of Bendix) began work on a connector for the Railway Industry. At that time the MIL-C-5015 Series was the "standard" connector. They were happy with its performance, but did not like the time required to either mate or disconnect the MIL-C-5015 connectors. After several attempts, Veam developed the Reverse Bayonet coupling which required only a 1/3 turn to either mate or disconnect a connector. Veam still used the MIL-C-5015 insert arrangements and the receptacle shells were more rugged than the MIL-C-5015.	In the late 1950s the German Military wanted a replacement for the MIL-C-5015 connectors they were using. They evaluated the Reverse Bayonet coupling connectors and liked them, but wanted further enhancements. 1. Crimp Contacts. The solder types were too difficult to repair in the field. 2. Higher Push-out forces for the contacts. It is unknown why Veam did not respond to these requirements, but they didn't. Cannon responded and submitted their design. It was accepted and the VG95234 connectors were designed around the Cannon connectors.	In the early 1980's the U.S. Military began using VG95234 connectors for many of their vehicles. The quantity of these connectors being used by the Military has increased every year since then. When U.S. OEMs wanted to make some changes to the Reverse Bayonet specification, they discovered it was difficult to get the department in Germany to make those changes. Hence, several U.S. OEM's believed there should be a U.S. Specification covering the Reverse Bayonet type of connectors. Shown below is a brief summary of the major changes:

Differences		
	German VG95234	**American AS95234**
Plating:	Only Cadmium, Olive Drab is allowed	Other RoHS plating available
Accessory Threads:	None are specified	Be in accordance with AS31551
Backshells:	Not available separately	Be able to use M85049 accessories
Contact Retention:	Rubber Insert retention	Have metal clips imbedded in the insert to hold contacts in place
Insert Selection:	Has 42 inserts available	Uses most in MIL-STD-1651 plus some in the VG

SPACECRAFT COMPONENTS CORP.
3040 Clayton Street
North Las Vegas, NV 89032
Phone: 702.851.7600
Fax: 702.851.7620
Email: salesinfo@spacecraft.com
Web: www.spacecraft.com

REVERSE BAYONET EXPLANATION, HISTORY & COMPARISION

	Commercial Reverse Bayonet	German VG95234	American AS95234
Shells			
Materials	Aluminum, Brass, Stainless Steel	Aluminum	Aluminum, Stainless Steel
Finishes	Cadmium, Olive Drab, Anodize, Plus various RoHS Platings	Cadmium, Olive Drab 500 hour salt spray	All finishes are 500 hour salt spray
Types	Wall Mount Receptacles In-line Receptacles Box Mount Receptacles Jam Nut Receptacles Thru-Bulkhead Receptacles Straight Plugs (EMI/RFI optional) Panel Mount Plugs 90° Plugs (EMI/RFI optional)	Wall Mount Receptacles In-line Receptacles Box Mount Receptacles Thru-Bulkhead Receptacles Straight Plugs (EMI/RFI optional) 90° Plugs (EMI/RFI optional)	Wall Mount Receptacles In-line Receptacles Box Mount Receptacles Jam Nut Receptacles Thru-Bulkhead Receptacles Straight Plugs (EMI/RFI optional)
Backshells	Backshells are not available separately. They are sold mounted to the connector. Connectors come with various backshells whose function is: Strain Relief Threads (conduit adapter) Shrink Boot Adapter	Backshells are not available separately. They are sold mounted to the connector. Connectors come with either a: Strain Relief Threads (conduit adapter) Shrink Boot Adapter EMI/RFI Shrink Boot Adapter	Backshells are not supplied and must be ordered separately. The rear (accessory) threads are per AS31551. Standard backshells are per M85049 series.
Environmental	Connectors can be either environmental or non-environmental, and are supplied with or without a grommet.	All connector configurations are environmental. With the exception of the box mount receptacles, all connectors are supplied with a grommet.	All connector configurations are environmental
Wear Pins in Receptacles "Locking" Indent	Optional	Not Required	Not Required
Accessory Threads at Rear of Shells	The threads at the rear of a connectors shell are not controlled and can vary between manufacturers. Also, the rear grommet and compression ferrule dimensions are not controlled as in MS3155. If a connector backshell is damaged, the entire connector must be replaced.		All rear (accessory) threads are per AS31551 and will accommodate M85049 backshells.

	Commercial Reverse Bayonet	German VG95234	American AS95234
Inserts			
Arrangements	Over 150 insert arrangements are available. Some meet MIL-STD-1651 while others are unique to each manufacturer.	There are 42 insert arrangements in the specification. Some meet MIL-STD-1651 while others are unique to VG95234.	Approved inserts are per MIL-STD-1651 plus 5 from VG95234
Materials	Neoprene, Halogen Free or Silicone	Neoprene	Neoprene on Plastic (Crimp Front Release)
Contact Retention Forces	40 Pounds	50 Pounds	Solder = 40 pounds Crimp = 50 pounds
Contact Retention Method	Rubber as well as a Metal Clip: Front or Rear Release	Rubber, Front Release	Solder = Contacts bonded into Inserts Crimp = Front Release with metal contact retaining clips
Contacts			
Contact Sizes	20, 18, 16, 16S, 12, 8, 4, 1/0, 4/0	20, 16, 16S, 12, 8, 4, 1/0	16, 16S, 12, 8, 4, 1/0
Finishes	Silver or Gold	Silver is the standard finish	Silver or Gold
Thermocouple	Available in sizes 16, 16S, 12 and 8	Not available	Available in sizes 16, 16S, 12 and 8
Types	Crimp, Solder or PCB	Crimp only for metric or AWG wire	Crimp, front Release or Solder and PCB

AS95234 ORDERING INFORMATION

SEE CATALOG 801 FOR DETAILS

AS95234/1 W 18 - 10 P W

MIL SPEC

SHELL STYLE
- **1** In-line receptacle.
- **2** Box mount receptacle front panel mtg.
- **3** Box mount receptacle, rear panel mtg.
- **4** Wall mount receptacle, front panel mtg.
- **5** Wall mount receptacle, rear panel mtg.
- **6** Straight plug.
- **7** Jam nut receptacle.
- **8** Jam nut receptacle w/ accessory threads.
- **9** Straight plug, w/ spring fingers, EMI/RFI.
- **13** Thru-bulkhead receptacle.

FINISH/MATERIAL
See Table below.

SHELL SIZE
10SL, 14S, 16, 16S, 18, 20, 22, 24, 28, 32, 36.

INSERT POLARIZATION
Omit for Normal

CONTACT DESIGNATOR
- **A** Crimp pin contact insert less standard pin contacts.
- **B** Crimp socket contact insert less standard socket contacts.
- **C** Solder cup pin contact.
- **D** Solder cup socket contact.
- **E** Thru-bulkhead fixed pin-pin contact.
- **F** Thru-bulkhead fixed socket-socket contact.
- **G** Thru-bulkhead fixed pin-socket contact, pin facing front of receptacle. (O-Ring seal facing front.)
- **H** Thru-bulkhead fixed socket-pin contact, socket facing front. (O-Ring seal facing front.)
- **P** Crimp pin contact in accordance with M39029/44.
- **S** Crimp socket in accordance with M39029/45.

INSERT ARRANGEMENT
See page 2H-1 thru 2H-34.

FINISH/MATERIAL

Temperature: -55°C to +125°C
Except for "S" which is:-65°C to 175°C

Code	Finish	Material
A	Black Anodize	Aluminum
B	Cadmium, Black	Stainless Steel
S	Passivate	Stainless Steel
W	Cadmium, Olive Drab	Aluminum
X	Fluorocarbon, Nickel	Aluminum

Code	Finish	Material
XS	Fluorocarbon, Nickel	Stainless Steel
Y	Electro Deposited Alum.	Aluminum
YS	Electro Deposited Alum.	Stainless Steel
Z	Zinc Nickel	Aluminum
ZS	Zinc Nickel	Stainless Steel

GERMAN VG95234 ORDERING INFORMATION

OBSOLETE FOR U.S. DESIGN – USE AS95234 SHOWN ABOVE

SHOWN FOR REFERENCE ONLY

VG95234 A 32 - 6 S 1 N

SERIES

SHELL TYPE
See Table I below.

SHELL SIZE
10SL, 14S, 16, 16S, 18, 20, 22, 24, 28, 32, 36.

INSERT CONFIGURATION

POLARIZATION
N (Normal), **W, X, Y, Z.**

WIRE SIZE FOR CONTACTS
- **Blank** Metric.
- **1** AWG.

CONTACT STYLE
- **P** Pin contacts.
- **S** Socket contacts.
- **P/S** For shell typed or C2.

TABLE I

A - Front Panel Mount Square Flange Receptacle – No Accessory Threads	K - 90° Plug with Grounding Fingers without Cable Clamp and Bushing
B1 - Rear Panel Mount Square Flange Receptacle – Threaded Holes	L - Straight Plug with Grounding Fingers without Cable Clamp and Bushing
B2 - Rear Panel Mount Square Flange Receptacle – Thru Holes	M - Straight Plug with EMI Shrink boot Backshell and Grounding Fingers
CI - Bulkhead Feed-Thru Receptacle with Threaded Holes	N1 - Wall Mount Receptacle with EMI Shrink boot Backshell & Threaded Holes
C2- Bulkhead Feed-Thru Receptacle with Thru Holes	N2 - Wall Mount Receptacle with EMI Shrink boot Backshell & Thru Holes
D - Straight Plug with Cable Clamp and Bushing	R1 - Straight Plug for use with VG95218 Wires – EMI/Shrink boot Backshell
E - 90° Plug with Cable Clamp and Bushing	S1 - Wall Mount Connector for VG95218 Wires – EMI/Boot Backshell; Threaded
E1 - 90° Plug without Clamp and Bushing	S2 - Wall Mount Connector for VG95218 Wires – EMI/Boot Backshell; Thru Holes
F - In-line Receptacle with Cable Clamp and Bushing	T - Straight Plug with Shrink Boot Adapter and Grounding Fingers
G - Straight Plug with Shrink Boot Adapter	U1 - Wall Mount Connector – Shrink boot Backshell; Threaded Holes
H - Straight Plug without Cable Clamp and Bushing	U2 - Wall Mount Connector – Shrink boot Backshell; Thru Holes
J1 - Wall Mount Receptacle with Cable Clamp, Bushing and Threaded Holes	
J2 - Wall Mount Receptacle with Cable Clamp, Bushing and Thru Holes	

SPACECRAFT COMPONENTS CORP.
3040 Clayton Street
North Las Vegas, NV 89032
Phone: 702.851.7600
Fax: 702.851.7620
Email: salesinfo@spacecraft.com
Web: www.spacecraft.com

SECTION 1C
AS50151 SERIES 1

REVERSE BAYONET COUPLING

REVERSE BAYONET CONNECTOR QUICK REFERENCE

	BACKSHELLS	GROMMET SEAL	CONDUIT ADAPTER		ONE PIECE STRAIN RELIEF	MS3057*A CLAMP		MS3057*C CLAMP	
			SOLID SHELL	LOCKING SHELL	SOLID SHELL	SOLID SHELL	LOCKING SHELL	SOLID SHELL	LOCKING SHELL
SHELL TYPES	ENVIRONMENTAL, NO GROMMET	ARV	A1	AX1	N/A	N/A	N/A	CF	CFX
	ENVIRONMENTAL WITH GROMMET	RV	R	RX	E	F	FX	CFZ	CFZX
	NON-ENVIRONMENTAL, NO GROMMET	N/A	A	AX	AE	AF	AFX	N/A	N/A
WALL MOUNT RECEPTACLE	SCPB00* FRONT MOUNT	•	•	N/A	•	•	N/A	•	N/A
	SCPB020* FRONT MOUNT	BACKSHELLS NOT SUPPLIED WITH THIS CONFIGURATION OF SHELL							
	SCPB030* REAR MOUNT WITH REAR TEETH	•	•	•	•	•	•	•	•
	SCPB038* REAR MOUNT WITH 90 degree BACKSHELL	USE SCPB030* FOR STRAIGHT BACKSHELLS							
BOX MOUNT RECEPTACLE	SCPB02* FRONT MOUNT (REAR THREADS OPTIONAL)	SINCE THESE SHELLS DO NOT HAVE REAR THREADS, BACKSHELLS CANNOT BE USED							
	SCPB03* REAR MOUNT (REAR THREADS OPTIONAL)								
IN-LINE RECEPTACLE	SCPB01*	•	•		•	•		•	
JAM NUT RECEPTACLE	SCPB070*	•	•	•	•	•	•	•	•
	SCPB07* (LESS REAR THREADS)	SINCE THESE SHELLS DO NOT HAVE REAR THREADS, BACKSHELLS CANNOT BE USED							
PLUG	SCPB06* STRAIGHT	•	•	•	•	•	•	•	•
	SCPB06*GG* RUBBER COVERED COUPLING NUT	•	•	•	•	•	•	•	•
	SCPB065* HEAVY DUTY RIBBED COUPLING NUT	•	•	N/A	•	•	N/A	•	N/A
	SCPB08* 90 degree	USE SCPB06* FOR STRAIGHT BACKSHELLS							
	SCPB08*GG* RUBBER COVERED COUPLING NUT	USE SCPB06* FOR STRAIGHT BACKSHELLS							
PANEL MOUNT PLUG	SCPB064	SINCE THESE SHELLS DO NOT HAVE REAR THREADS, BACKSHELLS CANNOT BE USED							

HEAVY DUTY RIBBED COUPLING NUT

SPACECRAFT COMPONENTS CORP.
3040 Clayton Street
North Las Vegas, NV 89032
Phone: 702.851.7600
Fax: 702.851.7620
Email: salesinfo@spacecraft.com
Web: www.spacecraft.com

REVERSE BAYONET CONNECTOR QUICK REFERENCE

MS3057*C CLAMP (LONG LENGTH)		PIPE THREAD		SHRINK BOOT	SHRINK BOOT	SHRINK BOOT EMI/RFI	CONDUIT ADAPTER	MS3057*A CLAMP	MS3057*C CLAMP
								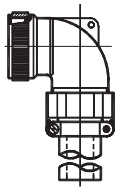	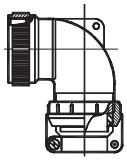
SOLID SHELL	LOCKING SHELL	SOLID SHELL	LOCKING SHELL	SOLID SEAL	LOCKING SHELL	LOCKING SHELL	LOCKING SHELL	LOCKING SHELL	LOCKING SHELL
LCF	LCFX	APT	APTX	AG	AG2G	ASB	08R1	N/A	08CFZ
LCFZ	LCFZX	PT	PTX	G	G2G	SB	08R	08F	08CFZ1
N/A	N/A	N/A	N/A	N/A	N/A	N/A	08A	08AF	N/A
•	N/A	•	N/A	•	N/A	•	NOT RECOMMENDED WITH FRONT MOUNT RECEPTACLE		
→									
•	•	•	•	•	•	•	USE SCPB038*	USE SCPB038*	USE SCPB038*
→							•	•	•
→									
•		•		•		•	NOT RECOMMENDED FOR USE, CONSULT FACTORY.		
•	•	•	•	•	•	•	CONSULT FACTORY FOR PART NUMBERS		
→									
•	•	•	•	•	•	•	USE SCPB08*	USE SCPB08*	USE SCPB08*
•	•	•	•	•	•	•	USE SCPB08*GG*	USE SCPB08*GG*	USE SCPB08*GG*
•	N/A	•	N/A	•	N/A	N/A	N/A	N/A	N/A
→							•	•	•
→							•	•	•
→									

SCPB SERIES

ORDERING INFORMATION

SCPB 00 CFZ 18 - 1 S W F80 XXX

SERIES PREFIX

SCPB	Receptacles with wear pins.
SCPBS	Receptacles without wear pins.
SCPBH	Inserts are Halogen free.
SCPBG06	Plug with EMI/RFI ground spring.

SHELL STYLE
See Table I below.

CLASS
See Table II below.

SHELL SIZE
10SL, 14S, 16S, 16, 18, 20, 22, 24, 28, 32, 36, 40.

INSERT CONFIGURATION

CONTACT STYLE

P	Pin contacts.
R1*	Socket with one (1) Spring. Sizes 8, 4, 1/0, 4/0. See Table IV below.
R2*	Socket with two (2) Springs. Sizes 8, 4, 1/0, 4/0. See Table IV below.
R3*	Socket with three (3) Springs. Sizes 8, 4, 1/0, 4/0. See Table IV below.
S	Socket contacts.
T	Pin for R1, R2 or R3 Sockets. See Table III below.

* Low insertion force and high amperage.

ALTERNATE POSITION (POLARIZATION)
BLANK (normal), **W, X, Y, Z.**

CONTACT TYPE

BLANK	Solder termination.
CR	Metric crimp for DIN wire
CR1	Metric crimp for AWG wire.
F0	Less contacts.
F80	Crimp for AWG wire.

MODIFICATION

-A95	Contacts gold plated per MIL-G-45204 Type II, Class 2 over nickel
-A134	Contacts gold plated per MIL-G-45204 Type II, Class 2 over gold flash per MIL-G-45204 Type I over copper plate per MIL-C-14550, Class 4
-B1	.245 Flat Band SCPSE-02F Included, Shell Sizes 16-40 (See page 1F-49 in Cat. 601)
-B3	.242 Flat Band SCPBE-02F Included, Shell Sizes 16-40 (See page 1F-49 in Cat. 601)
-B5	.118 Flat Band SCPSE-04F Included, Shell Sizes 10SL-16S (See page 1F-49 in Cat. 601)
-B7	.120 Flat Band SCPBE-04F Included, Shell Sizes 10SL-16S (See page 1F-49 in Cat. 601)
-F0	Connector less contacts
-F28	Clinch nut mounting
-F42	Less endbell, grommet and ferrule
-F74	1/16" gaskets under coupling nut
-F80	AWG crimp contacts supplied with but not installed in connector
-F123	Connectors with #16 crimp contacts having #20 AWG wire accommodation
-H	Hex coupling nut
-P	Plastic insulator
-005	Black anodize.
-023	Electroless nickel.
-024	Zinc cobalt, olive drab color.
-027	Zinc cobalt, black color.
-098	Stainless steel, passivated.
-101	Marine bronze,
-142	Contacts: .000030 gold over .000050 nickel.
-989	Zinc nickel, black.
-999	Teflon nickel, non-reflective.

For other codes, contact Sales Dept.

FOR ELECTRICAL CHARACTERISTICS SEE PAGE 3C-2

TABLE I. SHELL STYLE

SHELL STYLE	DESCRIPTION
00	Wall mount receptacle
01	In-line receptacle
01FR	In-line receptacle
02R	Box mount receptacle, front panel mount
020R	Wall mount receptacle less rear accessories
020FR	Wall mount receptacle, front panel mount
03R	Box mount receptacle, rear panel mount
03YM	Box mount receptacle, PC tail rear mount
030	Wall mount receptacle for rear panel mounting
030YM	Wall mount receptacle, PC tail
030FR	Wall mount receptacle
038	90° Wall mount receptacle
06	Straight plug
06FR	Straight plug
064PP	Panel mount plug
064FR	Panel mount plug
065FR	Straight plug
07R	Jam nut receptacle
070	Jam nut receptacle with rear accessory threads
078	Jam nut receptacle with 90° backshell
08	90° plug
TB	Thru-bulkhead receptacle

TABLE II. CLASS

APPLICATION	NON-ENVIRONMENTAL	ENVIRONMENTAL WITH GROMMET	ENVIRONMENTAL NO GROMMET
INDIVIDUAL WIRES	A, ARV, LA, LAF	R, LR, R, RV	APT
	AE, AF, LF	E, F, LF	
JACKETED CABLE	–	CFZ, LCFZ	CF, FR(C), FR(PG), FR(SPB), LCF
	–	WKG	FR(C), FR(PG), FR(SPB), WK, WK3
SHIELDED	–	–	WK1
KELLUMS	–	LC, LC3	LCG, LCG4
PG	–	SL1, SLX1	SL, SLX
SHRINK BOOT	–	G, G2G	AG, AG2G, SV
BANDING	–	ST, SU	STG, SUG, SV
SHIELDED	–	SB, SBF, SBT	ASB, ASBF, ASBT, SV
FLEX CONDUIT			
TYPE CL-P	–	NM	NMG
TYPE EF	–	RK	ARK
METAL CORE	–	CMEG	–
RUBBER HOSE	–	–	BC, LP
PMA	–	TRAC	PIL

TABLE III. PIN CONTACTS

CONNECTOR ORDERING CODE	PIN PART NUMBER	SIZE	FOR WIRE SIZE		RATING
			AWG	MM²	
T	R12-7900-110	8	8	9	100 Amps
T	R12-8500-110	4	4	22	168 Amps
T	R10-9200-110	1/0	1/0	53	304 Amps
T	R10-9798-110	4/0	4/0	107	472 Amps

TABLE IV. SOCKET CONTACTS

CONNECTOR ORDERING CODE	SOCKET PART NUMBER	SIZE	FOR WIRE SIZE		SPRINGS	RATING
			AWG	MM²		
R1	T10-7900-110-1	8	8	9	1	46 Amps
R2	T10-7900-110-2				2	73 Amps
R3	T10-7900-110-3				3	85 Amps
R1	T10-8500-110-1	4	4	22	1	80 Amps
R2	T10-8500-110-2				2	135 Amps
R3	T10-8500-110-3				3	168 Amps
R1	T10-9200-110-1	1/0	1/0	53	1	150 Amps
R2	T10-9200-110-2				2	245 Amps
R3	T10-9200-110-3				3	304 Amps
R1	T10-9795-110-1	4/0	4/0	107	1	225 Amps
R2	T10-9795-110-2				2	350 Amps
R3	T10-9795-110-3				3	500 Amps

SPACECRAFT COMPONENTS CORP.
3040 Clayton Street
North Las Vegas, NV 89032
Phone: 702.851.7600
Fax: 702.851.7620
Email: salesinfo@spacecraft.com
Web: www.spacecraft.com

WALL MOUNT RECEPTACLE, FRONT PANEL MOUNT

00–*

1C

MOUNTING HOLE OPTIONS

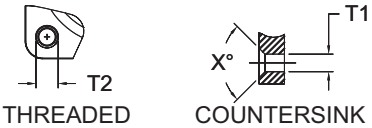

MOUNTING HOLE CODES

CODE	MOUNTING HOLE TYPE
None	Thru holes
FF	Metric thread
UN	UNC thread
FS	Thru holes W/ Metric C'Sink (X=90°)
FSM	Thru holes W/ UN C'Sink (X=82°)

FRONT VIEW

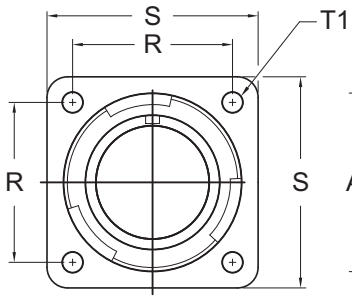

SIDE VIEW

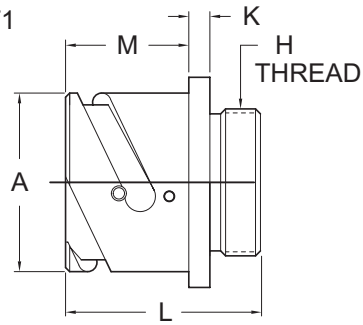

SCPB00-* Non-environmental

SHELL SIZE	FRONT VIEW					SIDE VIEW				
	R ±.004 [±0.1]	S ±.012 [±0.3]	T1 +.004 [+0.1] -.000 [-0.0]	T2 THREAD METRIC	T2 THREAD UNC	A +.000 [+0.00] -.006 [-0.15]	H THREAD CLASS 2A	K ±.008 [±0.2]	L ±.012 [±0.3]	M +.016 [+0.4] -.000 [-0.0]
10SL	.717 [18.20]	1.000 [25.40]	.126 [3.20]	M4	8-32UNC	.717 [18.20]	5/8-24 UNEF	.110 [2.80]	1.087 [27.60]	.559 [14.20]
14S	.906 [23.00]	1.181 [30.00]	.126 [3.20]	M4	8-32UNC	.969 [24.60]	3/4-20 UNEF	.126 [3.20]	1.087 [27.60]	.563 [14.30]
16S	.969 [24.60]	1.280 [32.50]	.126 [3.20]	M4	8-32UNC	1.079 [27.40]	7/8-20 UNEF	.126 [3.20]	1.087 [27.60]	.551 [14.00]
16	.969 [24.60]	1.280 [32.50]	.126 [3.20]	M4	8-32UNC	1.079 [27.40]	7/8-20 UNEF	.126 [3.20]	1.331 [33.80]	.748 [19.00]
18	1.063 [27.00]	1.378 [35.00]	.126 [3.20]	M4	8-32UNC	1.213 [30.80]	1-20 UNEF	.157 [4.00]	1.331 [33.80]	.752 [19.10]
20	1.157 [29.40]	1.496 [38.00]	.126 [3.20]	M4	8-32UNC	1.346 [34.20]	1 1/8-18 UNEF	.157 [4.00]	1.331 [33.80]	.752 [19.10]
22	1.252 [31.80]	1.614 [41.00]	.126 [3.20]	M4	8-32UNC	1.472 [37.40]	1 1/4-18 UNEF	.157 [4.00]	1.331 [33.80]	.748 [19.00]
24	1.374 [34.90]	1.752 [44.50]	.146 [3.70]	M4	10-24UNC	1.610 [40.90]	1 3/8-18 UNEF	.157 [4.00]	1.409 [35.80]	.811 [20.60]
28	1.563 [39.70]	2.000 [50.80]	.146 [3.70]	M5	10-24UNC	1.839 [46.70]	1 5/8-18 UNEF	.157 [4.00]	1.409 [35.80]	.811 [20.60]
32	1.752 [44.50]	2.244 [57.00]	.169 [4.30]	M5	1/4-20UNC	2.102 [53.40]	1 7/8-16 UN	.157 [4.00]	1.469 [37.30]	.874 [22.20]
36	1.937 [49.20]	2.500 [63.50]	.169 [4.30]	M5	1/4-20UNC	2.346 [59.60]	2 1/16-16 UN	.157 [4.00]	1.469 [37.30]	.874 [22.20]
40	2.185 [55.50]	2.752 [69.90]	.169 [4.30]	M5	1/4-20UNC	2.579 [65.50]	2 5/16-16 UNS	.157 [4.00]	1.469 [37.30]	.874 [22.20]

Dimensions are in Inches [mm]

00A*
00R*

MOUNTING HOLE OPTIONS

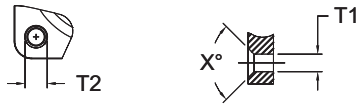

MOUNTING HOLE CODES

CODE	MOUNTING HOLE TYPE
None	Thru holes
FF	Metric thread
UN	UNC thread
FS	Thru holes W/ Metric C'Sink (X=90°)
FSM	Thru holes W/ UN C'Sink (X=82°)

FRONT VIEW

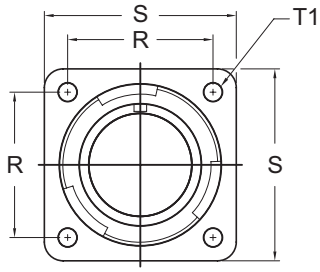

SIDE VIEW

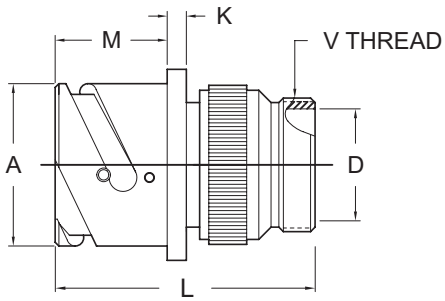

SCPB00A* Non-environmental, no grommet
SCPB00R* Environmental with grommet

SHELL SIZE	FRONT VIEW					SIDE VIEW					
	R ±.004 [±0.1]	S ±.012 [±0.3]	T1 +.004 [+0.1] -.000 [-0.0]	T2 THREAD METRIC	T2 THREAD UNC	A +.000 [+0.00] -.006 [-0.15]	D MIN.	K ±.008 [±0.2]	L MAX.	M +.016 [+0.4] -.000 [-0.0]	V THREAD CLASS 2A
10SL	.717 [18.20]	1.000 [25.40]	.126 [3.20]	M4	8-32UNC	.717 [18.20]	.323 [8.20]	.110 [2.80]	1.693 [43.00]	.559 [14.20]	5/8-24 UNEF
14S	.906 [23.00]	1.181 [30.00]	.126 [3.20]	M4	8-32UNC	.969 [24.60]	.437 [11.10]	.126 [3.20]	1.850 [47.00]	.563 [14.30]	3/4-20 UNEF
16S	.969 [24.60]	1.280 [32.50]	.126 [3.20]	M4	8-32UNC	1.079 [27.40]	.563 [14.30]	.126 [3.20]	1.850 [47.00]	.551 [14.00]	7/8-20 UNEF
16	.969 [24.60]	1.280 [32.50]	.126 [3.20]	M4	8-32UNC	1.079 [27.40]	.563 [14.30]	.126 [3.20]	2.283 [58.00]	.748 [19.00]	7/8-20 UNEF
18	1.063 [27.00]	1.378 [35.00]	.126 [3.20]	M4	8-32UNC	1.213 [30.80]	.657 [16.70]	.157 [4.00]	2.283 [58.00]	.752 [19.10]	1-20 UNEF
20	1.157 [29.40]	1.496 [38.00]	.126 [3.20]	M4	8-32UNC	1.346 [34.20]	.780 [19.80]	.157 [4.00]	2.283 [58.00]	.752 [19.10]	1 3/16-18 UNEF
22	1.252 [31.80]	1.614 [41.00]	.126 [3.20]	M4	8-32UNC	1.472 [37.40]	.780 [19.80]	.157 [4.00]	2.323 [59.00]	.748 [19.00]	1 3/16-18 UNEF
24	1.374 [34.90]	1.752 [44.50]	.146 [3.70]	M4	10-24UNC	1.610 [40.90]	1.000 [25.40]	.157 [4.00]	2.402 [61.00]	.811 [20.60]	1 7/16-18 UNEF
28	1.563 [39.70]	2.000 [50.80]	.146 [3.70]	M5	10-24UNC	1.839 [46.70]	1.063 [27.00]	.157 [4.00]	2.638 [67.00]	.811 [20.60]	1 7/16-18 UNEF
32	1.752 [44.50]	2.244 [57.00]	.169 [4.30]	M5	1/4-20UNC	2.102 [53.40]	1.280 [32.50]	.157 [4.00]	2.795 [71.00]	.874 [22.20]	1 3/4-18 UNS
36	1.937 [49.20]	2.500 [63.50]	.169 [4.30]	M5	1/4-20UNC	2.346 [59.60]	1.406 [35.70]	.157 [4.00]	2.835 [72.00]	.874 [22.20]	2-18 UNS
40	2.185 [55.50]	2.752 [69.90]	.169 [4.30]	M5	1/4-20UNC	2.579 [65.50]	1.772 [45.00]	.157 [4.00]	3.386 [86.00]	.874 [22.20]	2 1/4-16 UN

Dimensions are in Inches [mm]

WALL MOUNT RECEPTACLE, FRONT PANEL MOUNT

00AE*
00E*

MOUNTING HOLE OPTIONS

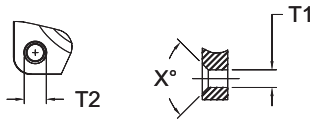

THREADED COUNTERSINK

MOUNTING HOLE CODES

CODE	MOUNTING HOLE TYPE
None	Thru holes
FF	Metric thread
UN	UNC thread
FS	Thru holes W/ Metric C'Sink (X=90°)
FSM	Thru holes W/ UN C'Sink (X=82°)

FRONT VIEW

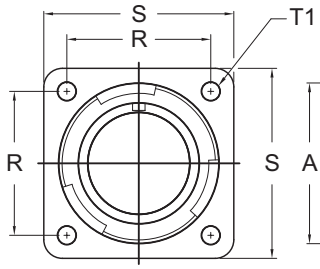

SIDE VIEW

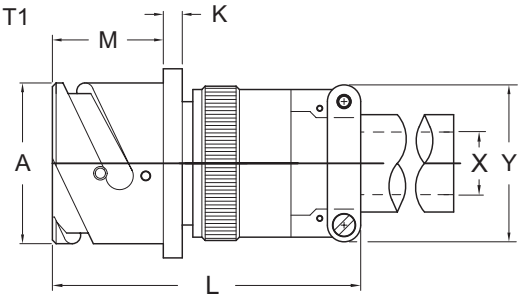

SCPB00AE* **Non-environmental, no grommet**
SCPB00E* **Environmental with grommet**

SHELL SIZE	FRONT VIEW					SIDE VIEW					
	R .004 [±0.1]	S .012 [±0.3]	T1 +.004 [+0.1] -.000 [-0.0]	T2 THREAD METRIC	T2 THREAD UNC	A +.000 [+0.00] -.006 [-0.15]	K ±.008 [±0.2]	L MAX	M +.016 [+0.4] -.000 [-0.0]	X MIN	Y MAX
10SL	.717 [18.20]	1.000 [25.40]	.126 [3.20]	M4	8-32UNC	.717 [18.20]	.110 [2.80]	2.520 [64.00]	.559 [14.20]	.256 [6.50]	0.894 [22.70]
14S	.906 [23.00]	1.181 [30.00]	.126 [3.20]	M4	8-32UNC	.969 [24.60]	.126 [3.20]	2.717 [69.00]	.563 [14.30]	.354 [9.00]	1.083 [27.50]
16S	.969 [24.60]	1.280 [32.50]	.126 [3.20]	M4	8-32UNC	1.079 [27.40]	.126 [3.20]	2.795 [71.00]	.551 [14.00]	.433 [11.00]	1.181 [30.00]
16	.969 [24.60]	1.280 [32.50]	.126 [3.20]	M4	8-32UNC	1.079 [27.40]	.126 [3.20]	3.228 [82.00]	.748 [19.00]	.433 [11.00]	1.181 [30.00]
18	1.063 [27.00]	1.378 [35.00]	.126 [3.20]	M4	8-32UNC	1.213 [30.80]	.157 [4.00]	3.228 [82.00]	.752 [19.10]	.559 [14.20]	1.268 [32.20]
20	1.157 [29.40]	1.496 [38.00]	.126 [3.20]	M4	8-32UNC	1.346 [34.20]	.157 [4.00]	3.228 [82.00]	.752 [19.10]	.622 [15.80]	1.476 [37.50]
22	1.252 [31.80]	1.614 [41.00]	.126 [3.20]	M4	8-32UNC	1.472 [37.40]	.157 [4.00]	3.268 [83.00]	.748 [19.00]	.622 [15.80]	1.476 [37.50]
24	1.374 [34.90]	1.752 [44.50]	.146 [3.70]	M4	10-24UNC	1.610 [40.90]	.157 [4.00]	3.425 [87.00]	.811 [20.60]	.843 [21.40]	1.705 [43.30]
28	1.563 [39.70]	2.000 [50.80]	.146 [3.70]	M5	10-24UNC	1.839 [46.70]	.157 [4.00]	3.661 [93.00]	.811 [20.60]	.843 [21.40]	1.705 [43.30]
32	1.752 [44.50]	2.244 [57.00]	.169 [4.30]	M5	1/4-20UNC	2.102 [53.40]	.157 [4.00]	3.898 [99.00]	.874 [22.20]	1.051 [26.70]	2.035 [51.70]
36	1.937 [49.20]	2.500 [63.50]	.169 [4.30]	M5	1/4-20UNC	2.346 [59.60]	.157 [4.00]	3.937 [100.00]	.874 [22.20]	1.248 [31.70]	2.283 [58.00]
40	2.185 [55.50]	2.752 [69.90]	.169 [4.30]	M5	1/4-20UNC	2.579 [65.50]	.157 [4.00]	5.039 [128.00]	.874 [22.20]	1.374 [34.90]	2.579 [65.50]

Dimensions are in Inches [mm]

00AF*
00F*

MOUNTING HOLE OPTIONS

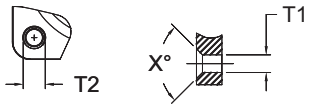

THREADED COUNTERSINK

MOUNTING HOLE CODES

CODE	MOUNTING HOLE TYPE
None	Thru holes
FF	Metric thread
UN	UNC thread
FS	Thru holes W/ Metric C'Sink (X=90°)
FSM	Thru holes W/ UN C'Sink (X=82°)

FRONT VIEW

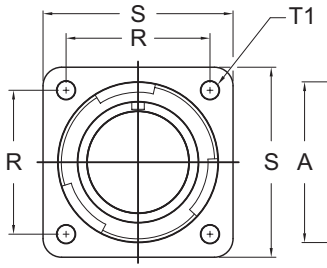

SIDE VIEW

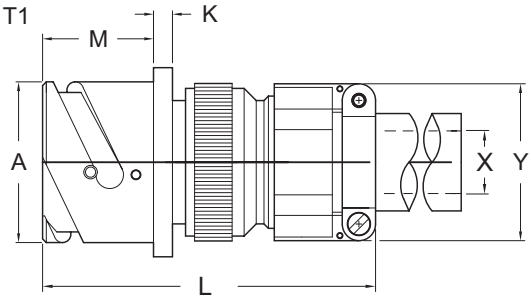

SCPB00AF* **Non-environmental, no grommet**
SCPB00F* **Environmental with grommet**

SHELL SIZE	FRONT VIEW					SIDE VIEW					
	R ±.004 [±0.1]	S ±.012 [±0.3]	T1 +.004 [+0.1] -.000 [-0.0]	T2 THREAD METRIC	T2 THREAD UNC	A +.000 [+0.00] -.006 [-0.15]	K ±.008 [±0.2]	L MAX	M +.016 [+0.4] -.000 [-0.0]	X MIN	Y MAX
10SL	.717 [18.20]	1.000 [25.40]	.126 [3.20]	M4	8-32UNC	.717 [18.20]	.110 [2.80]	2.520 [64.00]	.559 [14.20]	.256 [6.50]	.894 [22.70]
14S	.906 [23.00]	1.181 [30.00]	.126 [3.20]	M4	8-32UNC	.969 [24.60]	.126 [3.20]	2.717 [69.00]	.563 [14.30]	.354 [9.00]	1.083 [27.50]
16S	.969 [24.60]	1.280 [32.50]	.126 [3.20]	M4	8-32UNC	1.079 [27.40]	.126 [3.20]	2.795 [71.00]	.551 [14.00]	.433 [11.00]	1.181 [30.00]
16	.969 [24.60]	1.280 [32.50]	.126 [3.20]	M4	8-32UNC	1.079 [27.40]	.126 [3.20]	3.228 [82.00]	.748 [19.00]	.433 [11.00]	1.181 [30.00]
18	1.063 [27.00]	1.378 [35.00]	.126 [3.20]	M4	8-32UNC	1.213 [30.80]	.157 [4.00]	3.228 [82.00]	.752 [19.10]	.559 [14.20]	1.268 [32.20]
20	1.157 [29.40]	1.496 [38.00]	.126 [3.20]	M4	8-32UNC	1.346 [34.20]	.157 [4.00]	3.228 [82.00]	.752 [19.10]	.622 [15.80]	1.476 [37.50]
22	1.252 [31.80]	1.614 [41.00]	.126 [3.20]	M4	8-32UNC	1.472 [37.40]	.157 [4.00]	3.268 [83.00]	.748 [19.00]	.622 [15.80]	1.476 [37.50]
24	1.374 [34.90]	1.752 [44.50]	.146 [3.70]	M4	10-24UNC	1.610 [40.90]	.157 [4.00]	3.425 [87.00]	.811 [20.60]	.843 [21.40]	1.705 [43.30]
28	1.563 [39.70]	2.000 [50.80]	.146 [3.70]	M5	10-24UNC	1.839 [46.70]	.157 [4.00]	3.661 [93.00]	.811 [20.60]	.843 [21.40]	1.705 [43.30]
32	1.752 [44.50]	2.244 [57.00]	.169 [4.30]	M5	1/4-20UNC	2.102 [53.40]	.157 [4.00]	3.898 [99.00]	.874 [22.20]	1.051 [26.70]	2.035 [51.70]
36	1.937 [49.20]	2.500 [63.50]	.169 [4.30]	M5	1/4-20UNC	2.346 [59.60]	.157 [4.00]	3.937 [100.00]	.874 [22.20]	1.248 [31.70]	2.283 [58.00]
40	2.185 [55.50]	2.752 [69.90]	.169 [4.30]	M5	1/4-20UNC	2.579 [65.50]	.157 [4.00]	5.039 [128.00]	.874 [22.20]	1.374 [34.90]	2.579 [65.50]

Dimensions are in Inches [mm]

SPACECRAFT COMPONENTS CORP.
3040 Clayton Street
North Las Vegas, NV 89032
Phone: 702.851.7600
Fax: 702.851.7620
Email: salesinfo@spacecraft.com
Web: www.spacecraft.com

WALL MOUNT RECEPTACLE, FRONT PANEL MOUNT

00AG*
00G*

1C

MOUNTING HOLE OPTIONS

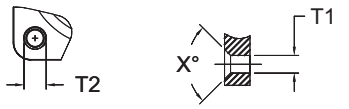

THREADED COUNTERSINK

MOUNTING HOLE CODES

CODE	MOUNTING HOLE TYPE
None	Thru holes
FF	Metric thread
UN	UNC thread
FS	Thru holes W/ Metric C'Sink (X=90°)
FSM	Thru holes W/ UN C'Sink (X=82°)

FRONT VIEW

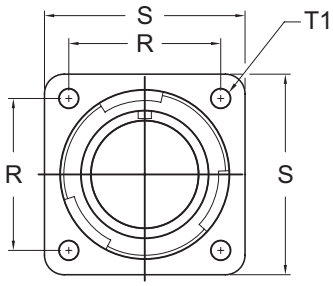

SIDE VIEW

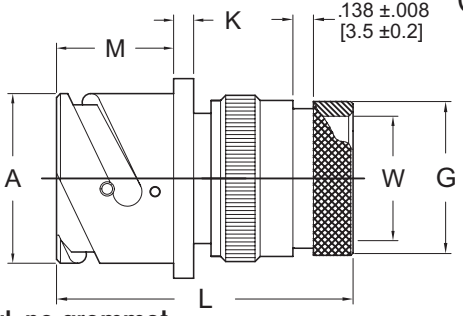

SCPB00AG* **Environmental, no grommet**
SCPB00G* **Environmental with grommet**

SHELL SIZE	FRONT VIEW					SIDE VIEW					
	R ±.004 [±0.1]	S ±.012 [±0.3]	T1 +.004 [+0.1] -.000 [-0.0]	T2 THREAD METRIC	T2 THREAD UNC	A +.000 [+0.00] -.006 [-0.15]	G ±.008 [±0.2]	K ±.008 [±0.2]	L MAX	M +.016 [+0.4] -.000 [-0.0]	W MIN
10SL	.717 [18.20]	1.000 [25.40]	.126 [3.20]	M4	8-32UNC	.717 [18.20]	.610 [15.50]	.110 [2.80]	1.890 [48.00]	.559 [14.20]	.335 [8.50]
14S	.906 [23.00]	1.181 [30.00]	.126 [3.20]	M4	8-32UNC	.969 [24.60]	.752 [19.10]	.126 [3.20]	1.890 [48.00]	.563 [14.30]	.472 [12.00]
16S	.969 [24.60]	1.280 [32.50]	.126 [3.20]	M4	8-32UNC	1.079 [27.40]	.941 [23.90]	.126 [3.20]	1.890 [48.00]	.551 [14.00]	.571 [14.50]
16	.969 [24.60]	1.280 [32.50]	.126 [3.20]	M4	8-32UNC	1.079[27.40]	.941 [23.90]	.126 [3.20]	2.362 [60.00]	.748 [19.00]	.571 [14.50]
18	1.063 [27.00]	1.378 [35.00]	.126 [3.20]	M4	8-32UNC	1.213 [30.80]	.941 [23.90]	.157 [4.00]	2.362 [60.00]	.752 [19.10]	.689 [17.50]
20	1.157 [29.40]	1.496 [38.00]	.126 [3.20]	M4	8-32UNC	1.346 [34.20]	1.165 [29.60]	.157 [4.00]	2.559 [65.00]	.752 [19.10]	.768 [19.50]
22	1.252 [31.80]	1.614 [41.00]	.126 [3.20]	M4	8-32UNC	1.472 [37.40]	1.165 [29.60]	.157 [4.00]	2.559 [65.00]	.748 [19.00]	.866 [22.00]
24	1.374 [34.90]	1.752 [44.50]	.146 [3.70]	M4	10-24UNC	1.610 [40.90]	1.488 [37.80]	.157 [4.00]	2.559 [65.00]	.811 [20.60]	.984 [25.00]
28	1.563 [39.70]	2.000 [50.80]	.146 [3.70]	M5	10-24UNC	1.839 [46.70]	1.488 [37.80]	.157 [4.00]	2.559 [65.00]	.811 [20.60]	1.142 [29.00]
32	1.752 [44.50]	2.244 [57.00]	.169 [4.30]	M5	1/4-20UNC	2.102 [53.40]	1.882 [47.80]	.157 [4.00]	2.756 [70.00]	.874 [22.20]	1.339 [34.00]
36	1.937 [49.20]	2.500 [63.50]	.169 [4.30]	M5	1/4-20UNC	2.346 [59.60]	1.882 [47.80]	.157 [4.00]	2.953 [75.00]	.874 [22.20]	1.516 [38.50]
40	2.185 [55.50]	2.752 [69.90]	.169 [4.30]	M5	1/4-20UNC	2.579 [65.50]	2.063 [52.40]	.157 [4.00]	3.031 [77.00]	.874 [22.20]	1.890 [48.00]

Dimensions are in Inches [mm]

00AG2G*
00G2G*

MOUNTING HOLE OPTIONS

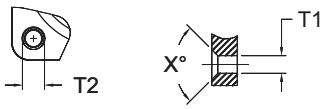

THREADED COUNTERSINK

MOUNTING HOLE CODES

CODE	MOUNTING HOLE TYPE
None	Thru holes
FF	Metric thread
UN	UNC thread
FS	Thru holes W/ Metric C'Sink (X=90°)
FSM	Thru holes W/ UN C'Sink (X=82°)

FRONT VIEW

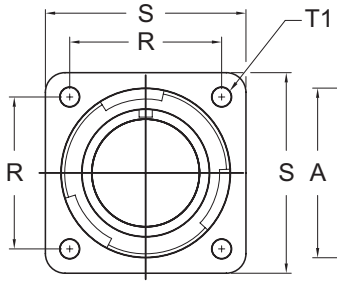

SIDE VIEW

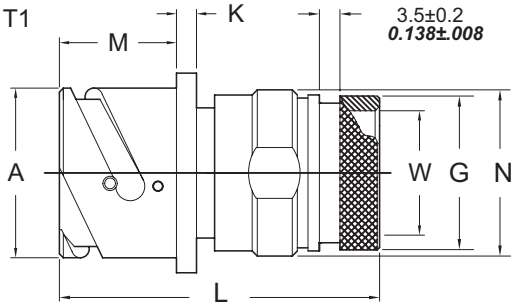

SCPB00AG2G* **Environmental with grommet**
SCPB00G2G* **Environmental, no grommet**

SHELL SIZE	FRONT VIEW					SIDE VIEW						
	R ±.004 [±0.1]	S ±.012 [±0.3]	T1 +.004 [+0.1] -.000 [-0.0]	T2 THREAD METRIC	T2 THREAD UNC	A +.000 [+0.00] -.006 [-0.15]	G ±.008 [±0.2]	K ±.008 [±0.2]	L APRX	M +.016 [+0.4] -.000 [-0.0]	N MAX	W MIN
10SL	.777 [18.20]	1.000 [25.40]	.126 [3.20]	M4	8-32UNC	.717 [18.20]	.610 [15.50]	.110 [2.80]	1.961 [49.80]	.559 [14.20]	.866 [22.00]	.335 [8.50]
14S	.906 [23.00]	1.181 [30.00]	.126 [3.20]	M4	8-32UNC	.969 [24.60]	.752 [19.10]	.126 [3.20]	1.961 [49.80]	.563 [14.30]	.984 [25.00]	.472 [12.00]
16S	.969 [24.60]	1.280 [32.50]	.126 [3.20]	M4	8-32UNC	1.079 [27.40]	.941 [23.90]	.126 [3.20]	1.992 [50.60]	.551 [14.00]	1.102 [28.00]	.571 [14.50]
16	.969 [24.60]	1.280 [32.50]	.126 [3.20]	M4	8-32UNC	1.079 [27.40]	.941 [23.90]	.126 [3.20]	2.366 [60.10]	.748 [19.00]	1.102 [28.00]	.571 [14.50]
18	1.063 [27.00]	1.378 [35.00]	.126 [3.20]	M4	8-32UNC	1.213 [30.80]	.941 [23.90]	.157 [4.00]	2.346 [59.60]	.752 [19.10]	1.220 [31.00]	.689 [17.50]
20	1.157 [29.40]	1.496 [38.00]	.126 [3.20]	M4	8-32UNC	1.346 [34.20]	1.165 [29.60]	.157 [4.00]	2.374 [60.30]	.752 [19.10]	1.378 [35.00]	.768 [19.50]
22	1.252 [31.80]	1.614 [41.00]	.126 [3.20]	M4	8-32UNC	1.472 [37.40]	1.165 [29.60]	.157 [4.00]	2.374 [60.30]	.748 [19.00]	1.496 [38.00]	.866 [22.00]
24	1.374 [34.90]	1.752 [44.50]	.146 [3.70]	M4	10-24UNC	1.610 [40.90]	1.488 [37.80]	.157 [4.00]	2.476 [62.90]	.811 [20.60]	1.614 [41.00]	.984 [25.00]
28	1.563 [39.70]	2.000 [50.80]	.146 [3.70]	M5	10-24UNC	1.839 [46.70]	1.488 [37.80]	.157 [4.00]	2.547 [64.70]	.811 [20.60]	1.890 [48.00]	1.142 [29.00]
32	1.752 [44.50]	2.244 [57.00]	.169 [4.30]	M5	1/4-20UNC	2.102 [53.40]	1.882 [47.80]	.157 [4.00]	2.638 [67.00]	.874 [22.20]	2.126 [54.00]	1.339 [34.00]
36	1.937 [49.20]	2.500 [63.50]	.169 [4.30]	M5	1/4-20UNC	2.346 [59.60]	1.882 [47.80]	.157 [4.00]	2.638 [67.00]	.874 [22.20]	2.402 [61.00]	1.516 [38.50]
40	2.185 [55.50]	2.752 [69.90]	.169 [4.30]	M5	1/4-20UNC	2.579 [65.50]	2.063 [52.40]	.157 [4.00]	2.650 [67.30]	.874 [22.20]	2.677 [68.00]	1.890 [48.00]

Dimensions are in Inches [mm]

WALL MOUNT RECEPTACLE, FRONT PANEL MOUNT

00APT*

MOUNTING HOLE OPTIONS

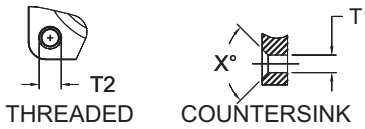

MOUNTING HOLE CODES

CODE	MOUNTING HOLE TYPE
None	Thru holes
FF	Metric thread
UN	UNC thread
FS	Thru holes W/ Metric C'Sink (X=90°)
FSM	Thru holes W/ UN C'Sink (X=82°)

FRONT VIEW

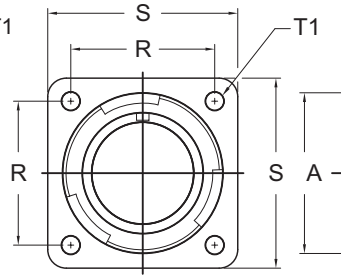

SIDE VIEW

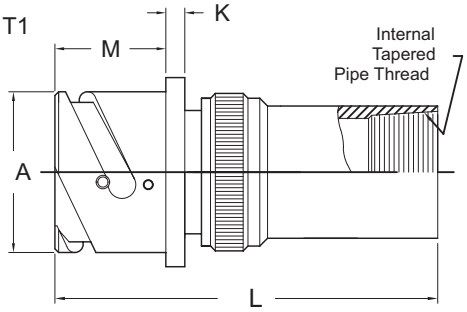

SCPB00APT* **Environmental, no grommet**

SHELL SIZE	FRONT VIEW					SIDE VIEW					
	R ±.004 [±0.1]	S ±.012 [±0.3]	T1 +.004 [+0.1] -.000 [-0.0]	T2 THREAD METRIC	T2 THREAD UNC	A +.000 [+0.00] -.006 [-0.15]	K ±.008 [±0.2]	L MAX	M +.016 [+0.4] -.000 [-0.0]	CODE	PIPE THREAD
10SL	.717 [18.20]	1.000 [25.40]	.126 [3.20]	M4	8-32UNC	.717 [18.20]	.110 [2.80]	2.362 [60.00]	.559 [14.20]	01	1/8
14S	.906 [23.00]	1.181 [30.00]	.126 [3.20]	M4	8-32UNC	.969 [24.60]	.126 [3.20]	2.362 [60.00]	.563 [14.30]	02	1/4
16S	.969 [24.60]	1.280 [32.50]	.126 [3.20]	M4	8-32UNC	1.079 [27.40]	.126 [3.20]	2.362 [60.00]	.551 [14.00]	03	3/8
16	.969 [24.60]	1.280 [32.50]	.126 [3.20]	M4	8-32UNC	1.079 [27.40]	.126 [3.20]	2.756 [70.00]	.748 [19.00]	04	1/2
18	1.063 [27.00]	1.378 [35.00]	.126 [3.20]	M4	8-32UNC	1.213 [30.80]	.157 [4.00]	2.756 [70.00]	.752 [19.10]	05	3/4
20	1.157 [29.40]	1.496 [38.00]	.126 [3.20]	M4	8-32UNC	1.346 [34.20]	.157 [4.00]	2.756 [70.00]	.752 [19.10]	06	1
22	1.252 [31.80]	1.614 [41.00]	.126 [3.20]	M4	8-32UNC	1.472 [37.40]	.157 [4.00]	2.756 [70.00]	.748 [19.00]	07	1 1/4
24	1.374 [34.90]	1.752 [44.50]	.146 [3.70]	M4	10-24UNC	1.610 [40.90]	.157 [4.00]	3.150 [80.00]	.811 [20.60]	08	1 1/2
28	1.563 [39.70]	2.000 [50.80]	.146 [3.70]	M5	10-24UNC	1.839 [46.70]	.157 [4.00]	3.150 [80.00]	.811 [20.60]	09	2
32	1.752 [44.50]	2.244 [57.00]	.169 [4.30]	M5	1/4-20UNC	2.102 [53.40]	.157 [4.00]	3.150 [80.00]	.874 [22.20]	10	2 1/2
36	1.937 [49.20]	2.500 [63.50]	.169 [4.30]	M5	1/4-20UNC	2.346 [59.60]	.157 [4.00]	3.740 [95.00]	.874 [22.20]	–	–
40	2.185 [55.50]	2.752 [69.90]	.169 [4.30]	M5	1/4-20UNC	2.579 [65.50]	.157 [4.00]	3.740 [95.00]	.874 [22.20]	–	–

Dimensions are in Inches [mm]

00ARK*/00RK*

MOUNTING HOLE OPTIONS

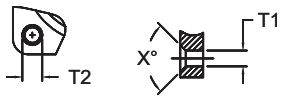

FRONT VIEW

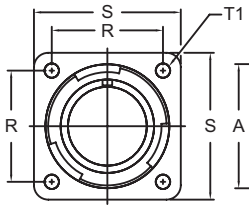

SIDE VIEW

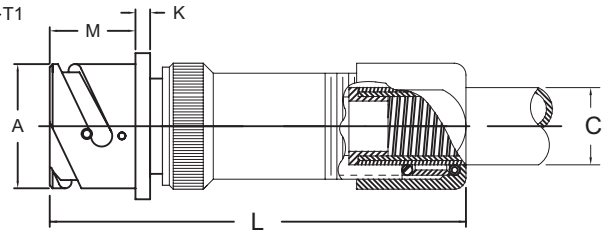

MOUNTING HOLE CODES

CODE	MOUNTING HOLE TYPE
None	Thru holes
FF	Metric thread
UN	UNC thread
FS	Thru holes W/ Metric C'Sink (X=90°)
FSM	Thru holes W/ UN C'Sink (X=82°)

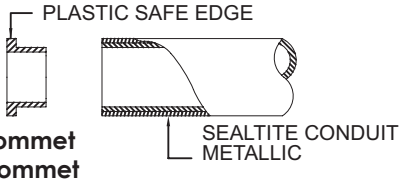

SCPB00ARK* **Environmental less grommet**
SCPB00RK* **Environmental with grommet**

SHELL SIZE	FRONT VIEW					SIDE VIEW			
	R ±.004 [±0.1]	S ±.012 [±0.3]	T1 +.004 [+0.1] -.000 [-0.0]	T2 THREAD METRIC	T2 THREAD UNC	A +.000 [+0.00] -.006 [-0.15]	K ±.008 [±0.2]	L	M +.016 [+0.4] -.000 [-0.0]
10SL	.717 [18.20]	1.000 [25.40]	.126 [3.20]	M4	8-32UNC	.717 [18.20]	.110 [2.80]	Dimension L is dependent on the back-shell used, the cable range and the fitting used. **Consult factory.**	.559 [14.20]
14S	.906 [23.00]	1.181 [30.00]	.126 [3.20]	M4	8-32UNC	.969 [24.60]	.126 [3.20]		.563 [14.30]
16S	.969 [24.60]	1.280 [32.50]	.126 [3.20]	M4	8-32UNC	1.079 [27.40]	.126 [3.20]		.551 [14.00]
16	.969 [24.60]	1.280 [32.50]	.126 [3.20]	M4	8-32UNC	1.079 [27.40]	.126 [3.20]		.748 [19.00]
18	1.063 [27.00]	1.378 [35.00]	.126 [3.20]	M4	8-32UNC	1.213 [30.80]	.157 [4.00]		.752 [19.10]
20	1.157 [29.40]	1.496 [38.00]	.126 [3.20]	M4	8-32UNC	1.346 [34.20]	.157 [4.00]		.752 [19.10]
22	1.252 [31.80]	1.614 [41.00]	.126 [3.20]	M4	8-32UNC	1.472 [37.40]	.157 [4.00]		.748 [19.00]
24	1.374 [34.90]	1.752 [44.50]	.146 [3.70]	M4	10-24UNC	1.610 [40.90]	.157 [4.00]		.811 [20.60]
28	1.563 [39.70]	2.000 [50.80]	.146 [3.70]	M5	10-24UNC	1.839 [46.70]	.157 [4.00]		.811 [20.60]
32	1.752 [44.50]	2.244 [57.00]	.169 [4.30]	M5	1/4-20UNC	2.102 [53.40]	.157 [4.00]		.874 [22.20]
36	1.937 [49.20]	2.500 [63.50]	.169 [4.30]	M5	1/4-20UNC	2.346 [59.60]	.157 [4.00]		.874 [22.20]
40	2.185 [55.50]	2.752 [69.90]	.169 [4.30]	M5	1/4-20UNC	2.579 [65.50]	.157 [4.00]		.874 [22.20]

Dimensions are in Inches [mm]

CODE (***)	AVAILABLE CONDUIT SIZES C
(038)	3/8 [9.52]
(050)	1/2 [12.70]
(075)	3/4 [19.05]
(100)	1 [25.40]
(125)	1 1/4 [31.75]
(150)	1 1/2 [38.10]
(200)	2 [50.80]

(***) Conduit size must be specified as part of the connector part number using conduit code

SPACECRAFT COMPONENTS CORP.
3040 Clayton Street
North Las Vegas, NV 89032
Phone: 702.851.7600
Fax: 702.851.7620
Email: salesinfo@spacecraft.com
Web: www.spacecraft.com

WALL MOUNT RECEPTACLE, FRONT PANEL MOUNT

00ARV*/00RV*

MOUNTING HOLE OPTIONS

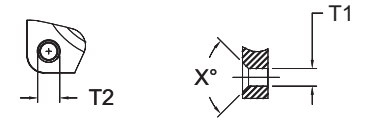

THREADED COUNTERSINK

MOUNTING HOLE CODES

CODE	MOUNTING HOLE TYPE
None	Thru holes
FF	Metric thread
UN	UNC thread
FS	Thru holes W/ Metric C'Sink (X=90°)
FSM	Thru holes W/ UN C'Sink (X=82°)

FRONT VIEW

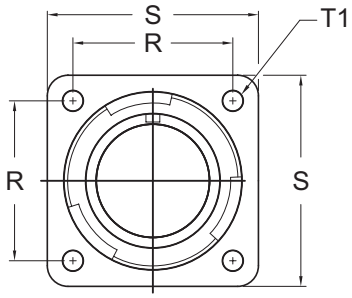

SIDE VIEW

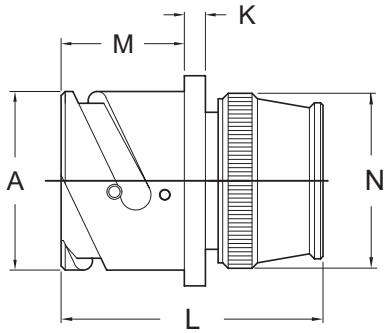

SCPB00ARV* **Non-environmental, no grommet**
SCPB00RV* **Environmental with grommet**

SHELL SIZE	FRONT VIEW					SIDE VIEW				
	R ±.004 [±0.1]	S ±.012 [±0.3]	T1 +.004 [+0.1] -.000 [-0.0]	T2 THREAD METRIC	T2 THREAD UNC	A +.000 [+0.00] -.006 [-0.15]	K ±.008 [±0.2]	L MAX	M +.016 [+0.4] -.000 [-0.0]	N MAX
10SL	.717 [18.20]	1.000 [25.40]	.126 [3.20]	M4	8-32UNC	.717 [18.20]	.110 [2.80]	1.575 [40.00]	.559 [14.20]	.787 [20.00]
14S	.906 [23.00]	1.181 [30.00]	.126 [3.20]	M4	8-32UNC	.969 [24.60]	.126 [3.20]	1.575 [40.00]	.563 [14.30]	.945 [24.00]
16S	.969 [24.60]	1.280 [32.50]	.126 [3.20]	M4	8-32UNC	1.079 [27.40]	.126 [3.20]	1.575 [40.00]	.551 [14.00]	1.024 [26.00]
16	.969 [24.60]	1.280 [32.50]	.126 [3.20]	M4	8-32UNC	1.079 [27.40]	.126 [3.20]	2.205 [56.00]	.748 [19.00]	1.024 [26.00]
18	1.063 [27.00]	1.378 [35.00]	.126 [3.20]	M4	8-32UNC	1.213 [30.80]	.157 [4.00]	2.205 [56.00]	.752 [19.10]	1.161 [29.50]
20	1.157 [29.40]	1.496 [38.00]	.126 [3.20]	M4	8-32UNC	1.346 [34.20]	.157 [4.00]	2.244 [57.00]	.752 [19.10]	1.299 [33.00]
22	1.252 [31.80]	1.614 [41.00]	.126 [3.20]	M4	8-32UNC	1.472 [37.40]	.157 [4.00]	2.244 [57.00]	.748 [19.00]	1.417 [36.00]
24	1.374 [34.90]	1.752 [44.50]	.146 [3.70]	M4	10-24UNC	1.610 [40.90]	.157 [4.00]	2.323 [59.00]	.811 [20.60]	1.575 [40.00]
28	1.563 [39.70]	2.000 [50.80]	.146 [3.70]	M5	10-24UNC	1.839 [46.70]	.157 [4.00]	2.323 [59.00]	.811 [20.60]	1.811 [46.00]
32	1.752 [44.50]	2.244 [57.00]	.169 [4.30]	M5	1/4-20UNC	2.102 [53.40]	.157 [4.00]	2.362 [60.00]	.874 [22.20]	2.028 [51.50]
36	1.937 [49.20]	2.500 [63.50]	.169 [4.30]	M5	1/4-20UNC	2.346 [59.60]	.157 [4.00]	2.362 [60.00]	.874 [22.20]	2.283 [58.00]
40	2.185 [55.50]	2.752 [69.90]	.169 [4.30]	M5	1/4-20UNC	2.579 [65.50]	.157 [4.00]	2.402 [61.00]	.874 [22.20]	2.539 [64.50]

Dimensions are in Inches [mm]

00ASB*/00SB*

MOUNTING HOLE OPTIONS

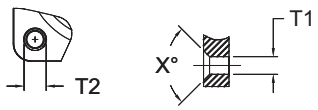

THREADED COUNTERSINK

MOUNTING HOLE CODES

CODE	MOUNTING HOLE TYPE
None	Thru holes
FF	Metric thread
UN	UNC thread
FS	Thru holes W/ Metric C'Sink (X=90°)
FSM	Thru holes W/ UN C'Sink (X=82°)

FRONT VIEW

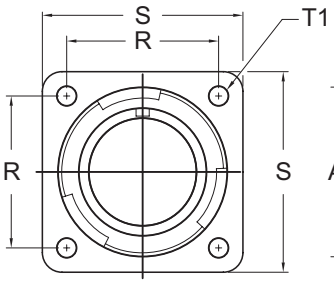

SIDE VIEW

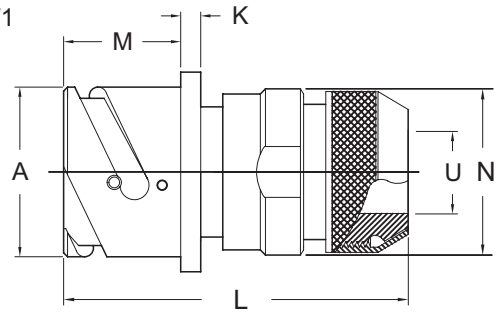

SCPB00ASB* **Environmental, no grommet**
SCPB00SB* **Environmental with grommet**

SHELL SIZE	FRONT VIEW					SIDE VIEW					
	R +004 [±0.1]	S ±.012 [±0.3]	T1 +.004 [+0.1] -.000 [-0.0]	T2 THREAD METRIC	T2 THREAD UNC	A +.000 [+0.00] -.006 [-0.15]	K ±.008 [±0.2]	L MAX	M +.016 [+0.4] -.000 [-0.0]	N MAX	U MIN
10SL	.717 [18.20]	1.000 [25.40]	.126 [3.20]	M4	8-32UNC	.717 [18.20]	.110 [2.80]	2.055 [52.20]	.559 [14.20]	.866 [22.00]	.339 [8.60]
14S	.906 [23.00]	1.181 [30.00]	.126 [3.20]	M4	8-32UNC	.969 [24.60]	.126 [3.20]	2.055 [52.20]	.563 [14.30]	.984 [25.00]	.417 [10.60]
16S	.969 [24.60]	1.280 [32.50]	.126 [3.20]	M4	8-32UNC	1.079 [27.40]	.126 [3.20]	2.134 [54.20]	.551 [14.00]	1.102 [28.00]	.531 [13.50]
16	.969 [24.60]	1.280 [32.50]	.126 [3.20]	M4	8-32UNC	1.079 [27.40]	.126 [3.20]	2.492 [63.30]	.748 [19.00]	1.102 [28.00]	.531 [13.50]
18	1.063 [27.00]	1.378 [35.00]	.126 [3.20]	M4	8-32UNC	1.213 [30.80]	.157 [4.00]	2.539 [64.50]	.752 [19.10]	1.220 [31.00]	.575 [14.60]
20	1.157 [29.40]	1.496 [38.00]	.126 [3.20]	M4	8-32UNC	1.346 [34.20]	.157 [4.00]	2.539 [64.50]	.752 [19.10]	1.378 [35.00]	.728 [18.50]
22	1.252 [31.80]	1.614 [41.00]	.126 [3.20]	M4	8-32UNC	1.472 [37.40]	.157 [4.00]	2.539 [64.50]	.748 [19.00]	1.496 [38.00]	.819 [20.80]
24	1.374 [34.90]	1.752 [44.50]	.146 [3.70]	M4	10-24UNC	1.610 [40.90]	.157 [4.00]	2.567 [65.20]	.811 [20.60]	1.614 [41.00]	.969 [24.60]
28	1.563 [39.70]	2.000 [50.80]	.146 [3.70]	M5	10-24UNC	1.839 [46.70]	.157 [4.00]	2.567 [65.20]	.811 [20.60]	1.890 [48.00]	1.063 [27.00]
32	1.752 [44.50]	2.244 [57.00]	.169 [4.30]	M5	1/4-20UNC	2.102 [53.40]	.157 [4.00]	2.630 [66.80]	.874 [22.20]	2.126 [54.00]	1.311 [33.30]
36	1.937 [49.20]	2.500 [63.50]	.169 [4.30]	M5	1/4-20UNC	2.346 [59.60]	.157 [4.00]	2.630 [66.80]	.874 [22.20]	2.402 [61.00]	1.516 [38.50]
40	2.185 [55.50]	2.752 [69.90]	.169 [4.30]	M5	1/4-20UNC	2.579 [65.50]	.157 [4.00]	2.630 [66.80]	.874 [22.20]	2.677 [68.00]	1.811 [46.00]

Dimensions are in Inches [mm]

WALL MOUNT RECEPTACLE, FRONT PANEL MOUNT

00ASBF*/00SBF*

MOUNTING HOLE OPTIONS

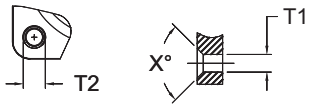

THREADED COUNTERSINK

MOUNTING HOLE CODES

CODE	MOUNTING HOLE TYPE
None	Thru holes
FF	Metric thread
UN	UNC thread
FS	Thru holes W/ Metric C'Sink (X=90°)
FSM	Thru holes W/ UN C'Sink (X=82°)

FRONT VIEW

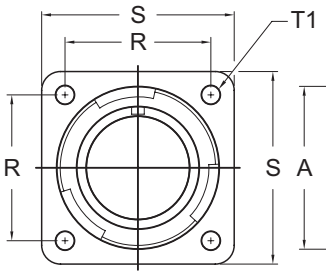

SIDE VIEW

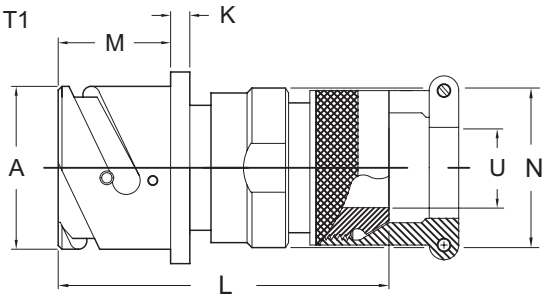

SCPB00ASBF* **Environmental, no grommet**
SCPB00SBF* **Environmental with grommet**

SHELL SIZE	FRONT VIEW					SIDE VIEW					
	R ±.004 [±0.1]	S ±.012 [±0.3]	T1 +.004 [+0.1] -.000 [-0.0]	T2 THREAD METRIC	T2 THREAD UNC	A +.000 [+0.00] -.006 [-0.15]	K ±.008 [±0.2]	L MAX	M +.016 [+0.4] -.000 [-0.0]	N MAX	U MIN
10SL	.717 [18.20]	1.000 [25.40]	.126 [3.20]	M4	8-32UNC	.717 [18.20]	.110 [2.80]	2.055 [52.20]	.559 [14.20]	.866 [22.00]	.339 [8.60]
14S	.906 [23.00]	1.181 [30.00]	.126 [3.20]	M4	8-32UNC	.969 [24.60]	.126 [3.20]	2.055 [52.20]	.563 [14.30]	.984 [25.00]	.417 [10.60]
16S	.969 [24.60]	1.280 [32.50]	.126 [3.20]	M4	8-32UNC	1.079 [27.40]	.126 [3.20]	2.134 [54.20]	.551 [14.00]	1.102 [28.00]	.531 [13.50]
16	.969 [24.60]	1.280 [32.50]	.126 [3.20]	M4	8-32UNC	1.079 [27.40]	.126 [3.20]	2.492 [63.30]	.748 [19.00]	1.102 [28.00]	.531 [13.50]
18	1.063 [27.00]	1.378 [35.00]	.126 [3.20]	M4	8-32UNC	1.213 [30.80]	.157 [4.00]	2.539 [64.50]	.752 [19.10]	1.220 [31.00]	.575 [14.60]
20	1.157 [29.40]	1.496 [38.00]	.126 [3.20]	M4	8-32UNC	1.346 [34.20]	.157 [4.00]	2.539 [64.50]	.752 [19.10]	1.378 [35.00]	.728 [18.50]
22	1.252 [31.80]	1.614 [41.00]	.126 [3.20]	M4	8-32UNC	1.472 [37.40]	.157 [4.00]	2.539 [64.50]	.748 [19.00]	1.496 [38.00]	.819 [20.80]
24	1.374 [34.90]	1.752 [44.50]	.146 [3.70]	M4	10-24UNC	1.610 [40.90]	.157 [4.00]	2.567 [65.20]	.811 [20.60]	1.614 [41.00]	.969 [24.60]
28	1.563 [39.70]	2.000 [50.80]	.146 [3.70]	M5	10-24UNC	1.839 [46.70]	.157 [4.00]	2.567 [65.20]	.811 [20.60]	1.890 [48.00]	1.063 [27.00]
32	1.752 [44.50]	2.244 [57.00]	.169 [4.30]	M5	1/4-20UNC	2.102 [53.40]	.157 [4.00]	2.630 [66.80]	.874 [22.20]	2.126 [54.00]	1.311 [33.30]
36	1.937 [49.20]	2.500 [63.50]	.169 [4.30]	M5	1/4-20UNC	2.346 [59.60]	.157 [4.00]	2.630 [66.80]	.874 [22.20]	2.402 [61.00]	1.516 [38.50]
40	2.185 [55.50]	2.752 [69.90]	.169 [4.30]	M5	1/4-20UNC	2.579 [65.50]	.157 [4.00]	2.630 [66.80]	.874 [22.20]	2.677 [68.00]	1.811 [46.00]

Dimensions are in Inches [mm]

00ASBT*/00SBT*

MOUNTING HOLE OPTIONS

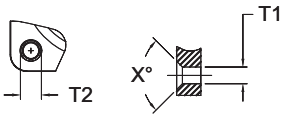

THREADED COUNTERSINK

MOUNTING HOLE CODES

CODE	MOUNTING HOLE TYPE
None	Thru holes
FF	Metric thread
UN	UNC thread
FS	Thru holes W/ Metric C'Sink (X=90°)
FSM	Thru holes W/ UN C'Sink (X=82°)

FRONT VIEW

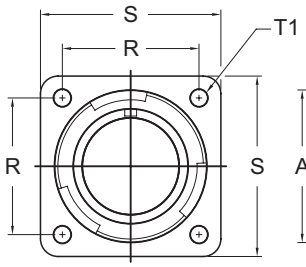

SIDE VIEW

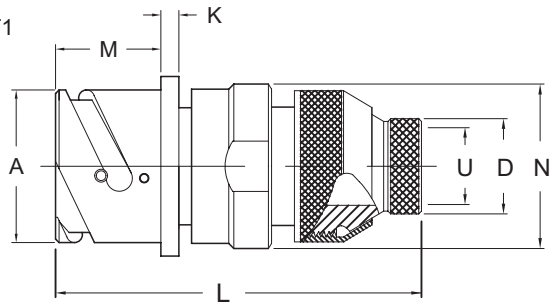

SCPB00ASBT* **Non-environmental, no grommet**
SCPB00SBT* **Environmental with grommet**

SHELL SIZE	FRONT VIEW					SIDE VIEW						
	R ±.004 [±0.1]	S ±.012 [±0.3]	T1 +.004 [+0.1] -.000 [-0.0]	T2 THREAD METRIC	T2 THREAD UNC	A +.000 [+0.00] -.006 [-0.15]	D MAX	K ±.008 [±0.2]	L MAX	M +.016 [+0.4] -.000 [-0.0]	N MAX	U MIN
10SL	.717 [18.20]	1.000 [25.40]	.126 [3.20]	M4	8-32UNC	.717 [18.20]	.437 [11.10]	.110 [2.80]	2.402 [61.00]	.559 [14.20]	.866 [22.00]	.299 [7.60]
14S	.906 [23.00]	1.181 [30.00]	.126 [3.20]	M4	8-32UNC	.969 [24.60]	.563 [14.30]	.126 [3.20]	2.520 [64.00]	.563 [14.30]	.984 [25.00]	.425 [10.80]
16S	.969 [24.60]	1.280 [32.50]	.126 [3.20]	M4	8-32UNC	1.079 [27.40]	.626 [15.90]	.126 [3.20]	2.756 [70.00]	.551 [14.00]	1.102 [28.00]	.488 [12.40]
16	.969 [24.60]	1.280 [32.50]	.126 [3.20]	M4	8-32UNC	1.079 [27.40]	.626 [15.90]	.126 [3.20]	3.150 [80.00]	.748 [19.00]	1.102 [28.00]	.488 [12.40]
18	1.063 [27.00]	1.378 [35.00]	.126 [3.20]	M4	8-32UNC	1.213 [30.80]	.752 [19.10]	.157 [4.00]	3.150 [80.00]	.752 [19.10]	1.220 [31.00]	.614 [15.60]
20	1.157 [29.40]	1.496 [38.00]	.126 [3.20]	M4	8-32UNC	1.346 [34.20]	.878 [22.30]	.157 [4.00]	3.150 [80.00]	.752 [19.10]	1.378 [35.00]	.736 [18.70]
22	1.252 [31.80]	1.614 [41.00]	.126 [3.20]	M4	8-32UNC	1.472 [37.40]	1.000 [25.40]	.157 [4.00]	3.150 [80.00]	.748 [19.00]	1.496 [38.00]	.862 [21.90]
24	1.374 [34.90]	1.752 [44.50]	.146 [3.70]	M4	10-24UNC	1.610 [40.90]	1.126 [28.60]	.157 [4.00]	3.150 [80.00]	.811 [20.60]	1.614 [41.00]	.988 [25.10]
28	1.563 [39.70]	2.000 [50.80]	.146 [3.70]	M5	10-24UNC	1.839 [46.70]	1.252 [31.80]	.157 [4.00]	3.150 [80.00]	.811 [20.60]	1.890 [48.00]	1.114 [28.30]
32	1.752 [44.50]	2.244 [57.00]	.169 [4.30]	M5	1/4-20UNC	2.102 [53.40]	1.441 [36.60]	.157 [4.00]	3.150 [80.00]	.874 [22.20]	2.126 [54.00]	1.114 [28.30]
36	1.937 [49.20]	2.500 [63.50]	.169 [4.30]	M5	1/4-20UNC	2.346 [59.60]	1.752 [44.50]	.157 [4.00]	3.346 [85.00]	.874 [22.20]	2.402 [61.00]	1.614 [41.00]
40	2.185 [55.50]	2.752 [69.90]	.169 [4.30]	M5	1/4-20UNC	2.579 [65.50]	2.000 [50.80]	.157 [4.00]	3.346 [85.00]	.874 [22.20]	2.677 [68.00]	1.598 [40.60]

Dimensions are in Inches [mm]
1. Dimension "L" will vary from the values indicated for some special insert configurations.

SPACECRAFT COMPONENTS CORP.
3040 Clayton Street
North Las Vegas, NV 89032
Phone: 702.851.7600
Fax: 702.851.7620
Email: salesinfo@spacecraft.com
Web: www.spacecraft.com

WALL MOUNT RECEPTACLE, FRONT PANEL MOUNT

00CF*/00CFZ*

MOUNTING HOLE OPTIONS

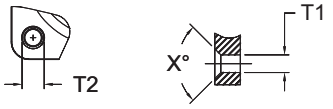

THREADED COUNTERSINK

MOUNTING HOLE CODES

CODE	MOUNTING HOLE TYPE
None	Thru holes
FF	Metric thread
UN	UNC thread
FS	Thru holes W/ Metric C'Sink (X=90°)
FSM	Thru holes W/ UN C'Sink (X=82°)

FRONT VIEW

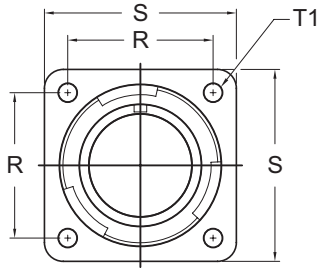

SIDE VIEW

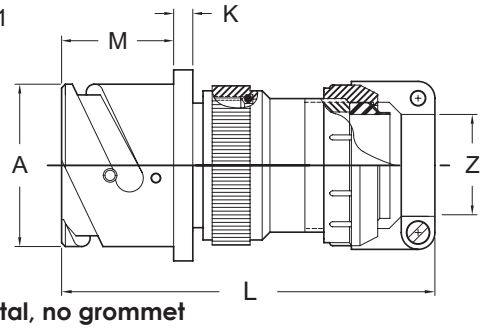

SCPB00CF* **Environmental, no grommet**
SCPB00CFZ* **Environmental with grommet**

SHELL SIZE	FRONT VIEW					SIDE VIEW					
	R ±.004 [±0.1]	S ±.012 [±0.3]	T1 +.004 [+0.1] -.000 [-0.0]	T2 THREAD METRIC	T2 THREAD UNC	A +.000 [+0.00] -.006 [-0.15]	K ±.008 [±0.2]	L MAX	M +.016 [+0.4] -.000 [-0.0]	Z OPEN	Z CLOSED
10SL	.717 [18.20]	1.000 [25.40]	.126 [3.20]	M4	8-32UNC	.717 [18.20]	.110 [2.80]	2.874 [73.00]	.559 [14.20]	.312 [7.93]	.094 [2.38]
14S	.906 [23.00]	1.181 [30.00]	.126 [3.20]	M4	8-32UNC	.969 [24.60]	.126 [3.20]	3.031 [77.00]	.563 [14.30]	.438 [11.12]	.230 [5.84]
16S	.969 [24.60]	1.280 [32.50]	.126 [3.20]	M4	8-32UNC	1.079 [27.40]	.126 [3.20]	3.031 [77.00]	.551 [14.00]	.531 [13.48]	.315 [8.00]
16	.969 [24.60]	1.280 [32.50]	.126 [3.20]	M4	8-32UNC	1.079 [27.40]	.126 [3.20]	3.465 [88.00]	.748 [19.00]	.531 [13.48]	.315 [8.00]
18	1.063 [27.00]	1.378 [35.00]	.126 [3.20]	M4	8-32UNC	1.213 [30.80]	.157 [4.00]	3.583 [91.00]	.752 [19.10]	.625 [15.87]	.378 [9.60]
20	1.157 [29.40]	1.496 [38.00]	.126 [3.20]	M4	8-32UNC	1.346 [34.20]	.157 [4.00]	3.583 [91.00]	.752 [19.10]	.748 [19.00]	.445 [11.30]
22	1.252 [31.80]	1.614 [41.00]	.126 [3.20]	M4	8-32UNC	1.472 [37.40]	.157 [4.00]	3.622 [92.00]	.748 [19.00]	.748 [19.00]	.445 [11.30]
24	1.374 [34.90]	1.752 [44.50]	.146 [3.70]	M4	10-24UNC	1.610 [40.90]	.157 [4.00]	3.819 [97.00]	.811 [20.60]	.937 [23.80]	.610 [15.50]
28	1.563 [39.70]	2.000 [50.80]	.146 [3.70]	M5	10-24UNC	1.839 [46.70]	.157 [4.00]	4.055 [103.00]	.811 [20.60]	.937 [23.80]	.610 [15.50]
32	1.752 [44.50]	2.244 [57.00]	.169 [4.30]	M5	1/4-20UNC	2.102 [53.40]	.157 [4.00]	4.449 [113.00]	.874 [22.20]	1.250 [31.75]	.921 [23.40]
36	1.937 [49.20]	2.500 [63.50]	.169 [4.30]	M5	1/4-20UNC	2.346 [59.60]	.157 [4.00]	4.724 [120.00]	.874 [22.20]	1.378 [35.00]	.921 [23.40]
40	2.185 [55.50]	2.752 [69.90]	.169 [4.30]	M5	1/4-20UNC	2.579 [65.50]	.157 [4.00]	5.315 [135.00]	.874 [22.20]	1.624 [41.25]	1.177 [29.90]

Dimensions are in Inches [mm]

00CMEG*

MOUNTING HOLE OPTIONS

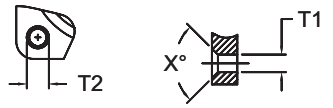

THREADED COUNTERSINK

MOUNTING HOLE CODES

CODE	MOUNTING HOLE TYPE
None	Thru holes
FF	Metric thread
UN	UNC thread
FS	Thru holes W/ Metric C'Sink (X=90°)
FSM	Thru holes W/ UN C'Sink (X=82°)

FRONT VIEW

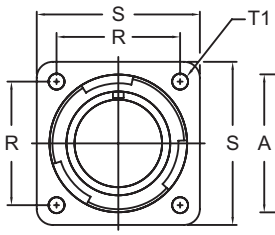

SIDE VIEW

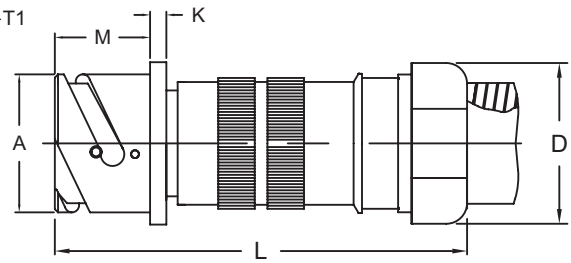

SCPB00CMEG* **Environmental with grommet**

SHELL SIZE	FRONT VIEW					SIDE VIEW			
	R ±.004 [±0.1]	S ±.012 [±0.3]	T1 +.004 [+0.1] -.000 [-0.0]	T2 THREAD METRIC	T2 THREAD UNC	A +.000 [+0.00] -.006 [-0.15]	K ±.008 [±0.2]	L	M +.016 [+0.4] -.000 [-0.0]
10SL	.717 [18.20]	1.000 [25.40]	.126 [3.20]	M4	8-32UNC	.717 [18.20]	.110 [2.80]	Dimension L is dependent on the back-shell used, the cable range and the fitting used. **Consult factory.**	.559 [14.20]
14S	.906 [23.00]	1.181 [30.00]	.126 [3.20]	M4	8-32UNC	.969 [24.60]	.126 [3.20]		.563 [14.30]
16S	.969 [24.60]	1.280 [32.50]	.126 [3.20]	M4	8-32UNC	1.079 [27.40]	.126 [3.20]		.551 [14.00]
16	.969 [24.60]	1.280 [32.50]	.126 [3.20]	M4	8-32UNC	1.079 [27.40]	.126 [3.20]		.748 [19.00]
18	1.063 [27.00]	1.378 [35.00]	.126 [3.20]	M4	8-32UNC	1.213 [30.80]	.157 [4.00]		.752 [19.10]
20	1.157 [29.40]	1.496 [38.00]	.126 [3.20]	M4	8-32UNC	1.346 [34.20]	.157 [4.00]		.752 [19.10]
22	1.252 [31.80]	1.614 [41.00]	.126 [3.20]	M4	8-32UNC	1.472 [37.40]	.157 [4.00]		.748 [19.00]
24	1.374 [34.90]	1.752 [44.50]	.146 [3.70]	M4	10-24UNC	1.610 [40.90]	.157 [4.00]		.811 [20.60]
28	1.563 [39.70]	2.000 [50.80]	.146 [3.70]	M5	10-24UNC	1.839 [46.70]	.157 [4.00]		.811 [20.60]
32	1.752 [44.50]	2.244 [57.00]	.169 [4.30]	M5	1/4-20UNC	2.102 [53.40]	.157 [4.00]		.874 [22.20]
36	1.937 [49.20]	2.500 [63.50]	.169 [4.30]	M5	1/4-20UNC	2.346 [59.60]	.157 [4.00]		.874 [22.20]
40	2.185 [55.50]	2.752 [69.90]	.169 [4.30]	M5	1/4-20UNC	2.579 [65.50]	.157 [4.00]		.874 [22.20]

Dimensions are in Inches [mm]

CONDUIT SIZE			
CABLE CODE	ELECTRI-FLEX CONDUIT TRADE SIZE	SHELL SIZE	D APRX.
075	3/4	20	1.65 [41.9]
		24	
		36	
100	100	20	1.88 [47.6]

FOR OTHER SIZES CONSULT FACTORY

WALL MOUNT RECEPTACLE, FRONT PANEL MOUNT

00LA*/00LR*

MOUNTING HOLE OPTIONS

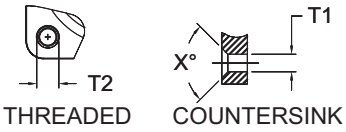

MOUNTING HOLE CODES

CODE	MOUNTING HOLE TYPE
None	Thru holes
FF	Metric thread
UN	UNC thread
FS	Thru holes W/ Metric C'Sink (X=90°)
FSM	Thru holes W/ UN C'Sink (X=82°)

FRONT VIEW

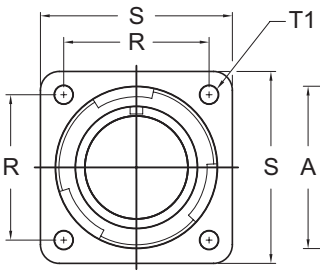

SIDE VIEW

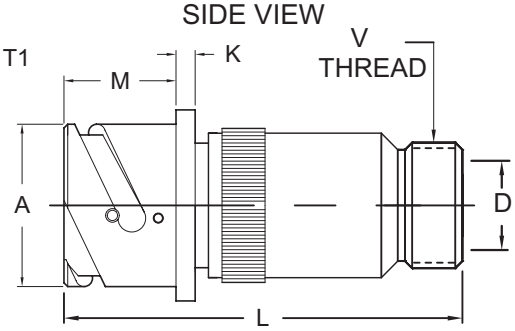

SCPB00LA* Non-environmental, no grommet
SCPB00LR* Environmental with grommet

SHELL SIZE	FRONT VIEW					SIDE VIEW					
	R ±.004 [±0.1]	S ±.012 [±0.3]	T1 +.004 [+0.1] -.000 [-0.0]	T2 THREAD METRIC	T2 THREAD UNC	A +.000 [+0.00] -.006 [-0.15]	D MIN.	K ±.008 [±0.2]	L MAX.	M +.016 [+0.4] -.000 [-0.0]	V THREAD CLASS 2A
10SL	.717 [18.20]	1.000 [25.40]	.126 [3.20]	M4	8-32UNC	.717 [18.20]	.323 [8.20]	.110 [2.80]	2.795 [71.00]	.559 [14.20]	5/8-24 UNEF
14S	.906 [23.00]	1.181 [30.00]	.126 [3.20]	M4	8-32UNC	.969 [24.60]	.437 [11.10]	.126 [3.20]	2.795 [71.00]	.563 [14.30]	3/4-20 UNEF
16S	.969 [24.60]	1.280 [32.50]	.126 [3.20]	M4	8-32UNC	1.079 [27.40]	.563 [14.30]	.126 [3.20]	2.795 [71.00]	.551 [14.00]	7/8-20 UNEF
16	.969 [24.60]	1.280 [32.50]	.126 [3.20]	M4	8-32UNC	1.079 [27.40]	.563 [14.30]	.126 [3.20]	3.425 [87.00]	.748 [19.00]	7/8-20 UNEF
18	1.063 [27.00]	1.378 [35.00]	.126 [3.20]	M4	8-32UNC	1.213 [30.80]	.657 [16.70]	.157 [4.00]	3.425 [87.00]	.752 [19.10]	1-20 UNEF
20	1.157 [29.40]	1.496 [38.00]	.126 [3.20]	M4	8-32UNC	1.346 [34.20]	.780 [19.80]	.157 [4.00]	3.425 [87.00]	.752 [19.10]	1 3/16-18 UNEF
22	1.252 [31.80]	1.614 [41.00]	.126 [3.20]	M4	8-32UNC	1.472 [37.40]	.780 [19.80]	.157 [4.00]	3.425 [87.00]	.748 [19.00]	1 3/16-18 UNEF
24	1.374 [34.90]	1.752 [44.50]	.146 [3.70]	M4	10-24UNC	1.610 [40.90]	1.000 [25.40]	.157 [4.00]	3.425 [87.00]	.811 [20.60]	1 7/16-18 UNEF
28	1.563 [39.70]	2.000 [50.80]	.146 [3.70]	M5	10-24UNC	1.839 [46.70]	1.063 [27.00]	.157 [4.00]	3.740 [95.00]	.811 [20.60]	1 7/16-18 UNEF
32	1.752 [44.50]	2.244 [57.00]	.169 [4.30]	M5	1/4-20UNC	2.102 [53.40]	1.280 [32.50]	.157 [4.00]	3.740 [95.00]	.874 [22.20]	1 3/4-18 UNS
36	1.937 [49.20]	2.500 [63.50]	.169 [4.30]	M5	1/4-20UNC	2.346 [59.60]	1.406 [35.70]	.157 [4.00]	3.740 [95.00]	.874 [22.20]	2-18 UNS
40	2.185 [55.50]	2.752 [69.90]	.169 [4.30]	M5	1/4-20UNC	2.579 [65.50]	1.772 [45.00]	.157 [4.00]	3.740 [95.00]	.874 [22.20]	2 1/4-16 UN

Dimensions are in Inches [mm]

00LAF*/00LF*

MOUNTING HOLE OPTIONS

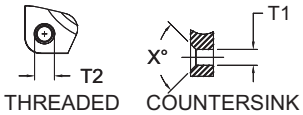

MOUNTING HOLE CODES

CODE	MOUNTING HOLE TYPE
None	Thru holes
FF	Metric thread
UN	UNC thread
FS	Thru holes W/ Metric C'Sink (X=90°)
FSM	Thru holes W/ UN C'Sink (X=82°)

FRONT VIEW

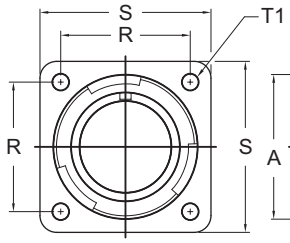

SIDE VIEW

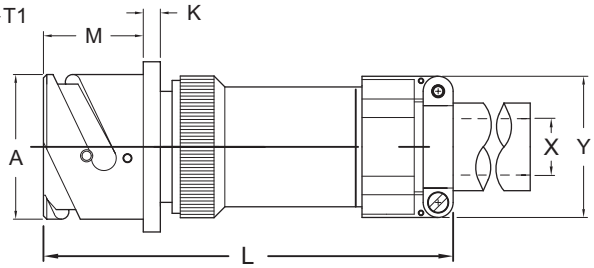

SCPB00LAF* Non-environmental, no grommet
SCPB00LF* Environmental with grommet

SHELL SIZE	FRONT VIEW					SIDE VIEW					
	R ±.004 [±0.1]	S ±.012 [±0.3]	T1 +.004 [+0.1] -.000 [-0.0]	T2 THREAD METRIC	T2 THREAD UNC	A +.000 [+0.00] -.006 [-0.15]	K ±.008 [±0.2]	L MAX	M +.016 [+0.4] -.000 [-0.0]	X MIN	Y MAX
10SL	.717 [18.20]	1.000 [25.40]	.126 [3.20]	M4	8-32UNC	.717 [18.20]	.110 [2.80]	3.622 [92.00]	.559 [14.20]	.220 [5.60]	.894 [22.70]
14S	.906 [23.00]	1.181 [30.00]	.126 [3.20]	M4	8-32UNC	.969 [24.60]	.126 [3.20]	3.661 [93.00]	.563 [14.30]	.311 [7.90]	1.083 [27.50]
16S	.969 [24.60]	1.280 [32.50]	.126 [3.20]	M4	8-32UNC	1.079 [27.40]	.126 [3.20]	3.740 [95.00]	.551 [14.00]	.433 [11.00]	1.181 [30.00]
16	.969 [24.60]	1.280 [32.50]	.126 [3.20]	M4	8-32UNC	1.079 [27.40]	.126 [3.20]	4.370 [111.00]	.748 [19.00]	.433 [11.00]	1.181 [30.00]
18	1.063 [27.00]	1.378 [35.00]	.126 [3.20]	M4	8-32UNC	1.213 [30.80]	.157 [4.00]	4.370 [111.00]	.752 [19.10]	.559 [14.20]	1.268 [32.20]
20	1.157 [29.40]	1.496 [38.00]	.126 [3.20]	M4	8-32UNC	1.346 [34.20]	.157 [4.00]	4.370 [111.00]	.752 [19.10]	.622 [15.80]	1.476 [37.50]
22	1.252 [31.80]	1.614 [41.00]	.126 [3.20]	M4	8-32UNC	1.472 [37.40]	.157 [4.00]	4.370 [111.00]	.748 [19.00]	.622 [15.80]	1.476 [37.50]
24	1.374 [34.90]	1.752 [44.50]	.146 [3.70]	M4	10-24UNC	1.610 [40.90]	.157 [4.00]	4.449 [113.00]	.811 [20.60]	.748 [19.00]	1.705 [43.30]
28	1.563 [39.70]	2.000 [50.80]	.146 [3.70]	M5	10-24UNC	1.839 [46.70]	.157 [4.00]	4.764 [121.00]	.811 [20.60]	.748 [19.00]	1.705 [43.30]
32	1.752 [44.50]	2.244 [57.00]	.169 [4.30]	M5	1/4-20UNC	2.102 [53.40]	.157 [4.00]	4.843 [123.00]	.874 [22.20]	.937 [23.80]	2.035 [51.70]
36	1.937 [49.20]	2.500 [63.50]	.169 [4.30]	M5	1/4-20UNC	2.346 [59.60]	.157 [4.00]	4.921 [125.00]	.874 [22.20]	1.248 [31.70]	2.283 [58.00]
40	2.185 [55.50]	2.752 [69.90]	.169 [4.30]	M5	1/4-20UNC	2.579 [65.50]	.157 [4.00]	5.433 [138.00]	.874 [22.20]	1.374 [34.90]	2.579 [65.50]

Dimensions are in Inches [mm]

SPACECRAFT COMPONENTS CORP.
3040 Clayton Street
North Las Vegas, NV 89032
Phone: 702.851.7600
Fax: 702.851.7620
Email: salesinfo@spacecraft.com
Web: www.spacecraft.com

WALL MOUNT RECEPTACLE, FRONT PANEL MOUNT

00LCG*/00LC*

FRONT VIEW

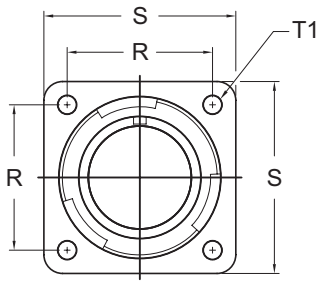

SIDE VIEW

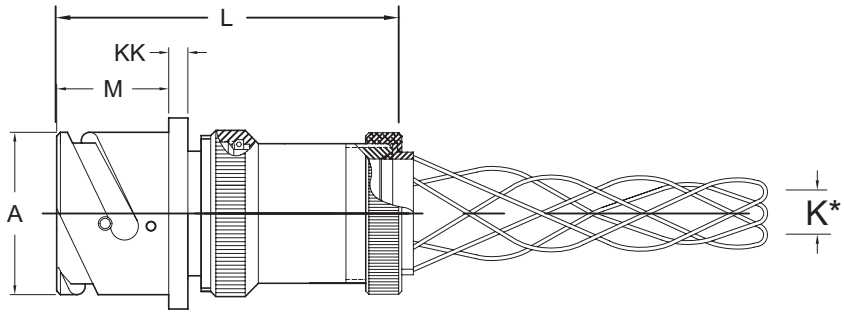

MOUNTING HOLE OPTIONS

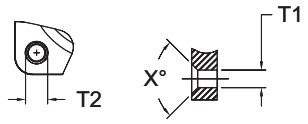

THREADED COUNTERSINK

MOUNTING HOLE CODES

CODE	MOUNTING HOLE TYPE
None	Thru holes
FF	Metric thread
UN	UNC thread
FS	Thru holes W/ Metric C'Sink (X=90°)
FSM	Thru holes W/ UN C'Sink (X=82°)

SCPB00LCG* **Environmental, no grommet**
SCPB00LC* **Environmental with grommet**

SHELL SIZE	FRONT VIEW					SIDE VIEW			
	R ±.004 [±0.1]	S ±.012 [±0.3]	T1 +.004 [+0.1] -.000 [-0.0]	T2 THREAD METRIC	T2 THREAD UNC	A +.000 [+0.00] -.006 [-0.15]	KK ±.008 [±0.2]	L1 MAX	M +.016 [+0.4] -.000 [-0.0]
10SL	.717 [18.20]	1.000 [25.40]	.126 [3.20]	M4	8-32UNC	.717 [18.20]	.110 [2.80]	3.937 [100.0]	.559 [14.20]
14S	.906 [23.00]	1.181 [30.00]	.126 [3.20]	M4	8-32UNC	.969 [24.60]	.126 [3.20]	3.937 [100.0]	.563 [14.30]
16S	.969 [24.60]	1.280 [32.50]	.126 [3.20]	M4	8-32UNC	1.079 [27.40]	.126 [3.20]	3.937 [100.0]	.551 [14.00]
16	.969 [24.60]	1.280 [32.50]	.126 [3.20]	M4	8-32UNC	1.079 [27.40]	.126 [3.20]	4.331 [110.0]	.748 [19.00]
18	1.063 [27.00]	1.378 [35.00]	.126 [3.20]	M4	8-32UNC	1.213 [30.80]	.157 [4.00]	4.331 [110.0]	.752 [19.10]
20	1.157 [29.40]	1.496 [38.00]	.126 [3.20]	M4	8-32UNC	1.346 [34.20]	.157 [4.00]	4.567 [116.0]	.752 [19.10]
22	1.252 [31.80]	1.614 [41.00]	.126 [3.20]	M4	8-32UNC	1.472 [37.40]	.157 [4.00]	4.567 [116.0]	.748 [19.00]
24	1.374 [34.90]	1.752 [44.50]	.146 [3.70]	M4	10-24UNC	1.610 [40.90]	.157 [4.00]	4.724 [120.0]	.811 [20.60]
28	1.563 [39.70]	2.000 [50.80]	.146 [3.70]	M5	10-24UNC	1.839 [46.70]	.157 [4.00]	5.079 [129.0]	.811 [20.60]
32	1.752 [44.50]	2.244 [57.00]	.169 [4.30]	M5	1/4-20UNC	2.102 [53.40]	.157 [4.00]	5.709 [145.0]	.874 [22.20]
36	1.937 [49.20]	2.500 [63.50]	.169 [4.30]	M5	1/4-20UNC	2.346 [59.60]	.157 [4.00]	5.709 [145.0]	.874 [22.20]
40	2.185 [55.50]	2.752 [69.90]	.169 [4.30]	M5	1/4-20UNC	2.579 [65.50]	.157 [4.00]	5.709 [145.0]	.874 [22.20]

Dimensions are in Inches [mm]
1. Dimension "L" will vary from the values indicated with escalating or de-escalating backshells and some special insert configurations.

CABLE RANGE		
K*	MIN	MAX
K0	.250 [6.35]	.375 [9.53]
K1	.375 [9.53]	.500 [12.70]
K2	.500 [12.70]	.625 [15.87]
K3	.625 [15.87]	.750 [19.05]
K4	.750 [19.05]	.875 [22.23]
K5	.875 [22.23]	1.000 [25.40]
K6	1.000 [25.40]	1.120 [28.45]
K7	1.120 [28.45]	1.250 [31.75]
K8	1.290 [32.77]	1.500 [38.10]
K9	1.560 [39.62]	1.625 [41.28]
K10	1.625 [41.28]	1.750 [44.45]

WALL MOUNT RECEPTACLE, FRONT PANEL MOUNT

00LCF*/00LCFZ*

MOUNTING HOLE OPTIONS

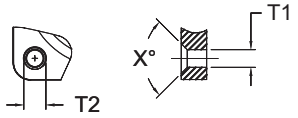

THREADED COUNTERSINK

MOUNTING HOLE CODES

CODE	MOUNTING HOLE TYPE
None	Thru holes
FF	Metric thread
UN	UNC thread
FS	Thru holes W/ Metric C'Sink (X=90°)
FSM	Thru holes W/ UN C'Sink (X=82°)

FRONT VIEW

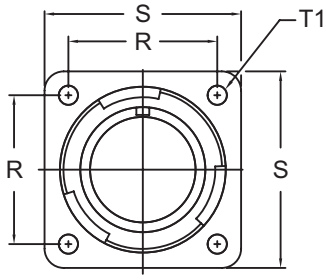

SIDE VIEW

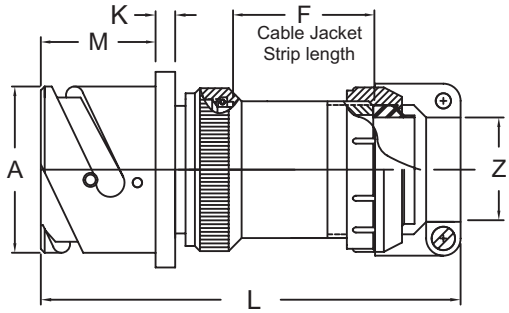

SCPB00LCF* **Environmental, no grommet**
SCPB00LCFZ* **Environmental with grommet**

SHELL SIZE	FRONT VIEW					SIDE VIEW						
	R ±.004 [±0.1]	S ±.012 [±0.3]	T1 +.004 [+0.1] -.000 [-0.0]	T2 THREAD METRIC	T2 THREAD UNC	A +.000 [+0.00] -.006 [-0.15]	F REF	K ±.008 [±0.2]	L MAX	M +.016 [+0.4] -.000 [-0.0]	Z OPEN	Z CLOSED
10SL	.717 [18.20]	1.000 [25.40]	.126 [3.20]	M4	8-32UNC	.717 [18.20]	1.654 [42.00]	.110 [2.80]	3.976 [101.0]	.559 [14.20]	.312 [7.93]	.094 [2.38]
14S	.906 [23.00]	1.181 [30.00]	.126 [3.20]	M4	8-32UNC	.969 [24.60]	1.677 [42.60]	.126 [3.20]	3.976 [101.0]	.563 [14.30]	.438 [11.12]	.230 [5.84]
16S	.969 [24.60]	1.280 [32.50]	.126 [3.20]	M4	8-32UNC	1.079 [27.40]	1.677 [42.60]	.126 [3.20]	3.976 [101.0]	.551 [14.00]	.531 [13.48]	.315 [8.00]
16	.969 [24.60]	1.280 [32.50]	.126 [3.20]	M4	8-32UNC	1.079 [27.40]	1.677 [42.60]	.126 [3.20]	4.488 [114.0]	.748 [19.00]	.531 [13.48]	.315 [8.00]
18	1.063 [27.00]	1.378 [35.00]	.126 [3.20]	M4	8-32UNC	1.213 [30.80]	1.803 [45.80]	.157 [4.00]	4.685 [119.0]	.752 [19.10]	.625 [15.87]	.378 [9.60]
20	1.157 [29.40]	1.496 [38.00]	.126 [3.20]	M4	8-32UNC	1.346 [34.20]	1.807 [45.90]	.157 [4.00]	4.685 [119.0]	.752 [19.10]	.748 [19.00]	.445 [11.30]
22	1.252 [31.80]	1.614 [41.00]	.126 [3.20]	M4	8-32UNC	1.472 [37.40]	1.807 [45.90]	.157 [4.00]	4.685 [119.0]	.748 [19.00]	.748 [19.00]	.445 [11.30]
24	1.374 [34.90]	1.752 [44.50]	.146 [3.70]	M4	10-24UNC	1.610 [40.90]	1.752 [44.50]	.157 [4.00]	4.882 [124.0]	.811 [20.60]	.937 [23.80]	.610 [15.50]
28	1.563 [39.70]	2.000 [50.80]	.146 [3.70]	M5	10-24UNC	1.839 [46.70]	1.949 [49.50]	.157 [4.00]	5.118 [130.0]	.811 [20.60]	.937 [23.80]	.610 [15.50]
32	1.752 [44.50]	2.244 [57.00]	.169 [4.30]	M5	1/4-20UNC	2.102 [53.40]	1.953 [49.60]	.157 [4.00]	5.394 [137.0]	.874 [22.20]	1.250 [31.75]	.921 [23.40]
36	1.937 [49.20]	2.500 [63.50]	.169 [4.30]	M5	1/4-20UNC	2.346 [59.60]	1.969 [50.00]	.157 [4.00]	5.669 [144.0]	.874 [22.20]	1.378 [35.00]	.921 [23.40]
40	2.185 [55.50]	2.752 [69.90]	.169 [4.30]	M5	1/4-20UNC	2.579 [65.50]	1.969 [50.00]	.157 [4.00]	5.669 [144.0]	.874 [22.20]	1.624 [41.25]	1.177 [29.90]

Dimensions are in Inches [mm]

00NMG*/00NM*

MOUNTING HOLE OPTIONS

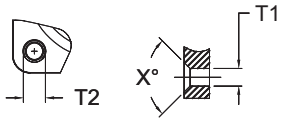

THREADED COUNTERSINK

MOUNTING HOLE CODES

CODE	MOUNTING HOLE TYPE
None	Thru holes
FF	Metric thread
UN	UNC thread
FS	Thru holes W/ Metric C'Sink (X=90°)
FSM	Thru holes W/ UN C'Sink (X=82°)

FRONT VIEW

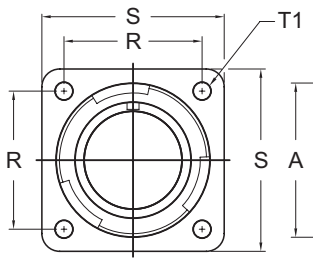

SIDE VIEW

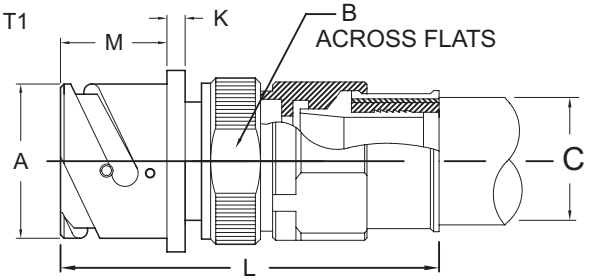

SCPB00NMG* **Environmental, no grommet**
SCPB00NM* **Environmental with grommet**

SHELL SIZE	FRONT VIEW					SIDE VIEW				
	R ±.004 [±0.1]	S ±.012 [±0.3]	T1 +.004 [+0.1] -.000 [-0.0]	T2 THREAD METRIC	T2 THREAD UNC	A +.000 [+0.00] -.006 [-0.15]	B ACROSS FLATS	K ±.008 [±0.2]	L	M +.016 [+0.4] -.000 [-0.0]
10SL	.717 [18.20]	1.000 [25.40]	.126 [3.20]	M4	8-32UNC	.717 [18.20]	.701 [17.80]	.110 [2.80]	Dimension L on conduit size used with each shell size. **Consult factory.**	.559 [14.20]
14S	.906 [23.00]	1.181 [30.00]	.126 [3.20]	M4	8-32UNC	.969 [24.60]	.937 [23.80]	.126 [3.20]		.563 [14.30]
16S	.969 [24.60]	1.280 [32.50]	.126 [3.20]	M4	8-32UNC	1.079 [27.40]	1.000 [25.40]	.126 [3.20]		.551 [14.00]
16	.969 [24.60]	1.280 [32.50]	.126 [3.20]	M4	8-32UNC	1.079 [27.40]	1.000 [25.40]	.126 [3.20]		.748 [19.00]
18	1.063 [27.00]	1.378 [35.00]	.126 [3.20]	M4	8-32UNC	1.213 [30.80]	1.126 [28.60]	.157 [4.00]		.752 [19.10]
20	1.157 [29.40]	1.496 [38.00]	.126 [3.20]	M4	8-32UNC	1.346 [34.20]	1.248 [31.70]	.157 [4.00]		.752 [19.10]
22	1.252 [31.80]	1.614 [41.00]	.126 [3.20]	M4	8-32UNC	1.472 [37.40]	1.374 [34.90]	.157 [4.00]		.748 [19.00]
24	1.374 [34.90]	1.752 [44.50]	.146 [3.70]	M4	10-24UNC	1.610 [40.90]	1.500 [38.10]	.157 [4.00]		.811 [20.60]
28	1.563 [39.70]	2.000 [50.80]	.146 [3.70]	M5	10-24UNC	1.839 [46.70]	1.748 [44.40]	.157 [4.00]		.811 [20.60]
32	1.752 [44.50]	2.244 [57.00]	.169 [4.30]	M5	1/4-20UNC	2.102 [53.40]	2.000 [50.80]	.157 [4.00]		.874 [22.20]
36	1.937 [49.20]	2.500 [63.50]	.169 [4.30]	M5	1/4-20UNC	2.346 [59.60]	2.248 [57.10]	.157 [4.00]		.874 [22.20]
40	2.185 [55.50]	2.752 [69.90]	.169 [4.30]	M5	1/4-20UNC	2.579 [65.50]	2.437 [61.90]	.157 [4.00]		.874 [22.20]

Dimensions are in Inches [mm]

CODE (***)	AVAILABLE CONDUIT SIZES C
(038)	3/8 [9.52]
(050)	1/2 [12.70]
(075)	3/4 [19.05]
(100)	1 [25.40]
(125)	1 1/4 [31.75]
(150)	1 1/2 [38.10]
(200)	2 [50.80]

SPACECRAFT COMPONENTS CORP.
3040 Clayton Street
North Las Vegas, NV 89032
Phone: 702.851.7600
Fax: 702.851.7620
Email: salesinfo@spacecraft.com
Web: www.spacecraft.com

WALL MOUNT RECEPTACLE, FRONT PANEL MOUNT

00SL*/00SL1*

MOUNTING HOLE OPTIONS

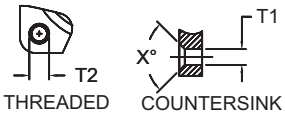

MOUNTING HOLE CODES

CODE	MOUNTING HOLE TYPE
None	Thru holes
FF	Metric thread
UN	UNC thread
FS	Thru holes W/ Metric C'Sink (X=90°)
FSM	Thru holes W/ UN C'Sink (X=82°)

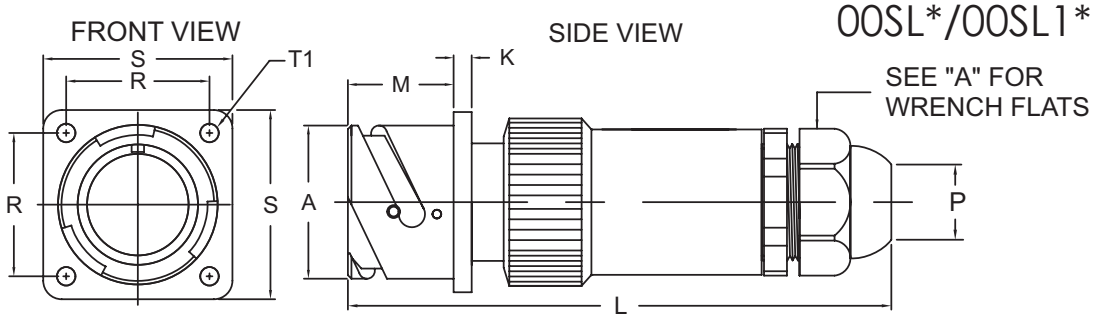

SCPB00SL* Environmental, no grommet
SCPB00SL1* Environmental with grommet

SHELL SIZE	FRONT VIEW					SIDE VIEW			
	R 1.004 [±0.1]	S 1.012 [±0.3]	T1 +.004 [+0.1] -.000 [-0.0]	T2 THREAD METRIC	T2 THREAD UNC	A +.000 [+0.00] -.006 [-0.15]	K ±.008 [±0.2]	L	M +.016 [+0.4] -.000 [-0.0]
10SL	.717 [18.20]	1.000 [25.40]	.126 [3.20]	M4	8-32UNC	.717 [18.20]	.110 [2.80]	Dimension L is dependent on the backshell, the cable range and the fitting used. **Consult factory.**	.559 [14.20]
14S	.906 [23.00]	1.181 [30.00]	.126 [3.20]	M4	8-32UNC	.969 [24.60]	.126 [3.20]		.559 [14.20]
16S	.969 [24.60]	1.280 [32.50]	.126 [3.20]	M4	8-32UNC	1.079 [27.40]	.126 [3.20]		.559 [14.20]
16	.969 [24.60]	1.280 [32.50]	.126 [3.20]	M4	8-32UNC	1.079 [27.40]	.126 [3.20]		.748 [19.00]
18	1.063 [27.00]	1.378 [35.00]	.126 [3.20]	M4	8-32UNC	1.213 [30.80]	.157 [4.00]		.748 [19.00]
20	1.157 [29.40]	1.496 [38.00]	.126 [3.20]	M4	8-32UNC	1.346 [34.20]	.157 [4.00]		.748 [19.00]
22	1.252 [31.80]	1.614 [41.00]	.126 [3.20]	M4	8-32UNC	1.472 [37.40]	.157 [4.00]		.748 [19.00]
24	1.374 [34.90]	1.752 [44.50]	.146 [3.70]	M4	10-24UNC	1.610 [40.90]	.157 [4.00]		.811 [20.60]
28	1.563 [39.70]	2.000 [50.80]	.146 [3.70]	M5	10-24UNC	1.839 [46.70]	.157 [4.00]		.811 [20.60]
32	1.752 [44.50]	2.244 [57.00]	.169 [4.30]	M5	1/4-20UNC	2.102 [53.40]	.157 [4.00]		.874 [22.20]
36	1.937 [49.20]	2.500 [63.50]	.169 [4.30]	M5	1/4-20UNC	2.346 [59.60]	.157 [4.00]		.874 [22.20]
40	2.185 [55.50]	2.752 [69.90]	.169 [4.30]	M5	1/4-20UNC	2.579 [65.50]	.157 [4.00]		.874 [22.20]

Dimensions are in Inches [mm]

CABLE RANGE CODE

(XX) CABLE CODE NO STRAIN RELIEF	TYPE	P CABLE RANGE	A WRENCH FLATS
07R	PG7	0.08-0.20 [2.0-5.0]	.591 [15.0]
07	PG7	0.12-0.26 [3.0-6.5]	.591 [15.0]
09R	PG9	0.08-0.24 [2.0-6.0]	.748 [19.0]
09	PG9	0.16-0.31 [4.0-8.0]	.748 [19.0]
11R	PG11	0.12-0.28 [3.0-7.0]	.866 [22.0]
11	PG11	0.20-0.39 [5.0-10.0]	.866 [22.0]
13R	PG13.5	0.20-0.35 [5.0-9.0]	.945 [24.0]
13	PG13.5	0.24-0.47 [6.0-12.0]	.945 [24.0]
16R	PG16	0.28-0.47 [7.0-12.0]	1.063 [27.0]
16	PG16	0.39-0.55 [10.0-14.0]	1.063 [27.0]
21R	PG21	0.35-0.63 [9.0-16.0]	1.299 [33.0]
21	PG21	0.51-0.71 [13.0-18.0]	1.299 [33.0]
29R	PG29	0.47-0.79 [12.0-20.0]	1.654 [42.0]
29	PG29	0.71-0.98 [18.0-25.0]	1.654 [42.0]
36R	PG36	0.79-1.02 [20.0-26.0]	2.087 [53.0]
36	PG36	0.87-1.26 [22.0-32.0]	2.087 [53.0]
42	PG42	1.18-1.50 [30.0-38.0]	2.362 [60.0]
48	PG48	1.34-1.73 [34.0-44.0]	2.559 [65.0]

Dimensions are in Inches [mm]

00SLX*/00SLX1*

MOUNTING HOLE OPTIONS

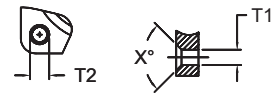

MOUNTING HOLE CODES

CODE	MOUNTING HOLE TYPE
None	Thru holes
FF	Metric thread
UN	UNC thread
FS	Thru holes W/ Metric C'Sink (X=90°)
FSM	Thru holes W/ UN C'Sink (X=82°)

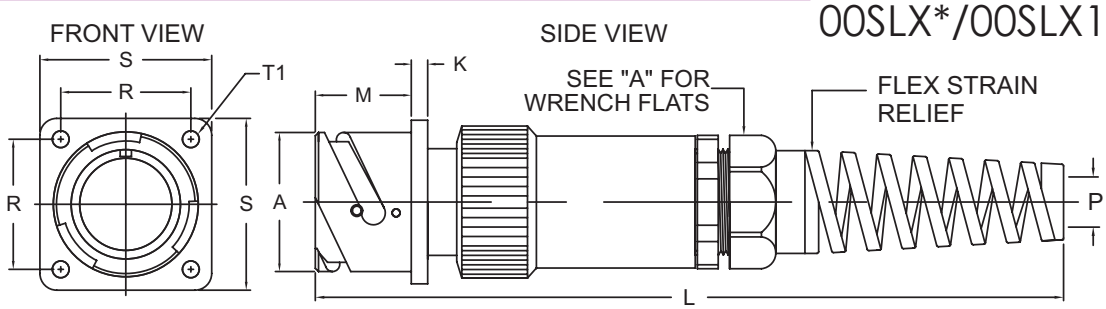

SCPB00SLX* Environmental, no grommet
SCPB00SLX1* Environmental with grommet

SHELL SIZE	FRONT VIEW					SIDE VIEW			
	R 1.004 [±0.1]	S 1.012 [±0.3]	T1 +.004 [+0.1] -.000 [-0.0]	T2 THREAD METRIC	T2 THREAD UNC	A +.000 [+0.00] -.006 [-0.15]	K ±.008 [±0.2]	L	M +.016 [+0.4] -.000 [-0.0]
10SL	.717 [18.20]	1.000 [25.40]	.126 [3.20]	M4	8-32UNC	.717 [18.20]	.110 [2.80]	Dimension L is dependent on the backshell, the cable range and the fitting used. **Consult factory.**	.559 [14.20]
14S	.906 [23.00]	1.181 [30.00]	.126 [3.20]	M4	8-32UNC	.969 [24.60]	.126 [3.20]		.559 [14.20]
16S	.969 [24.60]	1.280 [32.50]	.126 [3.20]	M4	8-32UNC	1.079 [27.40]	.126 [3.20]		.559 [14.20]
16	.969 [24.60]	1.280 [32.50]	.126 [3.20]	M4	8-32UNC	1.079 [27.40]	.126 [3.20]		.748 [19.00]
18	1.063 [27.00]	1.378 [35.00]	.126 [3.20]	M4	8-32UNC	1.213 [30.80]	.157 [4.00]		.748 [19.00]
20	1.157 [29.40]	1.496 [38.00]	.126 [3.20]	M4	8-32UNC	1.346 [34.20]	.157 [4.00]		.748 [19.00]
22	1.252 [31.80]	1.614 [41.00]	.126 [3.20]	M4	8-32UNC	1.472 [37.40]	.157 [4.00]		.748 [19.00]
24	1.374 [34.90]	1.752 [44.50]	.146 [3.70]	M4	10-24UNC	1.610 [40.90]	.157 [4.00]		.811 [20.60]
28	1.563 [39.70]	2.000 [50.80]	.146 [3.70]	M5	10-24UNC	1.839 [46.70]	.157 [4.00]		.811 [20.60]
32	1.752 [44.50]	2.244 [57.00]	.169 [4.30]	M5	1/4-20UNC	2.102 [53.40]	.157 [4.00]		.874 [22.20]
36	1.937 [49.20]	2.500 [63.50]	.169 [4.30]	M5	1/4-20UNC	2.346 [59.60]	.157 [4.00]		.874 [22.20]
40	2.185 [55.50]	2.752 [69.90]	.169 [4.30]	M5	1/4-20UNC	2.579 [65.50]	.157 [4.00]		.874 [22.20]

Dimensions are in Inches [mm]

CABLE RANGE CODE

(XX) CABLE CODE NO STRAIN RELIEF	TYPE	P CABLE RANGE	A WRENCH FLATS
07R	PG7	0.08-0.20 [2.0-5.0]	0.591 [15.0]
07	PG7	0.12-0.26 [3.0-6.5]	0.591 [15.0]
09R	PG9	0.08-0.24 [2.0-6.0]	0.748 [19.0]
09	PG9	0.16-0.31 [4.0-8.0]	0.748 [19.0]
11R	PG11	0.12-0.28 [3.0-7.0]	0.866 [22.0]
11	PG11	0.20-0.39 [5.0-10.0]	0.866 [22.0]
13R	PG13.5	0.20-0.35 [5.0-9.0]	0.945 [24.0]
13	PG13.5	0.24-0.47 [6.0-12.0]	0.945 [24.0]
16R	PG16	0.28-0.47 [7.0-12.0]	1.063 [27.0]
16	PG16	0.39-0.55 [10.0-14.0]	1.063 [27.0]
21R	PG21	0.35-0.63 [9.0-16.0]	1.299 [33.0]
21	PG21	0.51-0.71 [13.0-18.0]	1.299 [33.0]
29R	PG29	0.47-0.79 [12.0-20.0]	1.654 [42.0]
29	PG29	0.71-0.98 [18.0-25.0]	1.654 [42.0]
36R	PG36	0.79-1.02 [20.0-26.0]	2.087 [53.0]
36	PG36	0.87-1.26 [22.0-32.0]	2.087 [53.0]
42	PG42	1.18-1.50 [30.0-38.0]	2.362 [60.0]
48	PG48	1.34-1.73 [34.0-44.0]	2.559 [65.0]

Dimensions are in Inches [mm]

WALL MOUNT RECEPTACLE, FRONT PANEL MOUNT

00STG*/00ST*

MOUNTING HOLE OPTIONS

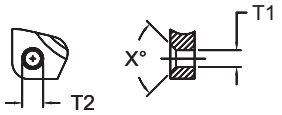

THREADED COUNTERSINK

MOUNTING HOLE CODES

CODE	MOUNTING HOLE TYPE
None	Thru holes
FF	Metric thread
UN	UNC thread
FS	Thru holes W/ Metric C'Sink (X=90°)
FSM	Thru holes W/ UN C'Sink (X=82°)

FRONT VIEW

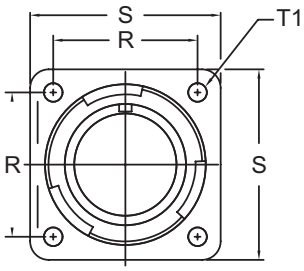

SIDE VIEW

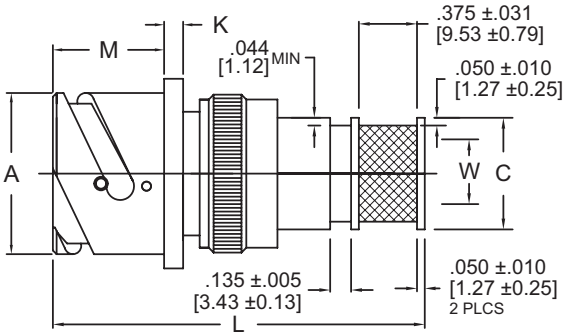

SCPB00STG* **Environmental, no grommet with spin coupling nut backshell**
SCPB00ST* **Environmental with grommet with spin coupling nut backshell**

SHELL SIZE	FRONT VIEW					SIDE VIEW					
	R ±.004 [±0.1]	S ±.012 [±0.3]	T1 +.004 [+0.1] -.000 [-0.0]	T2 THREAD METRIC	T2 THREAD UNC	A +.000 [+0.00] -.006 [-0.15]	C MAX	K ±.008 [±0.2]	L MAX	M +.016 [+0.4] -.000 [-0.0]	W MIN
10SL	.717 [18.20]	1.000 [25.40]	.126 [3.20]	M4	8-32UNC	.717 [18.20]	.500 [12.70]	.110 [2.80]	2.402 [61.00]	.559 [14.20]	.312 [7.92]
14S	.906 [23.00]	1.181 [30.00]	.126 [3.20]	M4	8-32UNC	.969 [24.60]	.630 [16.00]	.126 [3.20]	2.425 [61.60]	.563 [14.30]	.440 [11.18]
16S	.969 [24.60]	1.280 [32.50]	.126 [3.20]	M4	8-32UNC	1.079 [27.40]	.700 [17.78]	.126 [3.20]	2.402 [61.00]	.551 [14.00]	.500 [12.70]
16	.969 [24.60]	1.280 [32.50]	.126 [3.20]	M4	8-32UNC	1.079 [27.40]	.700 [17.78]	.126 [3.20]	2.626 [66.70]	.748 [19.00]	.500 [12.70]
18	1.063 [27.00]	1.378 [35.00]	.126 [3.20]	M4	8-32UNC	1.213 [30.80]	.810 [20.57]	.157 [4.00]	2.626 [66.70]	.752 [19.10]	.625 [15.87]
20	1.157 [29.40]	1.496 [38.00]	.126 [3.20]	M4	8-32UNC	1.346 [34.20]	.810 [20.57]	.157 [4.00]	2.626 [66.70]	.752 [19.10]	.625 [15.87]
22	1.252 [31.80]	1.614 [41.00]	.126 [3.20]	M4	8-32UNC	1.472 [37.40]	.870 [22.10]	.157 [4.00]	2.626 [66.70]	.748 [19.00]	.690 [17.53]
24	1.374 [34.90]	1.752 [44.50]	.146 [3.70]	M4	10-24UNC	1.610 [40.90]	.940 [23.87]	.157 [4.00]	2.701 [68.60]	.811 [20.60]	.750 [19.05]
28	1.563 [39.70]	2.000 [50.80]	.146 [3.70]	M5	10-24UNC	1.839 [46.70]	1.059 [26.90]	.157 [4.00]	2.701 [68.60]	.811 [20.60]	.875 [22.23]
32	1.752 [44.50]	2.244 [57.00]	.169 [4.30]	M5	1/4-20UNC	2.102 [53.40]	Consult Sales	.157 [4.00]	Consult Sales	.874 [22.20]	Consult Sales
36	1.937 [49.20]	2.500 [63.50]	.169 [4.30]	M5	1/4-20UNC	2.346 [59.60]		.157 [4.00]		.874 [22.20]	
40	2.185 [55.50]	2.752 [69.90]	.169 [4.30]	M5	1/4-20UNC	2.579 [65.50]		.157 [4.00]		.874 [22.20]	

Dimensions are in Inches [mm]

00SUG*/00SU*

MOUNTING HOLE OPTIONS

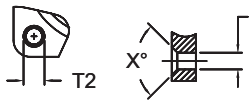

THREADED COUNTERSINK

MOUNTING HOLE CODES

CODE	MOUNTING HOLE TYPE
None	Thru holes
FF	Metric thread
UN	UNC thread
FS	Thru holes W/ Metric C'Sink (X=90°)
FSM	Thru holes W/ UN C'Sink (X=82°)

FRONT VIEW

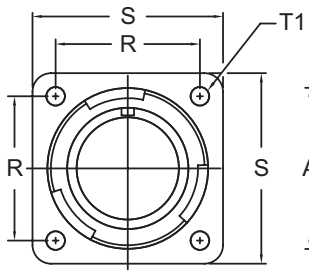

SIDE VIEW

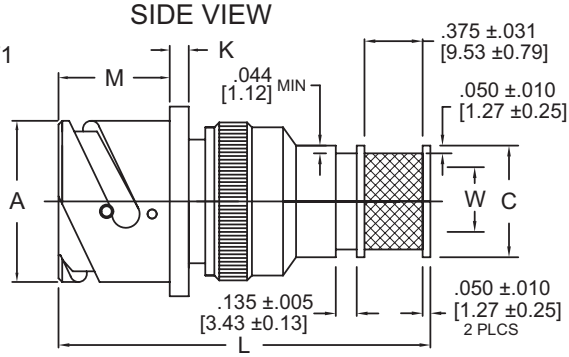

SCPB00SUG* **Environmental, no grommet with solid backshell**
SCPB00SU* **Environmental with grommet with solid backshell**

SHELL SIZE	FRONT VIEW					SIDE VIEW					
	R ±.004 [±0.1]	S ±.012 [±0.3]	T1 +.004 [+0.1] -.000 [-0.0]	T2 THREAD METRIC	T2 THREAD UNC	A +.000 [+0.00] -.006 [-0.15]	C ±.003 [±0.08]	K ±.008 [±0.2]	L MAX	M +.016 [+0.4] -.000 [-0.0]	W ±.005 [±0.13]
10SL	.717 [18.20]	1.000 [25.40]	.126 [3.20]	M4	8-32UNC	.717 [18.20]	.500 [12.70]	.110 [2.80]	2.402 [61.00]	.559 [14.20]	.312 [7.92]
14S	.906 [23.00]	1.181 [30.00]	.126 [3.20]	M4	8-32UNC	.969 [24.60]	.630 [16.00]	.126 [3.20]	2.425 [61.60]	.563 [14.30]	.440 [11.18]
16S	.969 [24.60]	1.280 [32.50]	.126 [3.20]	M4	8-32UNC	1.079 [27.40]	.700 [17.78]	.126 [3.20]	2.402 [61.00]	.551 [14.00]	.500 [12.70]
16	.969 [24.60]	1.280 [32.50]	.126 [3.20]	M4	8-32UNC	1.079 [27.40]	.700 [17.78]	.126 [3.20]	2.626 [66.70]	.748 [19.00]	.500 [12.70]
18	1.063 [27.00]	1.378 [35.00]	.126 [3.20]	M4	8-32UNC	1.213 [30.80]	.810 [20.57]	.157 [4.00]	2.626 [66.70]	.752 [19.10]	.625 [15.87]
20	1.157 [29.40]	1.496 [38.00]	.126 [3.20]	M4	8-32UNC	1.346 [34.20]	.810 [20.57]	.157 [4.00]	2.626 [66.70]	.752 [19.10]	.625 [15.87]
22	1.252 [31.80]	1.614 [41.00]	.126 [3.20]	M4	8-32UNC	1.472 [37.40]	.870 [22.10]	.157 [4.00]	2.626 [66.70]	.748 [19.00]	.690 [17.53]
24	1.374 [34.90]	1.752 [44.50]	.146 [3.70]	M4	10-24UNC	1.610 [40.90]	.940 [23.87]	.157 [4.00]	2.701 [68.60]	.811 [20.60]	.750 [19.05]
28	1.563 [39.70]	2.000 [50.80]	.146 [3.70]	M5	10-24UNC	1.839 [46.70]	1.059 [26.90]	.157 [4.00]	2.701 [68.60]	.811 [20.60]	.875 [22.23]
32	1.752 [44.50]	2.244 [57.00]	.169 [4.30]	M5	1/4-20UNC	2.102 [53.40]	Consult Sales	.157 [4.00]	Consult Sales	.874 [22.20]	Consult Sales
36	1.937 [49.20]	2.500 [63.50]	.169 [4.30]	M5	1/4-20UNC	2.346 [59.60]		.157 [4.00]		.874 [22.20]	
40	2.185 [55.50]	2.752 [69.90]	.169 [4.30]	M5	1/4-20UNC	2.579 [65.50]		.157 [4.00]		.874 [22.20]	

Dimensions are in Inches [mm]

SPACECRAFT COMPONENTS CORP.
3040 Clayton Street
North Las Vegas, NV 89032
Phone: 702.851.7600
Fax: 702.851.7620
Email: salesinfo@spacecraft.com
Web: www.spacecraft.com

WALL MOUNT RECEPTACLE, FRONT PANEL MOUNT

00SV*

MOUNTING HOLE OPTIONS

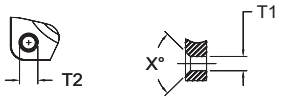

THREADED COUNTERSINK

MOUNTING HOLE CODES

CODE	MOUNTING HOLE TYPE
None	Thru holes
FF	Metric thread
UN	UNC thread
FS	Thru holes W/ Metric C'Sink (X=90°)
FSM	Thru holes W/ UN C'Sink (X=82°)

FRONT VIEW

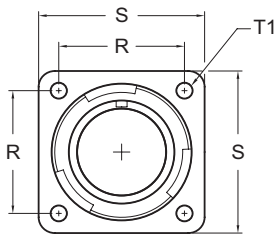

SIDE VIEW

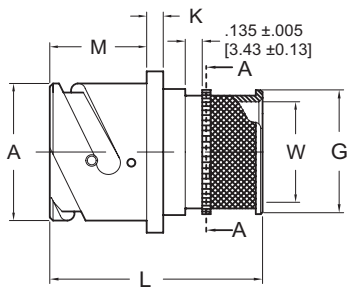

SHELL SIZES: 10SL, 14S & 16S
0.250 ±.005
[6.35 ±0.13]
FOR .125 BAND

SHELL SIZES: 16 -40
0.360 ±.005
[9.14 ±0.13]
FOR .240 BAND

SCPB00SV* Environmental, no grommet

SHELL SIZE	FRONT VIEW					SIDEVIEW							
	R ±.004 [±0.1]	S ±.012 [±0.3]	T1 +.004 [+0.1] -.000 [-0.0]	T2 THREAD		A +.000 [+0.00] -.006 [-0.15]	G MAX	K ±.008 [±0.2]	L MAX	M +.016 [+0.4] -.000 [-0.0]	W MIN	X ±.016 [±0.4]	
				METRIC	UNC							.240 BAND	.120 BAND
10SL	.717 [18.20]	1.000 [25.40]	.126 [3.20]	M4	8-32UNC	.717 [18.20]	.634 [16.10]	.110 [2.80]	1.320 [33.53]	.559 [14.20]	.476 [12.10]	–	.228 [5.80]
14S	.906 [23.00]	1.181 [30.00]	.126 [3.20]	M4	8-32UNC	.969 [24.60]	.756 [19.20]	.126 [3.20]	1.320 [33.53]	.563 [14.30]	.606 [15.40]	–	.228 [5.80]
16S	.969 [24.60]	1.280 [32.50]	.126 [3.20]	M4	8-32UNC	1.079 [27.40]	.882 [22.40]	.126 [3.20]	1.320 [33.53]	.551 [14.00]	.736 [18.70]	–	.228 [5.80]
16	.969 [24.60]	1.280 [32.50]	.126 [3.20]	M4	8-32UNC	1.079 [27.40]	.882 [22.40]	.126 [3.20]	1.685 [42.80]	.748 [19.00]	.736 [18.70]	.146 [3.70]	–
18	1.063 [27.00]	1.378 [35.00]	.126 [3.20]	M4	8-32UNC	1.213 [30.80]	1.004 [25.50]	.157 [4.00]	1.685 [42.80]	.752 [19.10]	.862 [21.90]	.146 [3.70]	–
20	1.157 [29.40]	1.496 [38.00]	.126 [3.20]	M4	8-32UNC	1.346 [34.20]	1.130 [28.70]	.157 [4.00]	1.685 [42.80]	.752 [19.10]	.976 [24.80]	.146 [3.70]	–
22	1.252 [31.80]	1.614 [41.00]	.126 [3.20]	M4	8-32UNC	1.472 [37.40]	1.256 [31.90]	.157 [4.00]	1.685 [42.80]	.748 [19.00]	1.106 [28.10]	.146 [3.70]	–
24	1.374 [34.90]	1.752 [44.50]	.146 [3.70]	M4	10-24UNC	1.610 [40.90]	1.382 [35.10]	.157 [4.00]	1.685 [42.80]	.811 [20.60]	1.228 [31.20]	.146 [3.70]	–
28	1.563 [39.70]	2.000 [50.80]	.146 [3.70]	M5	10-24UNC	1.839 [46.70]	1.630 [41.40]	.157 [4.00]	1.725 [43.82]	.811 [20.60]	1.413 [35.90]	.185 [4.70]	–
32	1.752 [44.50]	2.244 [57.00]	.169 [4.30]	M5	1/4-20UNC	2.102 [53.40]	1.882 [47.80]	.157 [4.00]	1.725 [43.82]	.874 [22.20]	1.697 [43.10]	.185 [4.70]	–
36	1.937 [49.20]	2.500 [63.50]	.169 [4.30]	M5	1/4-20UNC	2.346 [59.60]	2.067 [52.50]	.157 [4.00]	1.725 [43.82]	.874 [22.20]	1.890 [48.00]	.185 [4.70]	–
40	2.185 [55.50]	2.752 [69.90]	.169 [4.30]	M5	1/4-20UNC	2.579 [65.50]	2.319 [58.90]	.157 [4.00]	1.725 [43.82]	.874 [22.20]	2.118 [53.80]	.185 [4.70]	–

Dimensions are in Inches [mm]

00TRAC*

MOUNTING HOLE OPTIONS

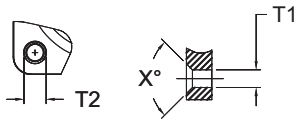

THREADED COUNTERSINK

MOUNTING HOLE CODES

CODE	MOUNTING HOLE TYPE
None	Thru holes
FF	Metric thread
UN	UNC thread
FS	Thru holes W/ Metric C'Sink (X=90°)
FSM	Thru holes W/ UN C'Sink (X=82°)

FRONT VIEW

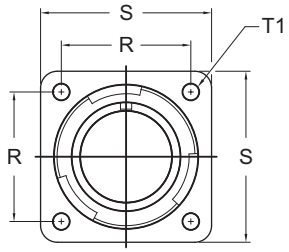

SIDE VIEW

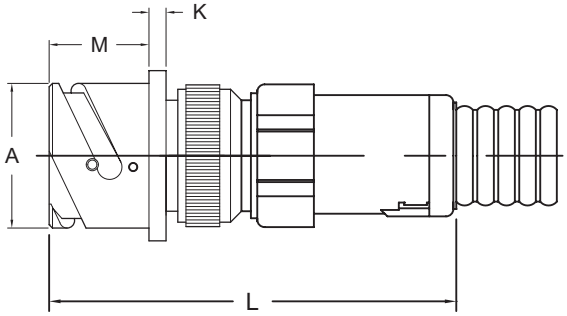

SCPB00TRAC* Environmental with grommet

SHELL SIZE	FRONT VIEW					SIDE VIEW			
	R ±.004 [±0.1]	S ±.012 [±0.3]	T1 +.004 [+0.1] -.000 [-0.0]	T2 THREAD		A +.000 [+0.00] -.006 [-0.15]	K ±.008 [±0.2]	L	M +.016 [+0.4] -.000 [-0.0]
				METRIC	UNC				
10SL	.717 [18.20]	1.000 [25.40]	.126 [3.20]	M4	8-32UNC	.717 [18.20]	.110 [2.80]	Dimension L is dependent on the back-shell used, the cable range and the fitting used. **Consult factory.**	.559 [14.20]
14S	.906 [23.00]	1.181 [30.00]	.126 [3.20]	M4	8-32UNC	.969 [24.60]	.126 [3.20]		.563 [14.30]
16S	.969 [24.60]	1.280 [32.50]	.126 [3.20]	M4	8-32UNC	1.079 [27.40]	.126 [3.20]		.551 [14.00]
16	.969 [24.60]	1.280 [32.50]	.126 [3.20]	M4	8-32UNC	1.079 [27.40]	.126 [3.20]		.748 [19.00]
18	1.063 [27.00]	1.378 [35.00]	.126 [3.20]	M4	8-32UNC	1.213 [30.80]	.157 [4.00]		.752 [19.10]
20	1.157 [29.40]	1.496 [38.00]	.126 [3.20]	M4	8-32UNC	1.346 [34.20]	.157 [4.00]		.752 [19.10]
22	1.252 [31.80]	1.614 [41.00]	.126 [3.20]	M4	8-32UNC	1.472 [37.40]	.157 [4.00]		.748 [19.00]
24	1.374 [34.90]	1.752 [44.50]	.146 [3.70]	M4	10-24UNC	1.610 [40.90]	.157 [4.00]		.811 [20.60]
28	1.563 [39.70]	2.000 [50.80]	.146 [3.70]	M5	10-24UNC	1.839 [46.70]	.157 [4.00]		.811 [20.60]
32	1.752 [44.50]	2.244 [57.00]	.169 [4.30]	M5	1/4-20UNC	2.102 [53.40]	.157 [4.00]		.874 [22.20]
36	1.937 [49.20]	2.500 [63.50]	.169 [4.30]	M5	1/4-20UNC	2.346 [59.60]	.157 [4.00]		.874 [22.20]
40	2.185 [55.50]	2.752 [69.90]	.169 [4.30]	M5	1/4-20UNC	2.579 [65.50]	.157 [4.00]		.874 [22.20]

Dimensions are in Inches [mm]

WALL MOUNT RECEPTACLE, FRONT PANEL MOUNT

00WK*/00WKG*

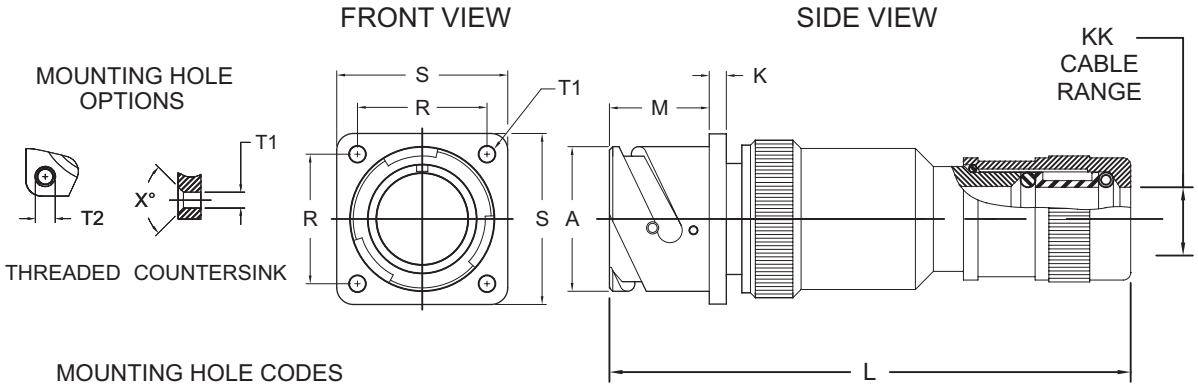

MOUNTING HOLE CODES

CODE	MOUNTING HOLE TYPE
None	Thru holes
FF	Metric thread
UN	UNC thread
FS	Thru holes W/ Metric C'Sink (X=90°)
FSM	Thru holes W/ UN C'Sink (X=82°)

SCPB00WK* **Environmental with grommet**
SCPB00WKG* **Environmental, no grommet**

SHELL SIZE	FRONT VIEW					SIDE VIEW			
	R ±.004 [±0.1]	S ±.012 [±0.3]	T1 +.004 [+0.1] -.000 [-0.0]	T2 THREAD METRIC	T2 THREAD UNC	A +.000 [+0.00] -.006 [-0.15]	K ±.008 [±0.2]	L MAX	M +.016 [+0.4] -.000 [-0.0]
10SL	.717 [18.20]	1.000 [25.40]	.126 [3.20]	M4	8-32UNC	.717 [18.20]	.110 [2.80]	4.370 [111.0]	.559 [14.20]
14S	.906 [23.00]	1.181 [30.00]	.126 [3.20]	M4	8-32UNC	.969 [24.60]	.126 [3.20]	4.409 [112.0]	.563 [14.30]
16S	.969 [24.60]	1.280 [32.50]	.126 [3.20]	M4	8-32UNC	1.079 [27.40]	.126 [3.20]	3.937 [100.0]	.551 [14.00]
16	.969 [24.60]	1.280 [32.50]	.126 [3.20]	M4	8-32UNC	1.079 [27.40]	.126 [3.20]	4.331 [110.0]	.748 [19.00]
18	1.063 [27.00]	1.378 [35.00]	.126 [3.20]	M4	8-32UNC	1.213 [30.80]	.157 [4.00]	5.000 [127.0]	.752 [19.10]
20	1.157 [29.40]	1.496 [38.00]	.126 [3.20]	M4	8-32UNC	1.346 [34.20]	.157 [4.00]	5.000 [127.0]	.752 [19.10]
22	1.252 [31.80]	1.614 [41.00]	.126 [3.20]	M4	8-32UNC	1.472 [37.40]	.157 [4.00]	5.236 [133.0]	.748 [19.00]
24	1.374 [34.90]	1.752 [44.50]	.146 [3.70]	M4	10-24UNC	1.610 [40.90]	.157 [4.00]	5.276 [134.0]	.811 [20.60]
28	1.563 [39.70]	2.000 [50.80]	.146 [3.70]	M5	10-24UNC	1.839 [46.70]	.157 [4.00]	5.276 [134.0]	.811 [20.60]
32	1.752 [44.50]	2.244 [57.00]	.169 [4.30]	M5	1/4-20UNC	2.102 [53.40]	.157 [4.00]	5.354 [136.0]	.874 [22.20]
36	1.937 [49.20]	2.500 [63.50]	.169 [4.30]	M5	1/4-20UNC	2.346 [59.60]	.157 [4.00]	5.354 [136.0]	.874 [22.20]
40	2.185 [55.50]	2.752 [69.90]	.169 [4.30]	M5	1/4-20UNC	2.579 [65.50]	.157 [4.00]	5.354 [136.0]	.874 [22.20]

Dimensions are in Inches [mm]
1. Dimension "L" will vary from the values indicated with escalating or de-escalating backshells and some special insert configurations.

(**) CABLE RANGE CODE	KK MIN	KK MAX
01	.063 [1.59]	.125 [3.18]
02	.125 [3.18]	.250 [6.35]
03	.250 [6.35]	.375 [9.53]
04	.375 [9.53]	.500 [12.70]
05	.500 [12.70]	.625 [15.88]
06	.625 [15.88]	.750 [19.05]
07	.750 [19.05]	.875 [22.23]
08	.875 [22.23]	1.000 [25.40]
09	1.000 [25.40]	1.125 [28.58]
10	1.125 [28.58]	1.250 [31.75]
11	1.250 [31.75]	1.375 [34.93]
12	1.375 [34.93]	1.500 [38.10]
13	1.500 [38.10]	1.623 [41.23]
14	1.623 [41.23]	1.750 [44.45]
15	1.750 [44.45]	1.875 [47.63]
16	1.875 [47.63]	2.000 [50.80]

(**) Cable Range must be specified as part of the connector part number using Cable Range Code.

SPACECRAFT COMPONENTS CORP.
3040 Clayton Street
North Las Vegas, NV 89032
Phone: 702.851.7600
Fax: 702.851.7620
Email: salesinfo@spacecraft.com
Web: www.spacecraft.com

01–*

FRONT VIEW

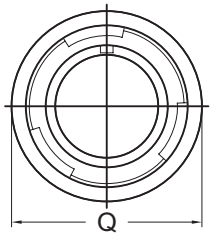

SIDE VIEW

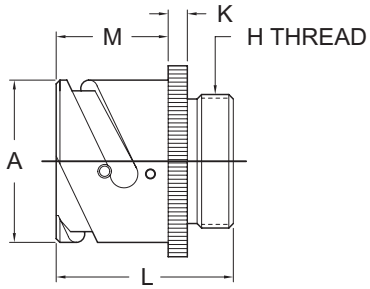

SCPB01-* Non-environmental

SHELL SIZE	FRONT VIEW	SIDE VIEW				
	Q MAX	A +.000 [+0.00] -.006 [-0.15]	H THREAD CLASS 2A	K ±.008 [±0.2]	L ±.012 [±0.3]	M +.016 [+0.4] -.000 [-0.0]
10SL	.886 [22.50]	.717 [18.20]	5/8-24 UNEF	.110 [2.80]	1.087 [27.60]	.559 [14.20]
14S	1.161 [29.50]	.969 [24.60]	3/4-20 UNEF	.126 [3.20]	1.087 [27.60]	.559 [14.20]
16S	1.240 [31.50]	1.079 [27.40]	7/8-20 UNEF	.126 [3.20]	1.087 [27.60]	.559 [14.20]
16	1.240 [31.50]	1.079 [27.40]	7/8-20 UNEF	.126 [3.20]	1.331 [33.80]	.748 [19.00]
18	1.358 [34.50]	1.213 [30.80]	1-20 UNEF	.157 [4.00]	1.331 [33.80]	.748 [19.00]
20	1.476 [37.50]	1.346 [34.20]	1 1/8-18 UNEF	.157 [4.00]	1.331 [33.80]	.748 [19.00]
22	1.594 [40.50]	1.472 [37.40]	1 1/4-18 UNEF	.157 [4.00]	1.331 [33.80]	.748 [19.00]
24	1.752 [44.50]	1.610 [40.90]	1 3/8-18 UNEF	.157 [4.00]	1.409 [35.80]	.811 [20.60]
28	1.969 [50.00]	1.839 [46.70]	1 5/8-18 UNEF	.157 [4.00]	1.409 [35.80]	.811 [20.60]
32	2.224 [56.50]	2.102 [53.40]	1 7/8-16 UN	.157 [4.00]	1.469 [37.30]	.874 [22.20]
36	2.480 [63.00]	2.346 [59.60]	2 1/16-16 UN	.157 [4.00]	1.469 [37.30]	.874 [22.20]
40	2.717 [69.00]	2.579 [65.50]	2 5/16-16 UNS	.157 [4.00]	1.469 [37.30]	.874 [22.20]

Dimensions are in Inches [mm]

01A*/01R*

FRONT VIEW

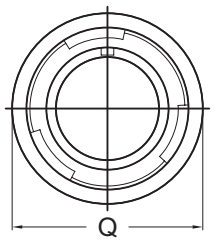

SIDE VIEW

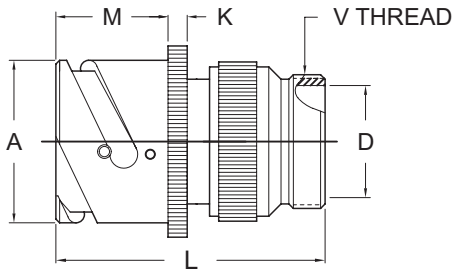

SCPB01A* Non-environmental, no grommet
SCPB01R* Environmental with grommet

SHELL SIZE	FRONT VIEW	SIDE VIEW					
	Q MAX	A +.000 [+0.00] -.006 [-0.15]	D MIN.	K ±.008 [±0.2]	L MAX.	M +.016 [+0.4] -.000 [-0.0]	V THREAD CLASS 2A
10SL	.886 [22.50]	.717 [18.20]	.323 [8.20]	.110 [2.80]	1.693 [43.00]	.559 [14.20]	5/8-24 UNEF
14S	1.161 [29.50]	.969 [24.60]	.437 [11.10]	.126 [3.20]	1.850 [47.00]	.559 [14.20]	3/4-20 UNEF
16S	1.240 [31.50]	1.079 [27.40]	.563 [14.30]	.126 [3.20]	1.850 [47.00]	.559 [14.20]	7/8-20 UNEF
16	1.240 [31.50]	1.079 [27.40]	.563 [14.30]	.126 [3.20]	2.283 [58.00]	.748 [19.00]	7/8-20 UNEF
18	1.358 [34.50]	1.213 [30.80]	.657 [16.70]	.157 [4.00]	2.283 [58.00]	.748 [19.00]	1-20 UNEF
20	1.476 [37.50]	1.346 [34.20]	.780 [19.80]	.157 [4.00]	2.283 [58.00]	.748 [19.00]	1 3/16-18 UNEF
22	1.594 [40.50]	1.472 [37.40]	.780 [19.80]	.157 [4.00]	2.323 [59.00]	.748 [19.00]	1 3/16-18 UNEF
24	1.752 [44.50]	1.610 [40.90]	1.000 [25.40]	.157 [4.00]	2.402 [61.00]	.811 [20.60]	1 7/16-18 UNEF
28	1.969 [50.00]	1.839 [46.70]	1.063 [27.00]	.157 [4.00]	2.638 [67.00]	.811 [20.60]	1 7/16-18 UNEF
32	2.224 [56.50]	2.102 [53.40]	1.280 [32.50]	.157 [4.00]	2.795 [71.00]	.874 [22.20]	1 3/4-18 UNS
36	2.480 [63.00]	2.346 [59.60]	1.406 [35.70]	.157 [4.00]	2.835 [72.00]	.874 [22.20]	2-18 UNS
40	2.717 [69.00]	2.579 [65.50]	1.772 [45.00]	.157 [4.00]	3.386 [86.00]	.874 [22.20]	2 1/4-16 UN

Dimensions are in Inches [mm]

IN-LINE RECEPTACLE

01AE*/01E*

FRONT VIEW

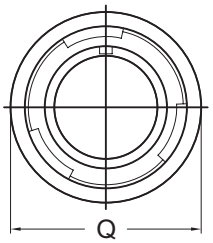

SIDE VIEW

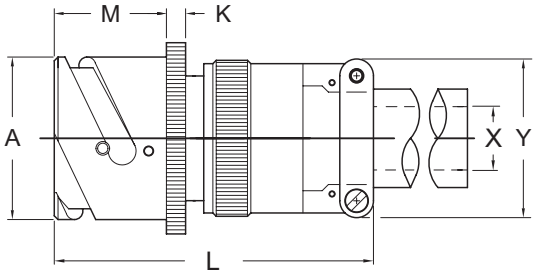

SCPB01AE* **Non-environmental, no grommet**
SCPB01E* **Environmental with grommet**

SHELL SIZE	FRONT VIEW	SIDE VIEW					
	Q MAX	A +.000 [+0.00] -.006 [-0.15]	K ±.008 [±0.2]	L MAX	M +.016 [+0.4] -.000 [-0.0]	X MIN	Y MAX
10SL	.886 [22.50]	.717 [18.20]	.110 [2.80]	2.520 [64.0]	.559 [14.20]	.256 [6.50]	.894 [22.70]
14S	1.161 [29.50]	.969 [24.60]	.126 [3.20]	2.717 [69.0]	.559 [14.20]	.354 [9.00]	1.083 [27.50]
16S	1.240 [31.50]	1.079 [27.40]	.126 [3.20]	2.795 [71.0]	.559 [14.20]	.433 [11.00]	1.181 [30.00]
16	1.240 [31.50]	1.079 [27.40]	.126 [3.20]	3.228 [82.0]	.748 [19.00]	.433 [11.00]	1.181 [30.00]
18	1.358 [34.50]	1.213 [30.80]	.157 [4.00]	3.228 [82.0]	.748 [19.00]	.559 [14.20]	1.268 [32.20]
20	1.476 [37.50]	1.346 [34.20]	.157 [4.00]	3.228 [82.0]	.748 [19.00]	.622 [15.80]	1.476 [37.50]
22	1.594 [40.50]	1.472 [37.40]	.157 [4.00]	3.268 [83.0]	.748 [19.00]	.622 [15.80]	1.476 [37.50]
24	1.752 [44.50]	1.610 [40.90]	.157 [4.00]	3.425 [87.0]	.811 [20.60]	.843 [21.40]	1.705 [43.30]
28	1.969 [50.00]	1.839 [46.70]	.157 [4.00]	3.661 [93.0]	.811 [20.60]	.843 [21.40]	1.705 [43.30]
32	2.224 [56.50]	2.102 [53.40]	.157 [4.00]	3.898 [99.0]	.874 [22.20]	1.051 [26.70]	2.035 [51.70]
36	2.480 [63.00]	2.346 [59.60]	.157 [4.00]	3.937 [100.0]	.874 [22.20]	1.248 [31.70]	2.283 [58.00]
40	2.717 [69.00]	2.579 [65.50]	.157 [4.00]	5.039 [128.0]	.874 [22.20]	1.374 [34.90]	2.579 [65.50]

Dimensions are in Inches [mm]

01AF*/01F*

FRONT VIEW

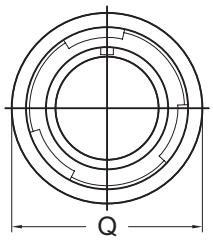

SIDE VIEW

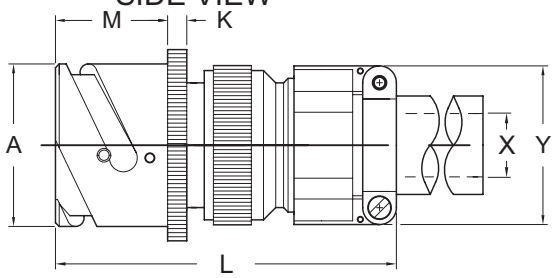

SCPB01AF* **Non-environmental, no grommet**
SCPB01F* **Environmental with grommet**

SHELL SIZE	FRONT VIEW	SIDE VIEW					
	Q MAX	A +.000 [+0.00] -.006 [-0.15]	K ±.008 [±0.2]	L MAX	M +.016 [+0.4] -.000 [-0.0]	X MIN	Y MAX
10SL	.886 [22.50]	.717 [18.20]	.110 [2.80]	2.520 [64.0]	.559 [14.20]	.256 [6.50]	.894 [22.70]
14S	1.161 [29.50]	.969 [24.60]	.126 [3.20]	2.717 [69.0]	.559 [14.20]	.354 [9.00]	1.083 [27.50]
16S	1.240 [31.50]	1.079 [27.40]	.126 [3.20]	2.795 [71.0]	.559 [14.20]	.433 [11.00]	1.181 [30.00]
16	1.240 [31.50]	1.079 [27.40]	.126 [3.20]	3.228 [82.0]	.748 [19.00]	.433 [11.00]	1.181 [30.00]
18	1.358 [34.50]	1.213 [30.80]	.157 [4.00]	3.228 [82.0]	.748 [19.00]	.559 [14.20]	1.268 [32.20]
20	1.476 [37.50]	1.346 [34.20]	.157 [4.00]	3.228 [82.0]	.748 [19.00]	.622 [15.80]	1.476 [37.50]
22	1.594 [40.50]	1.472 [37.40]	.157 [4.00]	3.268 [83.0]	.748 [19.00]	.622 [15.80]	1.476 [37.50]
24	1.752 [44.50]	1.610 [40.90]	.157 [4.00]	3.425 [87.0]	.811 [20.60]	.843 [21.40]	1.705 [43.30]
28	1.969 [50.00]	1.839 [46.70]	.157 [4.00]	3.661 [93.0]	.811 [20.60]	.843 [21.40]	1.705 [43.30]
32	2.224 [56.50]	2.102 [53.40]	.157 [4.00]	3.898 [99.0]	.874 [22.20]	1.051 [26.70]	2.035 [51.70]
36	2.480 [63.00]	2.346 [59.60]	.157 [4.00]	3.937 [100.0]	.874 [22.20]	1.248 [31.70]	2.283 [58.00]
40	2.717 [69.00]	2.579 [65.50]	.157 [4.00]	5.039 [128.0]	.874 [22.20]	1.374 [34.90]	2.579 [65.50]

Dimensions are in Inches [mm]

SPACECRAFT COMPONENTS CORP.
3040 Clayton Street
North Las Vegas, NV 89032
Phone: 702.851.7600
Fax: 702.851.7620
Email: salesinfo@spacecraft.com
Web: www.spacecraft.com

01AG*/01G*

FRONT VIEW

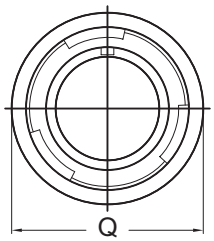

SIDE VIEW

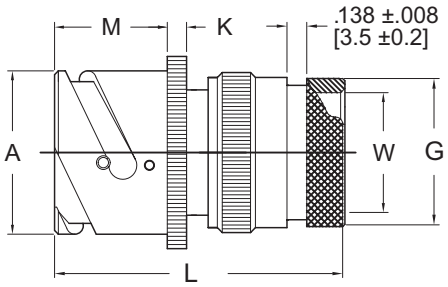

SCPB01AG* **Environmental, no grommet**
SCPB01G* **Environmental with grommet**

SHELL SIZE	FRONT VIEW	SIDE VIEW					
	Q MAX	A +.000 [+0.00] -.006 [-0.15]	G ±.008 [±0.2]	K ±.008 [±0.2]	L MAX	M +.016 [+0.4] -.000 [-0.0]	W MIN
10SL	.886 [22.50]	.717 [18.20]	.610 [15.50]	.110 [2.80]	1.890 [48.00]	.559 [14.20]	.335 [8.50]
14S	1.161 [29.50]	.969 [24.60]	.752 [19.10]	.126 [3.20]	1.890 [48.00]	.559 [14.20]	.472 [12.00]
16S	1.240 [31.50]	1.079 [27.40]	.941 [23.90]	.126 [3.20]	1.890 [48.00]	.559 [14.20]	.571 [14.50]
16	1.240 [31.50]	1.079 [27.40]	.941 [23.90]	.126 [3.20]	2.362 [60.00]	.748 [19.00]	.571 [14.50]
18	1.358 [34.50]	1.213 [30.80]	.941 [23.90]	.157 [4.00]	2.362 [60.00]	.748 [19.00]	.689 [17.50]
20	1.476 [37.50]	1.346 [34.20]	1.165 [29.60]	.157 [4.00]	2.559 [65.00]	.748 [19.00]	.768 [19.50]
22	1.594 [40.50]	1.472 [37.40]	1.165 [29.60]	.157 [4.00]	2.559 [65.00]	.748 [19.00]	.866 [22.00]
24	1.752 [44.50]	1.610 [40.90]	1.488 [37.80]	.157 [4.00]	2.559 [65.00]	.811 [20.60]	.984 [25.00]
28	1.969 [50.00]	1.839 [46.70]	1.488 [37.80]	.157 [4.00]	2.559 [65.00]	.811 [20.60]	1.142 [29.00]
32	2.224 [56.50]	2.102 [53.40]	1.882 [47.80]	.157 [4.00]	2.756 [70.00]	.874 [22.20]	1.339 [34.00]
36	2.480 [63.00]	2.346 [59.60]	1.882 [47.80]	.157 [4.00]	2.953 [75.00]	.874 [22.20]	1.516 [38.50]
40	2.717 [69.00]	2.579 [65.50]	2.063 [52.40]	.157 [4.00]	3.031 [77.00]	.874 [22.20]	1.890 [48.00]

Dimensions are in Inches [mm]

01AG2G*/01G2G*

FRONT VIEW

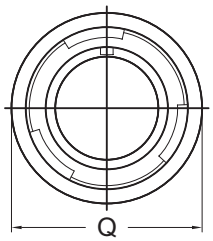

SIDE VIEW

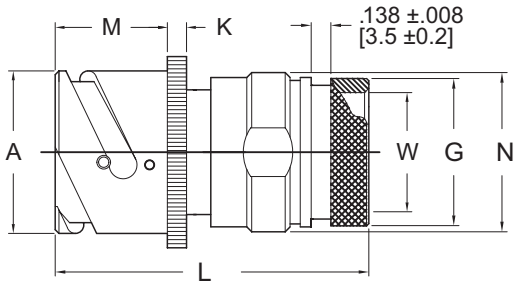

SCPB01AG2G* **Environmental, no grommet**
SCPB01G2G* **Environmental with grommet**

SHELL SIZE	FRONT VIEW	SIDE VIEW						
	Q	A	G	K	L	M	N	W
	MAX	+.000 [+0.00] -.006 [-0.15]	±.008 [±0.2]	±.008 [±0.2]	APRX	+.016 [+0.4] -.000 [-0.0]	MAX	MIN
10SL	.886 [22.50]	.717 [18.20]	.610 [15.50]	.110 [2.80]	1.961 [49.80]	.559 [14.20]	.866 [22.00]	.335 [8.50]
14S	1.161 [29.50]	.969 [24.60]	.752 [19.10]	.126 [3.20]	1.961 [49.80]	.559 [14.20]	.984 [25.00]	.472 [12.00]
16S	1.240 [31.50]	1.079 [27.40]	.941 [23.90]	.126 [3.20]	1.992 [50.60]	.559 [14.20]	1.102 [28.00]	.571 [14.50]
16	1.240 [31.50]	1.079 [27.40]	.941 [23.90]	.126 [3.20]	2.366 [60.10]	.748 [19.00]	1.102 [28.00]	.571 [14.50]
18	1.358 [34.50]	1.213 [30.80]	.941 [23.90]	.157 [4.00]	2.346 [59.60]	.748 [19.00]	1.220 [31.00]	.689 [17.50]
20	1.476 [37.50]	1.346 [34.20]	1.165 [29.60]	.157 [4.00]	2.374 [60.30]	.748 [19.00]	1.378 [35.00]	.768 [19.50]
22	1.594 [40.50]	1.472 [37.40]	1.165 [29.60]	.157 [4.00]	2.374 [60.30]	.748 [19.00]	1.496 [38.00]	.866 [22.00]
24	1.752 [44.50]	1.610 [40.90]	1.488 [37.80]	.157 [4.00]	2.476 [62.90]	.811 [20.60]	1.614 [41.00]	.984 [25.00]
28	1.969 [50.00]	1.839 [46.70]	1.488 [37.80]	.157 [4.00]	2.547 [64.70]	.811 [20.60]	1.890 [48.00]	1.142 [29.00]
32	2.224 [56.50]	2.102 [53.40]	1.882 [47.80]	.157 [4.00]	2.638 [67.00]	.874 [22.20]	2.126 [54.00]	1.339 [34.00]
36	2.480 [63.00]	2.346 [59.60]	1.882 [47.80]	.157 [4.00]	2.638 [67.00]	.874 [22.20]	2.402 [61.00]	1.516 [38.50]
40	2.717 [69.00]	2.579 [65.50]	2.063 [52.40]	.157 [4.00]	2.650 [67.30]	.874 [22.20]	2.677 [68.00]	1.890 [48.00]

Dimensions are in Inches [mm]

IN-LINE RECEPTACLE

01APT*

FRONT VIEW

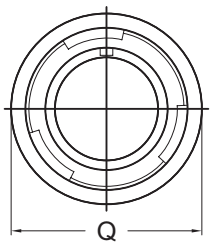

SIDE VIEW

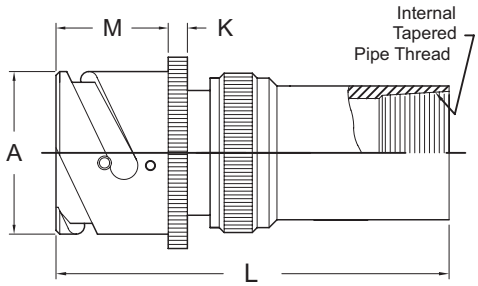

SCPB01APT* Environmental, no grommet

SHELL SIZE	FRONT VIEW	SIDE VIEW					
	Q MAX	A +.000 [+0.00] -.006 [-0.15]	K ±.008 [±0.2]	L MAX	M +.016 [+0.4] -.000 [-0.0]	CODE	PIPE THREAD
10SL	.886 [22.50]	.717 [18.20]	.110 [2.80]	2.362 [60.00]	.559 [14.20]	01	1/8
14S	1.161 [29.50]	.969 [24.60]	.126 [3.20]	2.362 [60.00]	.559 [14.20]	02	1/4
16S	1.240 [31.50]	1.079 [27.40]	.126 [3.20]	2.362 [60.00]	.559 [14.20]	03	3/8
16	1.240 [31.50]	1.079 [27.40]	.126 [3.20]	2.756 [70.00]	.748 [19.00]	04	1/2
18	1.358 [34.50]	1.213 [30.80]	.157 [4.00]	2.756 [70.00]	.748 [19.00]	05	3/4
20	1.476 [37.50]	1.346 [34.20]	.157 [4.00]	2.756 [70.00]	.748 [19.00]	06	1
22	1.594 [40.50]	1.472 [37.40]	.157 [4.00]	2.756 [70.00]	.748 [19.00]	07	1 1/4
24	1.752 [44.50]	1.610 [40.90]	.157 [4.00]	3.150 [80.00]	.811 [20.60]	08	1 1/2
28	1.969 [50.00]	1.839 [46.70]	.157 [4.00]	3.150 [80.00]	.811 [20.60]	09	2
32	2.224 [56.50]	2.102 [53.40]	.157 [4.00]	3.150 [80.00]	.874 [22.20]	10	2 1/2
36	2.480 [63.00]	2.346 [59.60]	.157 [4.00]	3.740 [95.00]	.874 [22.20]	–	–
40	2.717 [69.00]	2.579 [65.50]	.157 [4.00]	3.740 [95.00]	.874 [22.20]	–	–

Dimensions are in Inches [mm]

01ARV*/01RV*

FRONT VIEW

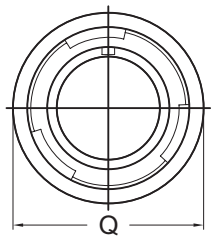

SIDE VIEW

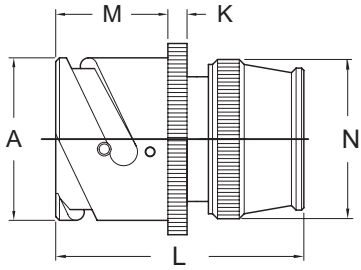

SCPB01ARV* Non-environmental, no grommet
SCPB01RV* Environmental with grommet

SHELL SIZE	FRONT VIEW	SIDE VIEW				
	Q MAX	A +.000 [+0.00] -.006 [-0.15]	K ±.008 [±0.2]	L MAX	M +.016 [+0.4] -.000 [-0.0]	N MAX
10SL	.886 [22.50]	.717 [18.20]	.110 [2.80]	1.575 [40.00]	.559 [14.20]	.787 [20.00]
14S	1.161 [29.50]	.969 [24.60]	.126 [3.20]	1.575 [40.00]	.559 [14.20]	.945 [24.00]
16S	1.240 [31.50]	1.079 [27.40]	.126 [3.20]	1.575 [40.00]	.559 [14.20]	1.024 [26.00]
16	1.240 [31.50]	1.079 [27.40]	.126 [3.20]	2.205 [56.00]	.748 [19.00]	1.024 [26.00]
18	1.358 [34.50]	1.213 [30.80]	.157 [4.00]	2.205 [56.00]	.748 [19.00]	1.161 [29.50]
20	1.476 [37.50]	1.346 [34.20]	.157 [4.00]	2.244 [57.00]	.748 [19.00]	1.299 [33.00]
22	1.594 [40.50]	1.472 [37.40]	.157 [4.00]	2.244 [57.00]	.748 [19.00]	1.417 [36.00]
24	1.752 [44.50]	1.610 [40.90]	.157 [4.00]	2.323 [59.00]	.811 [20.60]	1.575 [40.00]
28	1.969 [50.00]	1.839 [46.70]	.157 [4.00]	2.323 [59.00]	.811 [20.60]	1.811 [46.00]
32	2.224 [56.50]	2.102 [53.40]	.157 [4.00]	2.362 [60.00]	.874 [22.20]	2.028 [51.50]
36	2.480 [63.00]	2.346 [59.60]	.157 [4.00]	2.362 [60.00]	.874 [22.20]	2.283 [58.00]
40	2.717 [69.00]	2.579 [65.50]	.157 [4.00]	2.402 [61.00]	.874 [22.20]	2.539 [64.50]

Dimensions are in Inches [mm]

SPACECRAFT COMPONENTS CORP.
3040 Clayton Street
North Las Vegas, NV 89032
Phone: 702.851.7600
Fax: 702.851.7620
Email: salesinfo@spacecraft.com
Web: www.spacecraft.com

01ASB*/01SB*

FRONT VIEW

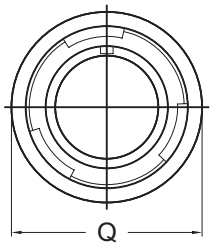

SIDE VIEW

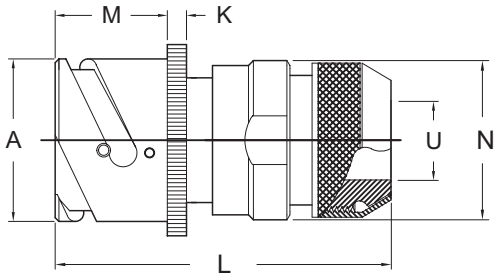

SCPB01ASB* **Environmental, no grommet**
SCPB01SB* **Environmental with grommet**

SHELL SIZE	FRONT VIEW	SIDE VIEW					
	Q MAX	A +.000 [+0.00] -.006 [-0.15]	K ±.008 [±0.2]	L MAX	M +.016 [+0.4] -.000 [-0.0]	N MAX	U MIN
10SL	.886 [22.50]	.717 [18.20]	.110 [2.80]	2.055 [52.20]	.559 [14.20]	.866 [22.00]	.339 [8.60]
14S	1.161 [29.50]	.969 [24.60]	.126 [3.20]	2.055 [52.20]	.559 [14.20]	.984 [25.00]	.417 [10.60]
16S	1.240 [31.50]	1.079 [27.40]	.126 [3.20]	2.134 [54.20]	.559 [14.20]	1.102 [28.00]	.531 [13.50]
16	1.240 [31.50]	1.079 [27.40]	.126 [3.20]	2.492 [63.30]	.748 [19.00]	1.102 [28.00]	.531 [13.50]
18	1.358 [34.50]	1.213 [30.80]	.157 [4.00]	2.539 [64.50]	.748 [19.00]	1.220 [31.00]	.575 [14.60]
20	1.476 [37.50]	1.346 [34.20]	.157 [4.00]	2.539 [64.50]	.748 [19.00]	1.378 [35.00]	.728 [18.50]
22	1.594 [40.50]	1.472 [37.40]	.157 [4.00]	2.539 [64.50]	.748 [19.00]	1.496 [38.00]	.819 [20.80]
24	1.752 [44.50]	1.610 [40.90]	.157 [4.00]	2.567 [65.20]	.811 [20.60]	1.614 [41.00]	.969 [24.60]
28	1.969 [50.00]	1.839 [46.70]	.157 [4.00]	2.567 [65.20]	.811 [20.60]	1.890 [48.00]	1.063 [27.00]
32	2.224 [56.50]	2.102 [53.40]	.157 [4.00]	2.630 [66.80]	.874 [22.20]	2.126 [54.00]	1.311 [33.30]
36	2.480 [63.00]	2.346 [59.60]	.157 [4.00]	2.630 [66.80]	.874 [22.20]	2.402 [61.00]	1.516 [38.50]
40	2.717 [69.00]	2.579 [65.50]	.157 [4.00]	2.630 [66.80]	.874 [22.20]	2.677 [68.00]	1.811 [46.00]

Dimensions are in Inches [mm]

01ASBF*/01SBF*

FRONT VIEW

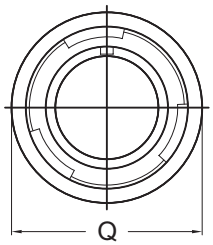

SIDE VIEW

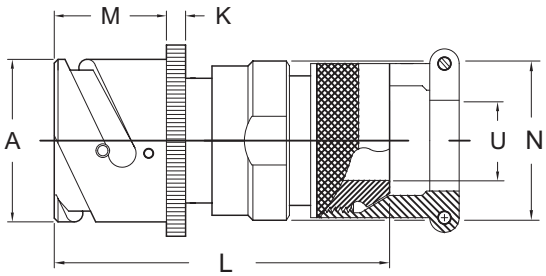

SCPB01ASBF* **Environmental, no grommet**
SCPB01SBF* **Environmental with grommet**

SHELL SIZE	FRONT VIEW	SIDE VIEW					
	Q MAX	A +.000 [+0.00] -.006 [-0.15]	K ±.008 [±0.2]	L MAX	M +.016 [+0.4] -.000 [-0.0]	N MAX	U MIN
10SL	.886 [22.50]	.717 [18.20]	.110 [2.80]	2.055 [52.20]	.559 [14.20]	.866 [22.00]	.339 [8.60]
14S	1.161 [29.50]	.969 [24.60]	.126 [3.20]	2.055 [52.20]	.559 [14.20]	.984 [25.00]	.417 [10.60]
16S	1.240 [31.50]	1.079 [27.40]	.126 [3.20]	2.134 [54.20]	.559 [14.20]	1.102 [28.00]	.531 [13.50]
16	1.240 [31.50]	1.079 [27.40]	.126 [3.20]	2.492 [63.30]	.748 [19.00]	1.102 [28.00]	.531 [13.50]
18	1.358 [34.50]	1.213 [30.80]	.157 [4.00]	2.539 [64.50]	.748 [19.00]	1.220 [31.00]	.575 [14.60]
20	1.476 [37.50]	1.346 [34.20]	.157 [4.00]	2.539 [64.50]	.748 [19.00]	1.378 [35.00]	.728 [18.50]
22	1.594 [40.50]	1.472 [37.40]	.157 [4.00]	2.539 [64.50]	.748 [19.00]	1.496 [38.00]	.819 [20.80]
24	1.752 [44.50]	1.610 [40.90]	.157 [4.00]	2.567 [65.20]	.811 [20.60]	1.614 [41.00]	.969 [24.60]
28	1.969 [50.00]	1.839 [46.70]	.157 [4.00]	2.567 [65.20]	.811 [20.60]	1.890 [48.00]	1.063 [27.00]
32	2.224 [56.50]	2.102 [53.40]	.157 [4.00]	2.630 [66.80]	.874 [22.20]	2.126 [54.00]	1.311 [33.30]
36	2.480 [63.00]	2.346 [59.60]	.157 [4.00]	2.630 [66.80]	.874 [22.20]	2.402 [61.00]	1.516 [38.50]
40	2.717 [69.00]	2.579 [65.50]	.157 [4.00]	2.630 [66.80]	.874 [22.20]	2.677 [68.00]	1.811 [46.00]

Dimensions are in Inches [mm]

IN-LINE RECEPTACLE

01ASBT*/01SBT*

FRONT VIEW

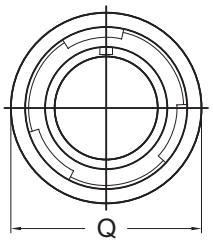

SIDE VIEW

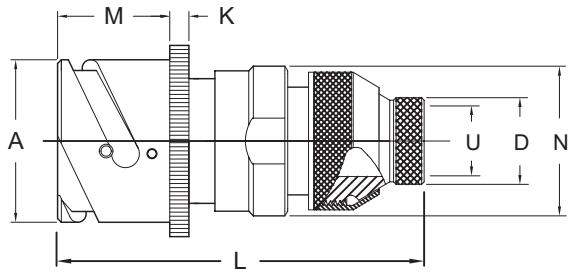

SCPB01ASBT* **Non-environmental, no grommet**
SCPB01SBT* **Environmental with grommet**

SHELL SIZE	FRONT VIEW	SIDE VIEW						
	Q MAX	A +.000 [+0.00] -.006 [-0.15]	D MAX	K ±.008 [±0.2]	L MAX	M +.016 [+0.4] -.000 [-0.0]	N MAX	U MIN
10SL	.886 [22.50]	.717 [18.20]	.437 [11.10]	.110 [2.80]	2.402 [61.00]	.559 [14.20]	.866 [22.00]	.299 [7.60]
14S	1.161 [29.50]	.969 [24.60]	.563 [14.30]	.126 [3.20]	2.520 [64.00]	.559 [14.20]	.984 [25.00]	.425 [10.80]
16S	1.240 [31.50]	1.079 [27.40]	.626 [15.90]	.126 [3.20]	2.756 [70.00]	.559 [14.20]	1.102 [28.00]	.488 [12.40]
16	1.240 [31.50]	1.079 [27.40]	.626 [15.90]	.126 [3.20]	3.150 [80.00]	.748 [19.00]	1.102 [28.00]	.488 [12.40]
18	1.358 [34.50]	1.213 [30.80]	.752 [19.10]	.157 [4.00]	3.150 [80.00]	.748 [19.00]	1.220 [31.00]	.614 [15.60]
20	1.476 [37.50]	1.346 [34.20]	.878 [22.30]	.157 [4.00]	3.150 [80.00]	.748 [19.00]	1.378 [35.00]	.736 [18.70]
22	1.594 [40.50]	1.472 [37.40]	1.000 [25.40]	.157 [4.00]	3.150 [80.00]	.748 [19.00]	1.496 [38.00]	.862 [21.90]
24	1.752 [44.50]	1.610 [40.90]	1.126 [28.60]	.157 [4.00]	3.150 [80.00]	.811 [20.60]	1.614 [41.00]	.988 [25.10]
28	1.969 [50.00]	1.839 [46.70]	1.252 [31.80]	.157 [4.00]	3.150 [80.00]	.811 [20.60]	1.890 [48.00]	1.114 [28.30]
32	2.224 [56.50]	2.102 [53.40]	1.441 [36.60]	.157 [4.00]	3.150 [80.00]	.874 [22.20]	2.126 [54.00]	1.114 [28.30]
36	2.480 [63.00]	2.346 [59.60]	1.752 [44.50]	.157 [4.00]	3.346 [85.00]	.874 [22.20]	2.402 [61.00]	1.614 [41.00]
40	2.717 [69.00]	2.579 [65.50]	2.000 [50.80]	.157 [4.00]	3.346 [85.00]	.874 [22.20]	2.677 [68.00]	1.598 [40.60]

Dimensions are in Inches [mm]
1. Dimension "L" will vary from the values indicated for some special insert configurations.

01CF*/01CFZ*

FRONT VIEW

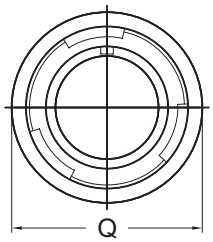

SIDE VIEW

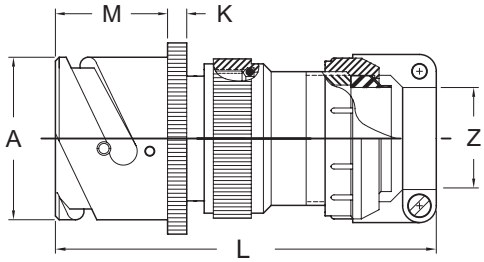

SCPB01CF* **Environmental, no grommet**
SCPB01CFZ* **Environmental with grommet**

SHELL SIZE	FRONT VIEW	SIDE VIEW					
	Q MAX	A +.000 [+0.00] -.006 [-0.15]	K ±.008 [±0.2]	L MAX	M +.016 [+0.4] -.000 [-0.0]	Z OPEN	Z CLOSED
10SL	.886 [22.50]	.717 [18.20]	.110 [2.80]	2.874 [73.0]	.559 [14.20]	.312 [7.93]	.094 [2.38]
14S	1.161 [29.50]	.969 [24.60]	.126 [3.20]	3.031 [77.0]	.559 [14.20]	.438 [11.12]	.230 [5.84]
16S	1.240 [31.50]	1.079 [27.40]	.126 [3.20]	3.031 [77.0]	.559 [14.20]	.531 [13.48]	.315 [8.00]
16	1.240 [31.50]	1.079 [27.40]	.126 [3.20]	3.465 [88.0]	.748 [19.00]	.531 [13.48]	.315 [8.00]
18	1.358 [34.50]	1.213 [30.80]	.157 [4.00]	3.583 [91.0]	.748 [19.00]	.625 [15.87]	.378 [9.60]
20	1.476 [37.50]	1.346 [34.20]	.157 [4.00]	3.583 [91.0]	.748 [19.00]	.748 [19.00]	.445 [11.30]
22	1.594 [40.50]	1.472 [37.40]	.157 [4.00]	3.622 [92.0]	.748 [19.00]	.748 [19.00]	.445 [11.30]
24	1.752 [44.50]	1.610 [40.90]	.157 [4.00]	3.819 [97.0]	.811 [20.60]	.937 [23.80]	.610 [15.50]
28	1.969 [50.00]	1.839 [46.70]	.157 [4.00]	4.055 [103.0]	.811 [20.60]	.937 [23.80]	.610 [15.50]
32	2.224 [56.50]	2.102 [53.40]	.157 [4.00]	4.449 [113.0]	.874 [22.20]	1.250 [31.75]	.921 [23.40]
36	2.480 [63.00]	2.346 [59.60]	.157 [4.00]	4.724 [120.0]	.874 [22.20]	1.378 [35.00]	.921 [23.40]
40	2.717 [69.00]	2.579 [65.50]	.157 [4.00]	5.315 [135.0]	.874 [22.20]	1.624 [41.25]	1.177 [29.90]

Dimensions are in Inches [mm]

SPACECRAFT COMPONENTS CORP.
3040 Clayton Street
North Las Vegas, NV 89032
Phone: 702.851.7600
Fax: 702.851.7620
Email: salesinfo@spacecraft.com
Web: www.spacecraft.com

01FR**(C)

FRONT VIEW

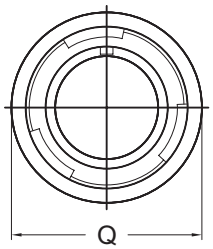

SIDE VIEW

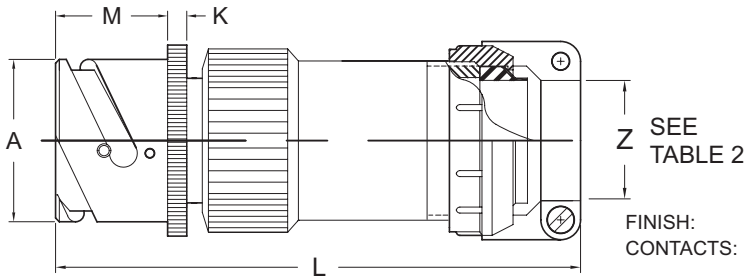

FINISH: BLACK ANODIZE
CONTACTS: F80 SILVER PLATED CRIMP CONTACTS

EXAMPLE PART NUMBER: SCPB01FR24-28P-08C

SHELL SIZE	FRONT VIEW Q MAX	SIDE VIEW A +.000 [+0.00] -.006 [-0.15]	K ±.008 [±0.2]	L	M +.016 [+0.4] -.000 [-0.0]
10SL	.886 [22.50]	.717 [18.20]	.110 [2.80]	Dimension L is dependent on the back-shell used, the cable range and the fitting used. **Consult factory.**	.559 [14.20]
14S	1.161 [29.50]	.969 [24.60]	.126 [3.20]		.559 [14.20]
16S	1.240 [31.50]	1.079 [27.40]	.126 [3.20]		.559 [14.20]
16	1.240 [31.50]	1.079 [27.40]	.126 [3.20]		.748 [19.00]
18	1.358 [34.50]	1.213 [30.80]	.157 [4.00]		.748 [19.00]
20	1.476 [37.50]	1.346 [34.20]	.157 [4.00]		.748 [19.00]
22	1.594 [40.50]	1.472 [37.40]	.157 [4.00]		.748 [19.00]
24	1.752 [44.50]	1.610 [40.90]	.157 [4.00]		.811 [20.60]
28	1.969 [50.00]	1.839 [46.70]	.157 [4.00]		.811 [20.60]
32	2.224 [56.50]	2.102 [53.40]	.157 [4.00]		.874 [22.20]
36	2.480 [63.00]	2.346 [59.60]	.157 [4.00]		.874 [22.20]
40	2.717 [69.00]	2.579 [65.50]	.157 [4.00]		.874 [22.20]

Dimensions are in Inches [mm]

(XX) CLAMP CODE	Z CABLE RANGE OPEN	CLOSED
04C	.312 [7.92]	.094 [2.40]
06C	.438 [11.12]	.230 [5.84]
08C	.531 [13.48]	.315 [8.00]
10C	.625 [15.87]	.378 [9.60]
12C	.748 [19.00]	.445 [11.30]
16C	.937 [23.80]	.610 [15.50]
20C	1.250 [31.75]	.921 [23.40]
24C	1.378 [35.00]	.921 [23.40]
28C	1.624 [41.25]	1.177 [29.90]
32C	1.874 [47.60]	1.374 [34.90]

01FR**(PG)

FRONT VIEW

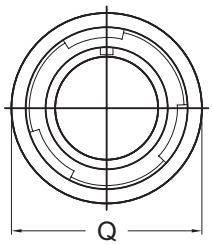

SIDE VIEW

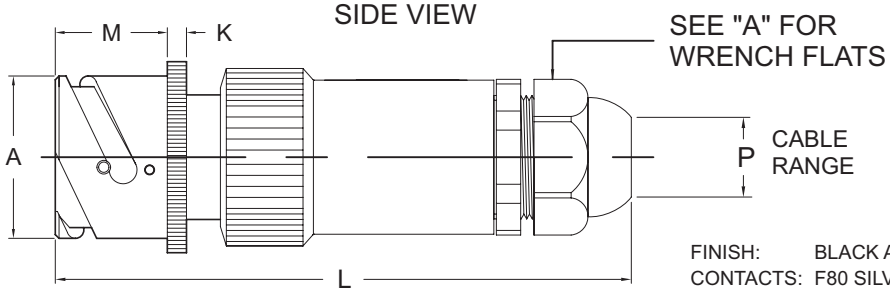

FINISH: BLACK ANODIZE
CONTACTS: F80 SILVER PLATED CRIMP CONTACTS

EXAMPLE PART NUMBER: SCPB01FR24-28P-11R

SHELL SIZE	FRONT VIEW Q MAX	SIDE VIEW A +.000 [+0.00] -.006 [-0.15]	K ±.008 [±0.2]	L	M +.016 [+0.4] -.000 [-0.0]
10SL	.886 [22.50]	.717 [18.20]	.110 [2.80]	Dimension L is dependent on the back-shell used, the cable range and the fitting used. **Consult factory.**	.559 [14.20]
14S	1.161 [29.50]	.969 [24.60]	.126 [3.20]		.559 [14.20]
16S	1.240 [31.50]	1.079 [27.40]	.126 [3.20]		.559 [14.20]
16	1.240 [31.50]	1.079 [27.40]	.126 [3.20]		.748 [19.00]
18	1.358 [34.50]	1.213 [30.80]	.157 [4.00]		.748 [19.00]
20	1.476 [37.50]	1.346 [34.20]	.157 [4.00]		.748 [19.00]
22	1.594 [40.50]	1.472 [37.40]	.157 [4.00]		.748 [19.00]
24	1.752 [44.50]	1.610 [40.90]	.157 [4.00]		.811 [20.60]
28	1.969 [50.00]	1.839 [46.70]	.157 [4.00]		.811 [20.60]
32	2.224 [56.50]	2.102 [53.40]	.157 [4.00]		.874 [22.20]
36	2.480 [63.00]	2.346 [59.60]	.157 [4.00]		.874 [22.20]
40	2.717 [69.00]	2.579 [65.50]	.157 [4.00]		.874 [22.20]

Dimensions are in Inches [mm]

(XX) CABLE CODE NO STRAIN RELIEF	TYPE	P CABLE RANGE		A WRENCH FLATS	
07R	PG7	.08-.20	[2.0-5.0]	.591	[15.0]
07	PG7	.12-.26	[3.0-6.5]	.591	[15.0]
09R	PG9	.08-.24	[2.0-6.0]	.748	[19.0]
09	PG9	.16-.31	[4.0-8.0]	.748	[19.0]
11R	PG11	.12-.28	[3.0-7.0]	.866	[22.0]
11	PG11	.20-.39	[5.0-10.0]	.866	[22.0]
13R	PG13.5	.20-.35	[5.0-9.0]	.945	[24.0]
13	PG13.5	.24-.47	[6.0-12.0]	.945	[24.0]
16R	PG16	.28-.47	[7.0-12.0]	1.063	[27.0]
16	PG16	.39-.55	[10.0-14.0]	1.063	[27.0]
21R	PG21	.35-.63	[9.0-16.0]	1.299	[33.0]
21	PG21	.51-.71	[13.0-18.0]	1.299	[33.0]
29R	PG29	.47-.79	[12.0-20.0]	1.654	[42.0]
29	PG29	.71-.98	[18.0-25.0]	1.654	[42.0]
36R	PG36	.79-1.02	[20.0-26.0]	2.087	[53.0]
36	PG36	.87-1.26	[22.0-32.0]	2.087	[53.0]
42	PG42	1.18-1.50	[30.0-38.0]	2.362	[60.0]
48	PG48	1.34-1.73	[34.0-44.0]	2.559	[65.0]

IN-LINE RECEPTACLE

01FR**(SPB)

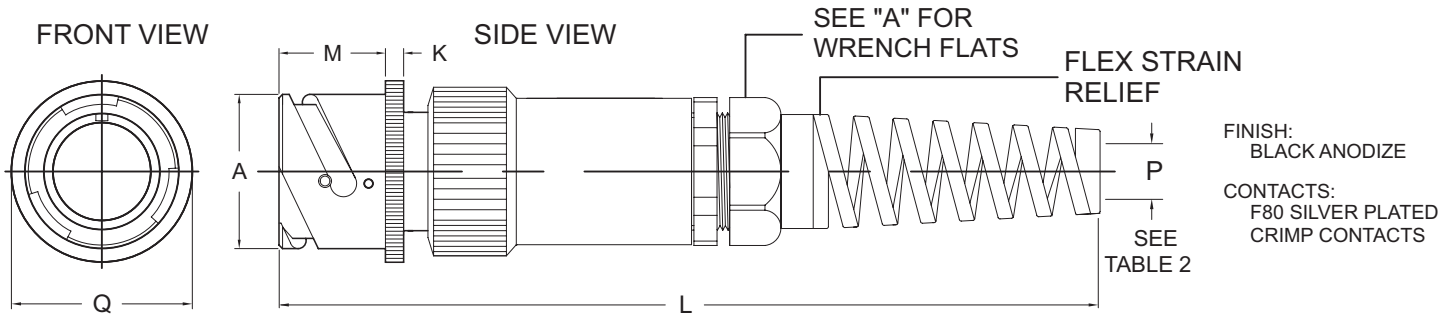

EXAMPLE PART NUMBER: SCPB01FR24-28P-SPB16R

SHELL SIZE	FRONT VIEW Q MAX	SIDE VIEW A +.000 [+0.00] -.006 [-0.15]	K ±.008 [±0.2]	L	M +.016 [+0.4] -.000 [-0.0]
10SL	.886 [22.50]	.717 [18.20]	.110 [2.80]	Dimension L is dependent on the back-shell used, the cable range and the fitting used. **Consult factory.**	.559 [14.20]
14S	1.161 [29.50]	.969 [24.60]	.126 [3.20]		.559 [14.20]
16S	1.240 [31.50]	1.079 [27.40]	.126 [3.20]		.559 [14.20]
16	1.240 [31.50]	1.079 [27.40]	.126 [3.20]		.748 [19.00]
18	1.358 [34.50]	1.213 [30.80]	.157 [4.00]		.748 [19.00]
20	1.476 [37.50]	1.346 [34.20]	.157 [4.00]		.748 [19.00]
22	1.594 [40.50]	1.472 [37.40]	.157 [4.00]		.748 [19.00]
24	1.752 [44.50]	1.610 [40.90]	.157 [4.00]		.811 [20.60]
28	1.969 [50.00]	1.839 [46.70]	.157 [4.00]		.811 [20.60]
32	2.224 [56.50]	2.102 [53.40]	.157 [4.00]		.874 [22.20]
36	2.480 [63.00]	2.346 [59.60]	.157 [4.00]		.874 [22.20]
40	2.717 [69.00]	2.579 [65.50]	.157 [4.00]		.874 [22.20]

Dimensions are in Inches [mm]

(XX) CABLE CODE FLEX STRAIN RELIEF	TYPE	P CABLE RANGE	A WRENCH FLATS
SPB07R	PG7	.08-.20 [2.0-5.0]	.591 [15.0]
SPB07	PG7	.12-.26 [3.0-6.5]	.591 [15.0]
SPB09R	PG9	.08-.24 [2.0-6.0]	.748 [19.0]
SPB09	PG9	.16-.31 [4.0-8.0]	.748 [19.0]
SPB11R	PG11	.12-.28 [3.0-7.0]	.866 [22.0]
SPB11	PG11	.20-.39 [5.0-10.0]	.866 [22.0]
SPB13R	PG13.5	.20-.35 [5.0-9.0]	.945 [24.0]
SPB13	PG13.5	.24-.47 [6.0-12.0]	.945 [24.0]
SPB16R	PG16	.28-.47 [7.0-12.0]	1.063 [27.0]
SPB16	PG16	.39-.55 [10.0-14.0]	1.063 [27.0]
SPB21R	PG21	.35-.63 [9.0-16.0]	1.299 [33.0]
SPB21	PG21	.51-.71 [13.0-18.0]	1.299 [33.0]
SPB29R	PG29	.47-.79 [12.0-20.0]	1.654 [42.0]
SPB29	PG29	.71-.98 [18.0-25.0]	1.654 [42.0]
SPB36R	PG36	.79-1.02 [20.0-26.0]	2.087 [53.0]
SPB36	PG36	.87-1.26 [22.0-32.0]	2.087 [53.0]
SPB42	PG42	1.18-1.50 [30.0-38.0]	2.362 [60.0]
SPB48	PG48	1.34-1.73 [34.0-44.0]	2.559 [65.0]

01LA*/01LR*

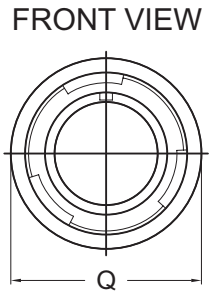

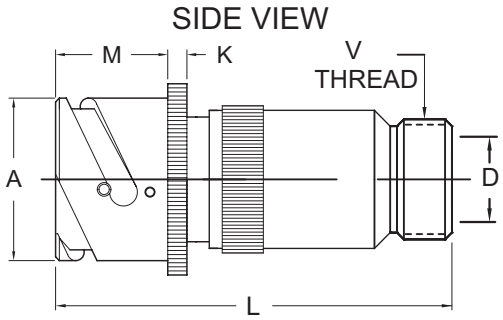

SCPB00LA* **Non-environmental, no grommet**
SCPB00LR* **Environmental with grommet**

SHELL SIZE	FRONT VIEW Q MAX	SIDE VIEW A +.000 [+0.00] -.006 [-0.15]	D MIN.	K ±.008 [±0.2]	L MAX.	M +.016 [+0.4] -.000 [-0.0]	V THREAD CLASS 2A
10SL	.886 [22.50]	.717 [18.20]	.323 [8.20]	.110 [2.80]	2.795 [71.00]	.559 [14.20]	5/8-24 UNEF
14S	1.161 [29.50]	.969 [24.60]	.437 [11.10]	.126 [3.20]	2.795 [71.00]	.559 [14.20]	3/4-20 UNEF
16S	1.240 [31.50]	1.079 [27.40]	.563 [14.30]	.126 [3.20]	2.795 [71.00]	.559 [14.20]	7/8-20 UNEF
16	1.240 [31.50]	1.079 [27.40]	.563 [14.30]	.126 [3.20]	3.425 [87.00]	.748 [19.00]	7/8-20 UNEF
18	1.358 [34.50]	1.213 [30.80]	.657 [16.70]	.157 [4.00]	3.425 [87.00]	.748 [19.00]	1-20 UNEF
20	1.476 [37.50]	1.346 [34.20]	.780 [19.80]	.157 [4.00]	3.425 [87.00]	.748 [19.00]	1 3/16-18 UNEF
22	1.594 [40.50]	1.472 [37.40]	.780 [19.80]	.157 [4.00]	3.425 [87.00]	.748 [19.00]	1 3/16-18 UNEF
24	1.752 [44.50]	1.610 [40.90]	1.000 [25.40]	.157 [4.00]	3.425 [87.00]	.811 [20.60]	1 7/16-18 UNEF
28	1.969 [50.00]	1.839 [46.70]	1.063 [27.00]	.157 [4.00]	3.740 [95.00]	.811 [20.60]	1 7/16-18 UNEF
32	2.224 [56.50]	2.102 [53.40]	1.280 [32.50]	.157 [4.00]	3.740 [95.00]	.874 [22.20]	1 3/4-18 UNS
36	2.480 [63.00]	2.346 [59.60]	1.406 [35.70]	.157 [4.00]	3.740 [95.00]	.874 [22.20]	2-18 UNS
40	2.717 [69.00]	2.579 [65.50]	1.772 [45.00]	.157 [4.00]	3.740 [95.00]	.874 [22.20]	2 1/4-16 UN

Dimensions are in Inches [mm]

SPACECRAFT COMPONENTS CORP.
3040 Clayton Street
North Las Vegas, NV 89032
Phone: 702.851.7600
Fax: 702.851.7620
Email: salesinfo@spacecraft.com
Web: www.spacecraft.com

01LAF*/01LF*

FRONT VIEW

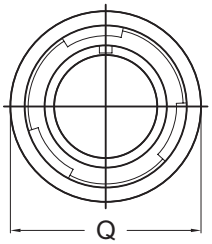

SIDE VIEW

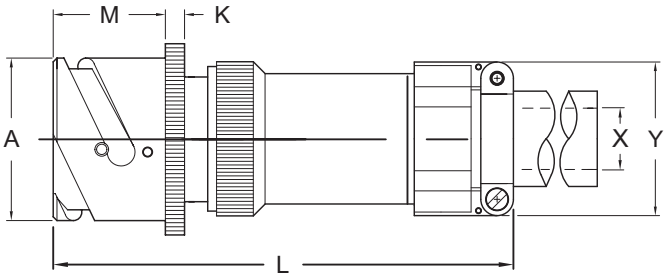

SCPB01LAF* Non-environmental, no grommet
SCPB01LF* Environmental with grommet

SHELL SIZE	FRONT VIEW	SIDE VIEW					
	Q MAX	A +.000 [+0.00] -.006 [-0.15]	K ±.008 [±0.2]	L MAX	M +.016 [+0.4] -.000 [-0.0]	X MIN	Y MAX
10SL	.886 [22.50]	.717 [18.20]	.110 [2.80]	3.622 [92.0]	.559 [14.20]	.220 [5.60]	.894 [22.70]
14S	1.161 [29.50]	.969 [24.60]	.126 [3.20]	3.661 [93.0]	.559 [14.20]	.311 [7.90]	1.083 [27.50]
16S	1.240 [31.50]	1.079 [27.40]	.126 [3.20]	3.740 [95.0]	.559 [14.20]	.433 [11.00]	1.181 [30.00]
16	1.240 [31.50]	1.079 [27.40]	.126 [3.20]	4.370 [111.0]	.748 [19.00]	.433 [11.00]	1.181 [30.00]
18	1.358 [34.50]	1.213 [30.80]	.157 [4.00]	4.370 [111.0]	.748 [19.00]	.559 [14.20]	1.268 [32.20]
20	1.476 [37.50]	1.346 [34.20]	.157 [4.00]	4.370 [111.0]	.748 [19.00]	.622 [15.80]	1.476 [37.50]
22	1.594 [40.50]	1.472 [37.40]	.157 [4.00]	4.370 [111.0]	.748 [19.00]	.622 [15.80]	1.476 [37.50]
24	1.752 [44.50]	1.610 [40.90]	.157 [4.00]	4.449 [113.0]	.811 [20.60]	.748 [19.00]	1.705 [43.30]
28	1.969 [50.00]	1.839 [46.70]	.157 [4.00]	4.764 [121.0]	.811 [20.60]	.748 [19.00]	1.705 [43.30]
32	2.224 [56.50]	2.102 [53.40]	.157 [4.00]	4.843 [123.0]	.874 [22.20]	.937 [23.80]	2.035 [51.70]
36	2.480 [63.00]	2.346 [59.60]	.157 [4.00]	4.921 [125.0]	.874 [22.20]	1.248 [31.70]	2.283 [58.00]
40	2.717 [69.00]	2.579 [65.50]	.157 [4.00]	5.433 [138.0]	.874 [22.20]	1.374 [34.90]	2.579 [65.50]

Dimensions are in Inches [mm]

01LCG*/01LC*

FRONT VIEW

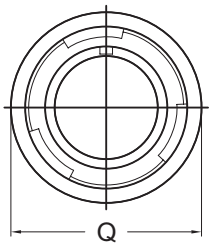

SIDE VIEW

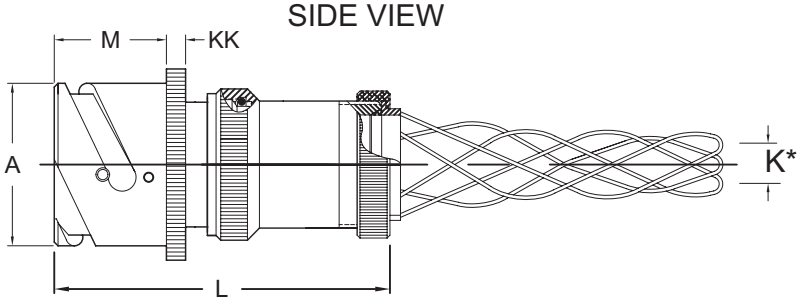

SCPB01LCG* Environmental, no grommet
SCPB01LC* Environmental with grommet

SHELL SIZE	FRONT VIEW	SIDE VIEW			
	Q MAX	A +.000 [+0.00] -.006 [-0.15]	KK ±.008 [±0.2]	L1 MAX	M +.016 [+0.4] -.000 [-0.0]
10SL	.886 [22.50]	.717 [18.20]	.110 [2.80]	3.937 [100.0]	.559 [14.20]
14S	1.161 [29.50]	.969 [24.60]	.126 [3.20]	3.937 [100.0]	.559 [14.20]
16S	1.240 [31.50]	1.079 [27.40]	.126 [3.20]	3.937 [100.0]	.559 [14.20]
16	1.240 [31.50]	1.079 [27.40]	.126 [3.20]	4.331 [110.0]	.748 [19.00]
18	1.358 [34.50]	1.213 [30.80]	.157 [4.00]	4.331 [110.0]	.748 [19.00]
20	1.476 [37.50]	1.346 [34.20]	.157 [4.00]	4.567 [116.0]	.748 [19.00]
22	1.594 [40.50]	1.472 [37.40]	.157 [4.00]	4.567 [116.0]	.748 [19.00]
24	1.752 [44.50]	1.610 [40.90]	.157 [4.00]	4.724 [120.0]	.811 [20.60]
28	1.969 [50.00]	1.839 [46.70]	.157 [4.00]	5.079 [129.0]	.811 [20.60]
32	2.224 [56.50]	2.102 [53.40]	.157 [4.00]	5.709 [145.0]	.874 [22.20]
36	2.480 [63.00]	2.346 [59.60]	.157 [4.00]	5.709 [145.0]	.874 [22.20]
40	2.717 [69.00]	2.579 [65.50]	.157 [4.00]	5.709 [145.0]	.874 [22.20]

Dimensions are in Inches [mm]

K*	CABLE RANGE	
	MIN	MAX
K0	.250 [6.35]	.375 [9.53]
K1	.375 [9.53]	.500 [12.70]
K2	.500 [12.70]	.625 [15.87]
K3	.625 [15.87]	.750 [19.05]
K4	.750 [19.05]	.875 [22.23]
K5	.875 [22.23]	1.000 [25.40]
K6	1.000 [25.40]	1.120 [28.45]
K7	1.120 [28.45]	1.250 [31.75]
K8	1.290 [32.77]	1.500 [38.10]
K9	1.560 [39.62]	1.625 [41.28]
K10	1.625 [41.28]	1.750 [44.45]

1. Dimension "L" will vary from the values indicated with escalating or de-escalating backshells and some special insert configurations.

IN-LINE RECEPTACLE

01LCF*/01LCFZ*

FRONT VIEW

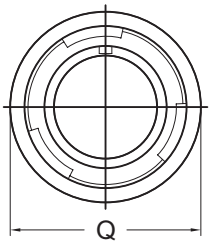

SIDE VIEW

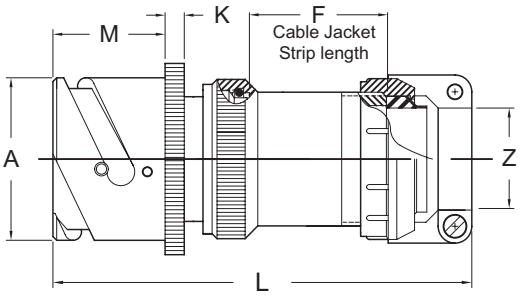

SCPB01LCF* **Environmental, no grommet**
SCPB01LCFZ* **Environmental with grommet**

SHELL SIZE	FRONT VIEW	SIDE VIEW						
	Q MAX	A +.000 [+0.00] -.006 [-0.15]	F REF	K ±.008 [±0.2]	L MAX	M +.016 [+0.4] -.000 [-0.0]	Z OPEN	Z CLOSED
10SL	.886 [22.50]	.717 [18.20]	1.654 [42.00]	.110 [2.80]	3.976 [101.0]	.559 [14.20]	.312 [7.93]	.094 [2.38]
14S	1.161 [29.50]	.969 [24.60]	1.677 [42.60]	.126 [3.20]	3.976 [101.0]	.559 [14.20]	.438 [11.12]	.230 [5.84]
16S	1.240 [31.50]	1.079 [27.40]	1.677 [42.60]	.126 [3.20]	3.976 [101.0]	.559 [14.20]	.531 [13.48]	.315 [8.00]
16	1.240 [31.50]	1.079 [27.40]	1.677 [42.60]	.126 [3.20]	4.488 [114.0]	.748 [19.00]	.531 [13.48]	.315 [8.00]
18	1.358 [34.50]	1.213 [30.80]	1.803 [45.80]	.157 [4.00]	4.685 [119.0]	.748 [19.00]	.625 [15.87]	.378 [9.60]
20	1.476 [37.50]	1.346 [34.20]	1.807 [45.90]	.157 [4.00]	4.685 [119.0]	.748 [19.00]	.748 [19.00]	.445 [11.30]
22	1.594 [40.50]	1.472 [37.40]	1.807 [45.90]	.157 [4.00]	4.685 [119.0]	.748 [19.00]	.748 [19.00]	.445 [11.30]
24	1.752 [44.50]	1.610 [40.90]	1.752 [44.50]	.157 [4.00]	4.882 [124.0]	.811 [20.60]	.937 [23.80]	.610 [15.50]
28	1.969 [50.00]	1.839 [46.70]	1.949 [49.50]	.157 [4.00]	5.118 [130.0]	.811 [20.60]	.937 [23.80]	.610 [15.50]
32	2.224 [56.50]	2.102 [53.40]	1.953 [49.60]	.157 [4.00]	5.394 [137.0]	.874 [22.20]	1.250 [31.75]	.921 [23.40]
36	2.480 [63.00]	2.346 [59.60]	1.969 [50.00]	.157 [4.00]	5.669 [144.0]	.874 [22.20]	1.378 [35.00]	.921 [23.40]
40	2.717 [69.00]	2.579 [65.50]	1.969 [50.00]	.157 [4.00]	5.669 [144.0]	.874 [22.20]	1.624 [41.25]	1.177 [29.90]

Dimensions are in Inches [mm]

01NMG*/01NM*

FRONT VIEW

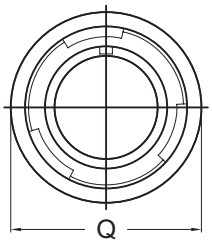

SIDE VIEW

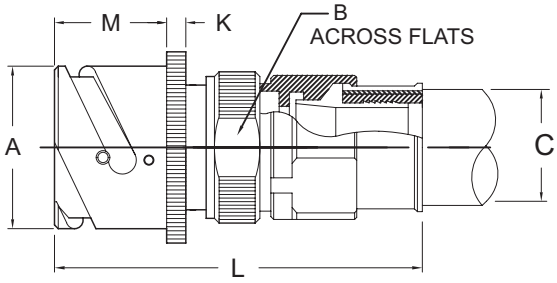

SCPB01NMG* **Environmental, no grommet**
SCPB01NM* **Environmental with grommet**

SHELL SIZE	FRONT VIEW	SIDE VIEW				
	Q MAX	A +.000 [+0.00] -.006 [-0.15]	B ACROSS FLATS	K ±.008 [±0.2]	L	M +.016 [+0.4] -.000 [-0.0]
10SL	.886 [22.50]	.717 [18.20]	.701 [17.80]	.110 [2.80]	Dimension L is dependent on conduit size used with each shell size. **Consult factory**	.559 [14.20]
14S	1.161 [29.50]	.969 [24.60]	.937 [23.80]	.126 [3.20]		.559 [14.20]
16S	1.240 [31.50]	1.079 [27.40]	1.000 [25.40]	.126 [3.20]		.559 [14.20]
16	1.240 [31.50]	1.079 [27.40]	1.000 [25.40]	.126 [3.20]		.748 [19.00]
18	1.358 [34.50]	1.213 [30.80]	1.126 [28.60]	.157 [4.00]		.748 [19.00]
20	1.476 [37.50]	1.346 [34.20]	1.248 [31.70]	.157 [4.00]		.748 [19.00]
22	1.594 [40.50]	1.472 [37.40]	1.374 [34.90]	.157 [4.00]		.748 [19.00]
24	1.752 [44.50]	1.610 [40.90]	1.500 [38.10]	.157 [4.00]		.811 [20.60]
28	1.969 [50.00]	1.839 [46.70]	1.748 [44.40]	.157 [4.00]		.811 [20.60]
32	2.224 [56.50]	2.102 [53.40]	2.000 [50.80]	.157 [4.00]		.874 [22.20]
36	2.480 [63.00]	2.346 [59.60]	2.248 [57.10]	.157 [4.00]		.874 [22.20]
40	2.717 [69.00]	2.579 [65.50]	2.437 [61.90]	.157 [4.00]		.874 [22.20]

Dimensions are in Inches [mm]

CODE (***)	AVAILABLE CONDUIT SIZES C
(038)	3/8 [9.52]
(050)	1/2 [12.70]
(075)	3/4 [19.05]
(100)	1 [25.40]
(125)	1 1/4 [31.75]
(150)	1 1/2 [38.10]
(200)	2 [50.80]

(***) Conduit Size must be specified as part of the connector part number using Conduit Code

SPACECRAFT COMPONENTS CORP.
3040 Clayton Street
North Las Vegas, NV 89032
Phone: 702.851.7600
Fax: 702.851.7620
Email: salesinfo@spacecraft.com
Web: www.spacecraft.com

01SL*/01SL1*

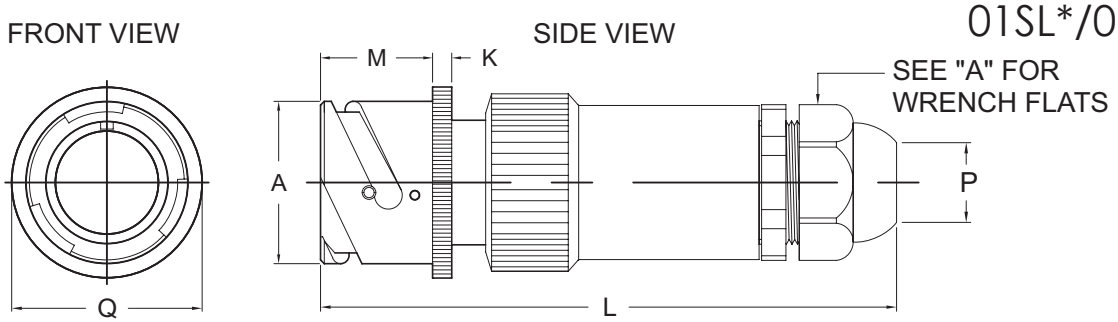

SCPB01SL* **Environmental, no grommet**
SCPB01SL1* **Environmental with grommet**

SHELL SIZE	FRONT VIEW	SIDE VIEW			
	Q MAX	A +.000 [+0.00] -.006 [-0.15]	K ±.008 [±0.2]	L	M +.016 [+0.4] -.000 [-0.0]
10SL	.886 [22.50]	.717 [18.20]	.110 [2.80]	Dimension L is dependent on the back-shell used, the cable range and the fitting used. **Consult factory.**	.559 [14.20]
14S	1.161 [29.50]	.969 [24.60]	.126 [3.20]		.559 [14.20]
16S	1.240 [31.50]	1.079 [27.40]	.126 [3.20]		.559 [14.20]
16	1.240 [31.50]	1.079 [27.40]	.126 [3.20]		.748 [19.00]
18	1.358 [34.50]	1.213 [30.80]	.157 [4.00]		.748 [19.00]
20	1.476 [37.50]	1.346 [34.20]	.157 [4.00]		.748 [19.00]
22	1.594 [40.50]	1.472 [37.40]	.157 [4.00]		.748 [19.00]
24	1.752 [44.50]	1.610 [40.90]	.157 [4.00]		.811 [20.60]
28	1.969 [50.00]	1.839 [46.70]	.157 [4.00]		.811 [20.60]
32	2.224 [56.50]	2.102 [53.40]	.157 [4.00]		.874 [22.20]
36	2.480 [63.00]	2.346 [59.60]	.157 [4.00]		.874 [22.20]
40	2.717 [69.00]	2.579 [65.50]	.157 [4.00]		.874 [22.20]

Dimensions are in Inches [mm]

(XX) CABLE CODE NO STRAIN RELIEF	TYPE	P CABLE RANGE		A WRENCH FLATS	
07R	PG7	.08-.20	[2.0-5.0]	.591	[15.0]
07	PG7	.12-.26	[3.0-6.5]	.591	[15.0]
09R	PG9	.08-.24	[2.0-6.0]	.748	[19.0]
09	PG9	.16-.31	[4.0-8.0]	.748	[19.0]
11R	PG11	.12-.28	[3.0-7.0]	.866	[22.0]
11	PG11	.20-.39	[5.0-10.0]	.866	[22.0]
13R	PG13.5	.20-.35	[5.0-9.0]	.945	[24.0]
13	PG13.5	.24-.47	[6.0-12.0]	.945	[24.0]
16R	PG16	.28-.47	[7.0-12.0]	1.063	[27.0]
16	PG16	.39-.55	[10.0-14.0]	1.063	[27.0]
21R	PG21	.35-.63	[9.0-16.0]	1.299	[33.0]
21	PG21	.51-.71	[13.0-18.0]	1.299	[33.0]
29R	PG29	.47-.79	[12.0-20.0]	1.654	[42.0]
29	PG29	.71-.98	[18.0-25.0]	1.654	[42.0]
36R	PG36	.79-1.02	[20.0-26.0]	2.087	[53.0]
36	PG36	.87-1.26	[22.0-32.0]	2.087	[53.0]
42	PG42	1.18-1.50	[30.0-38.0]	2.362	[60.0]
48	PG48	1.34-1.73	[34.0-44.0]	2.559	[65.0]

Dimensions are in Inches [mm]

01SLX*/01SLX1*

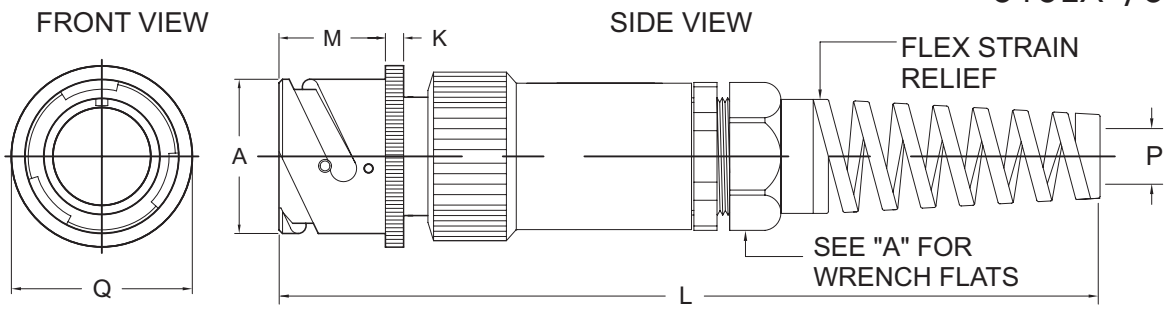

SCPB01SLX* **Environmental, no grommet**
SCPB01SLX1* **Environmental with grommet**

SHELL SIZE	FRONT VIEW	SIDE VIEW			
	Q MAX	A +.000 [+0.00] -.006 [-0.15]	K ±.008 [±0.2]	L	M +.016 [+0.4] -.000 [-0.0]
10SL	.886 [22.50]	.717 [18.20]	.110 [2.80]	Dimension L is dependent on the back-shell used, the cable range and the fitting used. **Consult factory.**	.559 [14.20]
14S	1.161 [29.50]	.969 [24.60]	.126 [3.20]		.559 [14.20]
16S	1.240 [31.50]	1.079 [27.40]	.126 [3.20]		.559 [14.20]
16	1.240 [31.50]	1.079 [27.40]	.126 [3.20]		.748 [19.00]
18	1.358 [34.50]	1.213 [30.80]	.157 [4.00]		.748 [19.00]
20	1.476 [37.50]	1.346 [34.20]	.157 [4.00]		.748 [19.00]
22	1.594 [40.50]	1.472 [37.40]	.157 [4.00]		.748 [19.00]
24	1.752 [44.50]	1.610 [40.90]	.157 [4.00]		.811 [20.60]
28	1.969 [50.00]	1.839 [46.70]	.157 [4.00]		.811 [20.60]
32	2.224 [56.50]	2.102 [53.40]	.157 [4.00]		.874 [22.20]
36	2.480 [63.00]	2.346 [59.60]	.157 [4.00]		.874 [22.20]
40	2.717 [69.00]	2.579 [65.50]	.157 [4.00]		.874 [22.20]

Dimensions are in Inches [mm]

(XX) CABLE CODE FLEX STRAIN RELIEF	TYPE	P CABLE RANGE		A WRENCH FLATS	
SPB07R	PG7	.08-.20	[2.0-5.0]	0.591	[15.0]
SPB07	PG7	.12-.26	[3.0-6.5]	0.591	[15.0]
SPB09R	PG9	.08-.24	[2.0-6.0]	0.748	[19.0]
SPB09	PG9	.16-.31	[4.0-8.0]	0.748	[19.0]
SPB11R	PG11	.12-.28	[3.0-7.0]	0.866	[22.0]
SPB11	PG11	.20-.39	[5.0-10.0]	0.866	[22.0]
SPB13R	PG13.5	.20-.35	[5.0-9.0]	0.945	[24.0]
SPB13	PG13.5	.24-.47	[6.0-12.0]	0.945	[24.0]
SPB16R	PG16	.28-.47	[7.0-12.0]	1.063	[27.0]
SPB16	PG16	.39-.55	[10.0-14.0]	1.063	[27.0]
SPB21R	PG21	.35-.63	[9.0-16.0]	1.299	[33.0]
SPB21	PG21	.51-.71	[13.0-18.0]	1.299	[33.0]
SPB29R	PG29	.47-.79	[12.0-20.0]	1.654	[42.0]
SPB29	PG29	.71-.98	[18.0-25.0]	1.654	[42.0]
SPB36R	PG36	.79-1.02	[20.0-26.0]	2.087	[53.0]
SPB36	PG36	.87-1.26	[22.0-32.0]	2.087	[53.0]
SPB42	PG42	1.18-1.50	[30.0-38.0]	2.362	[60.0]
SPB48	PG48	1.34-1.73	[34.0-44.0]	2.559	[65.0]

Dimensions are in Inches [mm]

IN-LINE RECEPTACLE

01STG*/01ST*

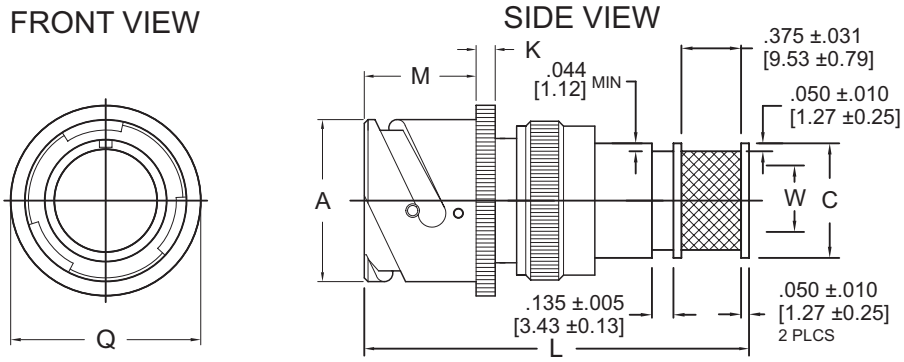

SCPB01STG* **Environmental, no grommet with spin coupling nut backshell**
SCPB01ST* **Environmental with grommet with spin coupling nut backshell**

SHELL SIZE	FRONT VIEW	SIDE VIEW					
	Q MAX	A +.000 [+0.00] -.006 [-0.15]	C MAX	K ±.008 [±0.2]	L MAX	M +.016 [+0.4] -.000 [-0.0]	W MIN
10SL	.886 [22.50]	.717 [18.20]	.500 [12.70]	.110 [2.80]	2.402 [61.00]	.559 [14.20]	.312 [7.92]
14S	1.161 [29.50]	.969 [24.60]	.630 [16.00]	.126 [3.20]	2.425 [61.60]	.559 [14.20]	.440 [11.18]
16S	1.240 [31.50]	1.079 [27.40]	.700 [17.78]	.126 [3.20]	2.402 [61.00]	.559 [14.20]	.500 [12.70]
16	1.240 [31.50]	1.079 [27.40]	.700 [17.78]	.126 [3.20]	2.626 [66.70]	.748 [19.00]	.500 [12.70]
18	1.358 [34.50]	1.213 [30.80]	.810 [20.57]	.157 [4.00]	2.626 [66.70]	.748 [19.00]	.625 [15.87]
20	1.476 [37.50]	1.346 [34.20]	.810 [20.57]	.157 [4.00]	2.626 [66.70]	.748 [19.00]	.625 [15.87]
22	1.594 [40.50]	1.472 [37.40]	.870 [22.10]	.157 [4.00]	2.626 [66.70]	.748 [19.00]	.690 [17.53]
24	1.752 [44.50]	1.610 [40.90]	.940 [23.87]	.157 [4.00]	2.701 [68.60]	.811 [20.60]	.750 [19.05]
28	1.969 [50.00]	1.839 [46.70]	1.059 [26.90]	.157 [4.00]	2.701 [68.60]	.811 [20.60]	.875 [22.23]
32	2.224 [56.50]	2.102 [53.40]	Consult Sales	.157 [4.00]	Consult Sales	.874 [22.20]	Consult Sales
36	2.480 [63.00]	2.346 [59.60]		.157 [4.00]		.874 [22.20]	
40	2.717 [69.00]	2.579 [65.50]		.157 [4.00]		.874 [22.20]	

Dimensions are in Inches [mm]

01SUG*/01SU*

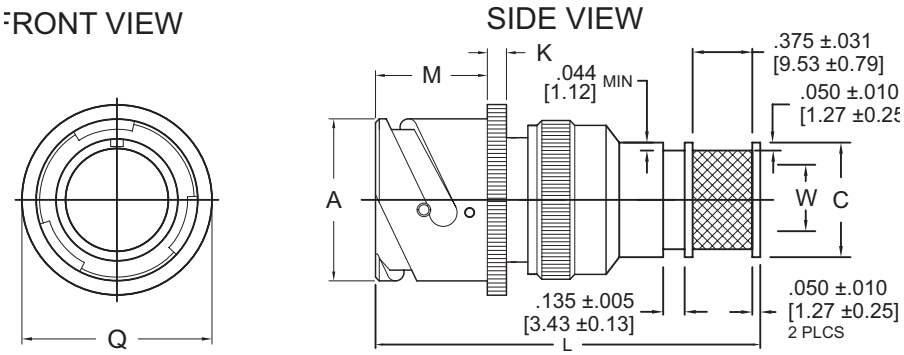

SCPB01SUG* **Environmental, no grommet with solid backshell**
SCPB01SU* **Environmental with grommet with solid backshell**

SHELL SIZE	FRONT VIEW	SIDE VIEW					
	Q MAX	A +.000 [+0.00] -.006 [-0.15]	C ±.008 [±0.2]	K ±.008 [±0.2]	L MAX	M +.016 [+0.4] -.000 [-0.0]	W ±.005 [±0.13]
10SL	.886 [22.50]	.717 [18.20]	.500 [12.70]	.110 [2.80]	2.402 [61.00]	.559 [14.20]	.312 [7.92]
14S	1.161 [29.50]	.969 [24.60]	.630 [16.00]	.126 [3.20]	2.425 [61.60]	.559 [14.20]	.440 [11.18]
16S	1.240 [31.50]	1.079 [27.40]	.700 [17.78]	.126 [3.20]	2.402 [61.00]	.559 [14.20]	.500 [12.70]
16	1.240 [31.50]	1.079 [27.40]	.700 [17.78]	.126 [3.20]	2.626 [66.70]	.748 [19.00]	.500 [12.70]
18	1.358 [34.50]	1.213 [30.80]	.810 [20.57]	.157 [4.00]	2.626 [66.70]	.748 [19.00]	.625 [15.87]
20	1.476 [37.50]	1.346 [34.20]	.810 [20.57]	.157 [4.00]	2.626 [66.70]	.748 [19.00]	.625 [15.87]
22	1.594 [40.50]	1.472 [37.40]	.870 [22.10]	.157 [4.00]	2.626 [66.70]	.748 [19.00]	.690 [17.53]
24	1.752 [44.50]	1.610 [40.90]	.940 [23.87]	.157 [4.00]	2.701 [68.60]	.811 [20.60]	.750 [19.05]
28	1.969 [50.00]	1.839 [46.70]	1.059 [26.90]	.157 [4.00]	2.701 [68.60]	.811 [20.60]	.875 [22.23]
32	2.224 [56.50]	2.102 [53.40]	Consult Sales	.157 [4.00]	Consult Sales	.874 [22.20]	Consult Sales
36	2.480 [63.00]	2.346 [59.60]		.157 [4.00]		.874 [22.20]	
40	2.717 [69.00]	2.579 [65.50]		.157 [4.00]		.874 [22.20]	

Dimensions are in Inches [mm]

SPACECRAFT COMPONENTS CORP.
3040 Clayton Street
North Las Vegas, NV 89032
Phone: 702.851.7600
Fax: 702.851.7620
Email: salesinfo@spacecraft.com
Web: www.spacecraft.com

01SV*

FRONT VIEW

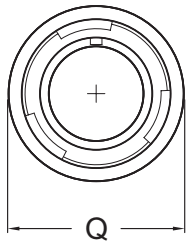

SIDE VIEW

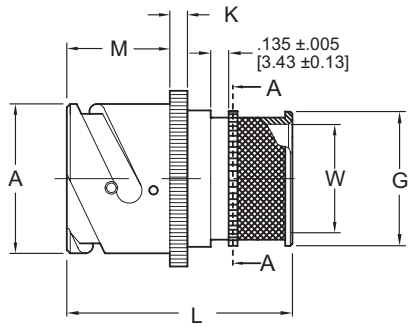

SHELL SIZES:
10SL, 14S & 16S
0.250 ±.005
[6.35 ±0.13]
FOR .125 BAND

SHELL SIZES:
16 -40
0.360 ±.005
[9.14 ±0.13]
FOR .240 BAND

SCPB01SV* Environmental, no grommet

SHELL SIZE	FRONT VIEW	SIDE VIEW							
	Q MAX	A +.000 [+0.00] -.006 [-0.15]	G ±.008 [±0.2]	K ±.008 [±0.2]	L MAX	M +.016 [+0.4] -.000 [-0.0]	W MIN	X ±.016 [±0.4]	
								.240 BAND	.120 BAND
10SL	.886 [22.50]	.717 [18.20]	.632 [16.10]	.110 [2.80]	1.320 [33.53]	.559 [14.20]	.475 [12.10]	–	.230 [5.80]
14S	1.161 [29.50]	.969 [24.60]	.755 [19.20]	.126 [3.20]	1.320 [33.53]	.559 [14.20]	.605 [15.40]	–	.230 [5.80]
16S	1.240 [31.50]	1.079 [27.40]	.880 [22.40]	.126 [3.20]	1.320 [33.53]	.559 [14.20]	.735 [18.70]	–	.230 [5.80]
16	1.240 [31.50]	1.079 [27.40]	.880 [22.40]	.126 [3.20]	1.685 [42.80]	.748 [19.00]	.735 [18.70]	.145 [3.70]	–
18	1.358 [34.50]	1.213 [30.80]	1.005 [25.50]	.157 [4.00]	1.685 [42.80]	.748 [19.00]	.860 [21.90]	.145 [3.70]	–
20	1.476 [37.50]	1.346 [34.20]	1.130 [28.70]	.157 [4.00]	1.685 [42.80]	.748 [19.00]	.975 [24.80]	.145 [3.70]	–
22	1.594 [40.50]	1.472 [37.40]	1.255 [31.90]	.157 [4.00]	1.685 [42.80]	.748 [19.00]	1.105 [28.10]	.145 [3.70]	–
24	1.752 [44.50]	1.610 [40.90]	1.380 [35.10]	.157 [4.00]	1.685 [42.80]	.811 [20.60]	1.230 [31.20]	.145 [3.70]	–
28	1.969 [50.00]	1.839 [46.70]	1.630 [41.40]	.157 [4.00]	1.725 [43.82]	.811 [20.60]	1.415 [35.90]	.185 [4.70]	–
32	2.224 [56.50]	2.102 [53.40]	1.880 [47.80]	.157 [4.00]	1.725 [43.82]	.874 [22.20]	1.695 [43.10]	.185 [4.70]	–
36	2.480 [63.00]	2.346 [59.60]	2.067 [52.50]	.157 [4.00]	1.725 [43.82]	.874 [22.20]	1.890 [48.00]	.185 [4.70]	–
40	2.717 [69.00]	2.579 [65.50]	2.317 [58.90]	.157 [4.00]	1.725 [43.82]	.874 [22.20]	2.120 [53.80]	.185 [4.70]	–

Dimensions are in Inches [mm]

01TRAC*

FRONT VIEW

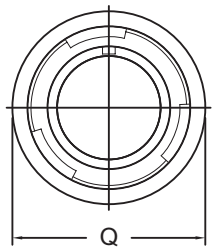

SIDE VIEW

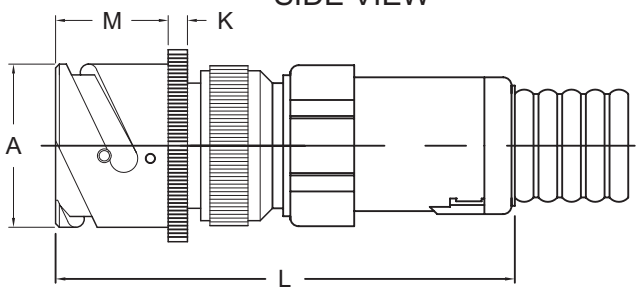

SCPB01TRAC* Environmental with grommet

SHELL SIZE	FRONT VIEW	SIDE VIEW			
	Q MAX	A +.000 [+0.00] -.006 [-0.15]	K ±.008 [±0.2]	L	M +.016 [+0.4] -.000 [-0.0]
10SL	.886 [22.50]	.717 [18.20]	.110 [2.80]	Dimension L is dependent on the back-shell used, the cable range and the fitting used. **Consult factory.**	.559 [14.20]
14S	1.161 [29.50]	.969 [24.60]	.126 [3.20]		.559 [14.20]
16S	1.240 [31.50]	1.079 [27.40]	.126 [3.20]		.559 [14.20]
16	1.240 [31.50]	1.079 [27.40]	.126 [3.20]		.748 [19.00]
18	1.358 [34.50]	1.213 [30.80]	.157 [4.00]		.748 [19.00]
20	1.476 [37.50]	1.346 [34.20]	.157 [4.00]		.748 [19.00]
22	1.594 [40.50]	1.472 [37.40]	.157 [4.00]		.748 [19.00]
24	1.752 [44.50]	1.610 [40.90]	.157 [4.00]		.811 [20.60]
28	1.969 [50.00]	1.839 [46.70]	.157 [4.00]		.811 [20.60]
32	2.224 [56.50]	2.102 [53.40]	.157 [4.00]		.874 [22.20]
36	2.480 [63.00]	2.346 [59.60]	.157 [4.00]		.874 [22.20]
40	2.717 [69.00]	2.579 [65.50]	.157 [4.00]		.874 [22.20]

Dimensions are in Inches [mm]

BOX MOUNT RECEPTACLE

02A*/02R*

MOUNTING HOLE OPTIONS

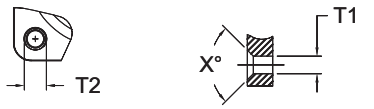

THREADED COUNTERSINK

MOUNTING HOLE CODES

CODE	MOUNTING HOLE TYPE
None	Thru holes
FF	Metric thread
UN	UNC thread
FS	Thru holes W/ Metric C'Sink (X=90°)
FSM	Thru holes W/ UN C'Sink (X=82°)

FRONT VIEW

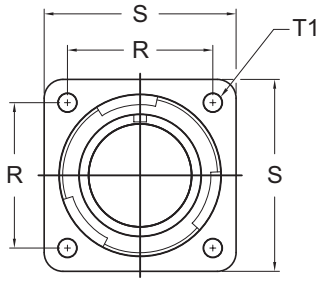

SIDE VIEW

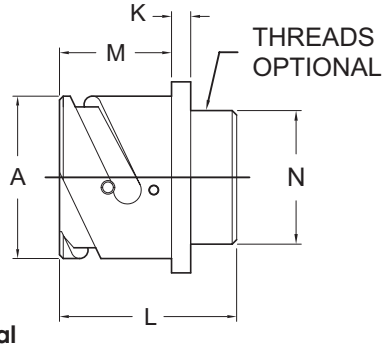

SCPB02A* **Non-environmental**
SCPB02R* **Environmental when used with sealing gasket**

SHELL SIZE	FRONT VIEW					SIDE VIEW				
	R ±.004 [±0.1]	S ±.012 [±0.3]	T1 +.004 [+0.1] -.000 [-0.0]	T2 THREAD METRIC	T2 THREAD UNC	A +.000 [+0.00] -.006 [-0.15]	K ±.008 [±0.2]	L ±.012 [±0.3]	M +.016 [+0.4] -.000 [-0.0]	N MAX
10SL	.717 [18.20]	1.000 [25.40]	.126 [3.20]	M4	8-32UNC	.717 [18.20]	.110 [2.80]	1.087 [27.60]	.559 [14.20]	.638 [16.20]
14S	.906 [23.00]	1.181 [30.00]	.126 [3.20]	M4	8-32UNC	.969 [24.60]	.126 [3.20]	1.087 [27.60]	.559 [14.20]	.756 [19.20]
16S	.969 [24.60]	1.280 [32.50]	.126 [3.20]	M4	8-32UNC	1.079 [27.40]	.126 [3.20]	1.087 [27.60]	.559 [14.20]	.882 [22.40]
16	.969 [24.60]	1.280 [32.50]	.126 [3.20]	M4	8-32UNC	1.079 [27.40]	.126 [3.20]	1.331 [33.80]	.748 [19.00]	.882 [22.40]
18	1.063 [27.00]	1.378 [35.00]	.126 [3.20]	M4	8-32UNC	1.213 [30.80]	.157 [4.00]	1.331 [33.80]	.748 [19.00]	1.008 [25.60]
20	1.157 [29.40]	1.496 [38.00]	.126 [3.20]	M4	8-32UNC	1.346 [34.20]	.157 [4.00]	1.331 [33.80]	.748 [19.00]	1.142 [29.00]
22	1.252 [31.80]	1.614 [41.00]	.126 [3.20]	M4	8-32UNC	1.472 [37.40]	.157 [4.00]	1.331 [33.80]	.748 [19.00]	1.268 [32.20]
24	1.374 [34.90]	1.752 [44.50]	.146 [3.70]	M4	10-24UNC	1.610 [40.90]	.157 [4.00]	1.409 [35.80]	.811 [20.60]	1.390 [35.30]
28	1.563 [39.70]	2.000 [50.80]	.146 [3.70]	M5	10-24UNC	1.839 [46.70]	.157 [4.00]	1.409 [35.80]	.811 [20.60]	1.630 [41.40]
32	1.752 [44.50]	2.244 [57.00]	.169 [4.30]	M5	1/4-20UNC	2.102 [53.40]	.157 [4.00]	1.469 [37.30]	.874 [22.20]	1.882 [47.80]
36	1.937 [49.20]	2.500 [63.50]	.169 [4.30]	M5	1/4-20UNC	2.346 [59.60]	.157 [4.00]	1.469 [37.30]	.874 [22.20]	2.130 [54.10]
40	2.185 [55.50]	2.748 [69.80]	.169 [4.30]	M5	1/4-20UNC	2.579 [65.50]	.157 [4.00]	1.469 [37.30]	.874 [22.20]	2.323 [59.00]

Dimensions are in Inches [mm]

02YM*

MOUNTING HOLE OPTIONS

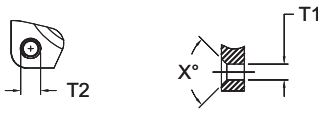

THREADED COUNTERSINK

MOUNTING HOLE CODES

CODE	MOUNTING HOLE TYPE
None	Thru holes
FF	Metric thread
UN	UNC thread
FS	Thru holes W/ Metric C'Sink (X=90°)
FSM	Thru holes W/ UN C'Sink (X=82°)

FRONT VIEW

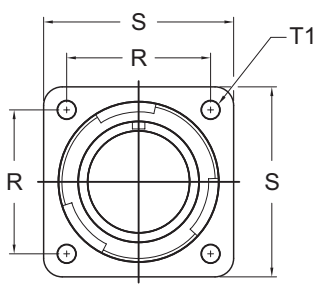

SIDE VIEW

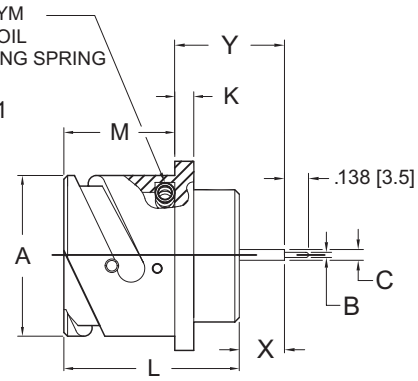

AVAILABLE CONTACT	B +0.00 [+0.00] -.002 [-0.05]	C +0.00 [+0.00] -0.10 [-.004]
SIZE 16S & 16	0.030 [0.75]	0.063 [1.6]
SIZE 12	0.071 [1.8]	0.134 [3.4]

Connectors are available only with contact sizes 16S, 16 and 12. For different contact sizes please consult factory.

SCPB02YM* **Environmental with PC tail contacts**
SCPBG02YM* **Environmental with PC tail contacts & ground spring**

SHELL SIZE	FRONT VIEW					SIDE VIEW											
	R ±.004 [±0.1]	S ±.012 [±0.3]	T1 +.004 [+0.1] -.000 [-0.0]	T2 THREAD METRIC	T2 THREAD UNC	A +.000 [+0.00] -.006 [-0.15]	K ±.008 [±0.2]	L ±.012 [±0.3]	M +.016 [+0.4] -.000 [-0.0]	TYPE YM X*	TYPE YM Y*	TYPE YM1 X*	TYPE YM1 Y*	TYPE YM2 X*	TYPE YM2 Y*	TYPE YM3 X*	TYPE YM3 Y*
10SL	.717 [18.20]	1.000 [25.40]	.126 [3.20]	M4	8-32UNC	.717 [18.20]	.110 [2.80]	1.087 [27.60]	.559 [14.20]	***.197 [5.00]***	***.724 [18.40]***	***.260 [6.60]***	***.787 [20.00]***	***.134 [3.40]***	***.661 [16.80]***	***.071 [1.80]***	***.598 [15.20]***
14S	.906 [23.00]	1.181 [30.00]	.126 [3.20]	M4	8-32UNC	.969 [24.60]	.126 [3.20]	1.087 [27.60]	.559 [14.20]	***.197 [5.00]***	***.724 [18.40]***	***.260 [6.60]***	***.787 [20.00]***	***.134 [3.40]***	***.661 [16.80]***	***.071 [1.80]***	***.598 [15.20]***
16S	.969 [24.60]	1.280 [32.50]	.126 [3.20]	M4	8-32UNC	1.079 [27.40]	.126 [3.20]	1.087 [27.60]	.559 [14.20]	***.197 [5.00]***	***.724 [18.40]***	***.260 [6.60]***	***.787 [20.00]***	***.134 [3.40]***	***.661 [16.80]***	***.071 [1.80]***	***.598 [15.20]***
16	.969 [24.60]	1.280 [32.50]	.126 [3.20]	M4	8-32UNC	1.079 [27.40]	.126 [3.20]	1.331 [33.80]	.748 [19.00]	.197 [5.00]	.780 [19.80]	.260 [6.60]	.843 [21.40]	***.134 [3.40]***	***.717 [18.20]***	***.071 [1.80]***	***.654 [16.60]***
18	1.063 [27.00]	1.378 [35.00]	.126 [3.20]	M4	8-32UNC	1.213 [30.80]	.157 [4.00]	1.331 [33.80]	.748 [19.00]	.197 [5.00]	.780 [19.80]	.260 [6.60]	.843 [21.40]	***.134 [3.40]***	***.717 [18.20]***	***.071 [1.80]***	***.654 [16.60]***
20	1.157 [29.40]	1.496 [38.00]	.126 [3.20]	M4	8-32UNC	1.346 [34.20]	.157 [4.00]	1.331 [33.80]	.748 [19.00]	.197 [5.00]	.780 [19.80]	.260 [6.60]	.843 [21.40]	***.134 [3.40]***	***.717 [18.20]***	***.071 [1.80]***	***.654 [16.60]***
22	1.252 [31.80]	1.614 [41.00]	.126 [3.20]	M4	8-32UNC	1.472 [37.40]	.157 [4.00]	1.331 [33.80]	.748 [19.00]	.197 [5.00]	.780 [19.80]	.260 [6.60]	.843 [21.40]	***.134 [3.40]***	***.717 [18.20]***	***.071 [1.80]***	***.654 [16.60]***
24	1.374 [34.90]	1.752 [44.50]	.146 [3.70]	M4	10-24UNC	1.610 [40.90]	.157 [4.00]	1.409 [35.80]	.811 [20.60]	.197 [5.00]	.795 [20.20]	.260 [6.60]	.858 [21.80]	***.134 [3.40]***	***.732 [18.60]***	***.071 [1.80]***	***.669 [17.00]***
28	1.563 [39.70]	2.000 [50.80]	.146 [3.70]	M5	10-24UNC	1.839 [46.70]	.157 [4.00]	1.409 [35.80]	.811 [20.60]	.197 [5.00]	.795 [20.20]	***.260 [6.60]***	***.858 [21.80]***	.134 [3.40]	.732 [18.60]	***.071 [1.80]***	***.669 [17.00]***
32	1.752 [44.50]	2.244 [57.00]	.169 [4.30]	M5	1/4-20UNC	2.102 [53.40]	.157 [4.00]	1.469 [37.30]	.874 [22.20]	***.197 [5.00]***	***.791 [20.10]***	***.260 [6.60]***	***.854 [21.70]***	.134 [3.40]	.728 [18.50]	.071 [1.80]	.665 [16.90]
36	1.937 [49.20]	2.500 [63.50]	.169 [4.30]	M5	1/4-20UNC	2.346 [59.60]	.157 [4.00]	1.469 [37.30]	.874 [22.20]	***.197 [5.00]***	***.791 [20.10]***	***.260 [6.60]***	***.854 [21.70]***	.134 [3.40]	.728 [18.50]	.071 [1.80]	.665 [16.90]
40	2.185 [55.50]	2.752 [69.90]	.169 [4.30]	M5	1/4-20UNC	2.579 [65.50]	.157 [4.00]	1.469 [37.30]	.874 [22.20]	***.197 [5.00]***	***.791 [20.10]***	***.260 [6.60]***	***.854 [21.70]***	.134 [3.40]	.728 [18.50]	.071 [1.80]	.665 [16.90]

Dimensions are in Inches [mm]
* ±.020

CONSULT FACTORY

SPACECRAFT COMPONENTS CORP.
3040 Clayton Street
North Las Vegas, NV 89032
Phone: 702.851.7600
Fax: 702.851.7620
Email: salesinfo@spacecraft.com
Web: www.spacecraft.com

WALL MOUNT RECEPTACLE

020A*/G020A*/020R*/G020R*

MOUNTING HOLE OPTIONS

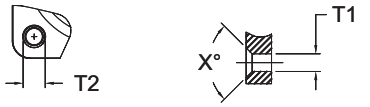

THREADED COUNTERSINK

MOUNTING HOLE CODES

CODE	MOUNTING HOLE TYPE
None	Thru holes
FF	Metric thread
UN	UNC thread
FS	Thru holes W/ Metric C'Sink (X=90°)
FSM	Thru holes W/ UN C'Sink (X=82°)

FRONT VIEW SIDE VIEW

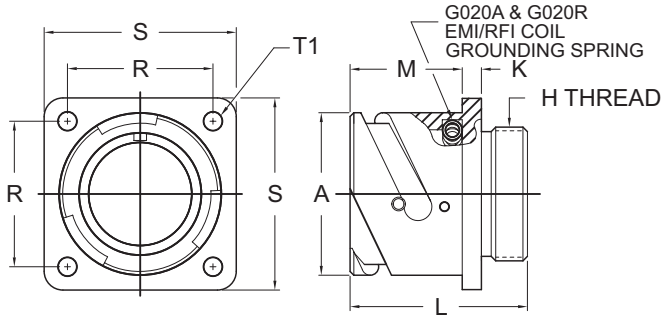

SCPB020A* **Non-environmental, no grommet**
SCPBG020A* **Non-environmental, with EMI/RFI ground spring**
SCPB020R* **Environmental, no grommet**
SCPBG020R* **With EMI/RFI ground spring**

SHELL SIZE	FRONT VIEW					SIDE VIEW				
	R ±.004 [±0.1]	S ±.012 [±0.3]	T1 +.004 [+0.1] -.000 [-0.0]	T2 THREAD METRIC	T2 THREAD UNC	A +.000 [+0.00] -.006 [-0.15]	H THREAD CLASS 2A	K ±.008 [±0.2]	L ±.012 [±0.3]	M +.016 [+0.4] -.000 [-0.0]
10SL	.717 [18.20]	1.000 [25.40]	.126 [3.20]	M4	8-32UNC	.717 [18.20]	5/8-24 UNEF	.110 [2.80]	1.087 [27.60]	.559 [14.20]
14S	.906 [23.00]	1.181 [30.00]	.126 [3.20]	M4	8-32UNC	.969 [24.60]	3/4-20 UNEF	.126 [3.20]	1.087 [27.60]	.559 [14.20]
16S	.969 [24.60]	1.280 [32.50]	.126 [3.20]	M4	8-32UNC	1.079 [27.40]	7/8-20 UNEF	.126 [3.20]	1.087 [27.60]	.559 [14.20]
16	.969 [24.60]	1.280 [32.50]	.126 [3.20]	M4	8-32UNC	1.079 [27.40]	7/8-20 UNEF	.126 [3.20]	1.331 [33.80]	.748 [19.00]
18	1.063 [27.00]	1.378 [35.00]	.126 [3.20]	M4	8-32UNC	1.213 [30.80]	1-20 UNEF	.157 [4.00]	1.331 [33.80]	.748 [19.00]
20	1.157 [29.40]	1.496 [38.00]	.126 [3.20]	M4	8-32UNC	1.346 [34.20]	1 1/8-18 UNEF	.157 [4.00]	1.331 [33.80]	.748 [19.00]
22	1.252 [31.80]	1.614 [41.00]	.126 [3.20]	M4	8-32UNC	1.472 [37.40]	1 1/4-18 UNEF	.157 [4.00]	1.331 [33.80]	.748 [19.00]
24	1.374 [34.90]	1.752 [44.50]	.146 [3.70]	M4	10-24UNC	1.610 [40.90]	1 3/8-18 UNEF	.157 [4.00]	1.409 [35.80]	.811 [20.60]
28	1.563 [39.70]	2.000 [50.80]	.146 [3.70]	M5	10-24UNC	1.839 [46.70]	1 5/8-18 UNEF	.157 [4.00]	1.409 [35.80]	.811 [20.60]
32	1.752 [44.50]	2.244 [57.00]	.169 [4.30]	M5	1/4-20UNC	2.102 [53.40]	1 7/8-16 UN	.157 [4.00]	1.469 [37.30]	.874 [22.20]
36	1.937 [49.20]	2.500 [63.50]	.169 [4.30]	M5	1/4-20UNC	2.346 [59.60]	2 1/16-16 UN	.157 [4.00]	1.469 [37.30]	.874 [22.20]
40	2.185 [55.50]	2.752 [69.90]	.169 [4.30]	M5	1/4-20UNC	2.579 [65.50]	2 5/16-16 UNS	.157 [4.00]	1.469 [37.30]	.874 [22.20]

Dimensions are in Inches [mm]

020FR*

FRONT VIEW

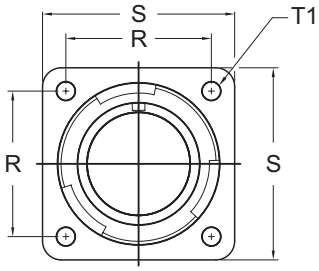

SCPB020FR* **Environmental, no grommet**
EXAMPLE PART NUMBER: SCPB020FR24-28P

SHELL SIZE	FRONT VIEW			SIDE VIEW				
	R ±.004 [±0.1]	S ±.012 [±0.3]	T1 +.004 [+0.1] -.000 [-0.0]	A +.000 [+0.00] -.006 [-0.15]	H THREAD CLASS 2A	K ±.008 [±0.2]	L ±.012 [±0.3]	M +.016 [+0.4] -.000 [-0.0]
10SL	.717 [18.20]	1.000 [25.40]	.126 [3.20]	.717 [18.20]	5/8-24 UNEF	.110 [2.80]	1.087 [27.60]	.559 [14.20]
14S	.906 [23.00]	1.181 [30.00]	.126 [3.20]	.969 [24.60]	3/4-20 UNEF	.126 [3.20]	1.087 [27.60]	.559 [14.20]
16S	.969 [24.60]	1.280 [32.50]	.126 [3.20]	1.079 [27.40]	7/8-20 UNEF	.126 [3.20]	1.087 [27.60]	.559 [14.20]
16	.969 [24.60]	1.280 [32.50]	.126 [3.20]	1.079 [27.40]	7/8-20 UNEF	.126 [3.20]	1.331 [33.80]	.748 [19.00]
18	1.063 [27.00]	1.378 [35.00]	.126 [3.20]	1.213 [30.80]	1-20 UNEF	.157 [4.00]	1.331 [33.80]	.748 [19.00]
20	1.157 [29.40]	1.496 [38.00]	.126 [3.20]	1.346 [34.20]	1 1/8-18 UNEF	.157 [4.00]	1.331 [33.80]	.748 [19.00]
22	1.252 [31.80]	1.614 [41.00]	.126 [3.20]	1.472 [37.40]	1 1/4-18 UNEF	.157 [4.00]	1.331 [33.80]	.748 [19.00]
24	1.374 [34.90]	1.752 [44.50]	.146 [3.70]	1.610 [40.90]	1 3/8-18 UNEF	.157 [4.00]	1.409 [35.80]	.811 [20.60]
28	1.563 [39.70]	2.000 [50.80]	.146 [3.70]	1.839 [46.70]	1 5/8-18 UNEF	.157 [4.00]	1.409 [35.80]	.811 [20.60]
32	1.752 [44.50]	2.244 [57.00]	.169 [4.30]	2.102 [53.40]	1 7/8-16 UN	.157 [4.00]	1.469 [37.30]	.874 [22.20]
36	1.937 [49.20]	2.500 [63.50]	.169 [4.30]	2.346 [59.60]	2 1/16-16 UN	.157 [4.00]	1.469 [37.30]	.874 [22.20]
40	2.185 [55.50]	2.752 [69.90]	.169 [4.30]	2.579 [65.50]	2 5/16-16 UNS	.157 [4.00]	1.469 [37.30]	.874 [22.20]

Dimensions are in Inches [mm]

SIDE VIEW

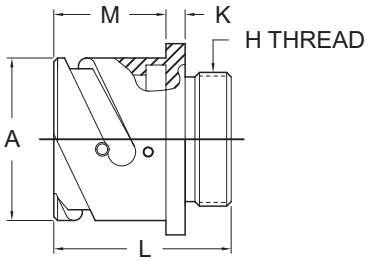

FINISH: BLACK ANODIZE
CONTACTS: F80 SILVER PLATED CRIMP CONTACTS

WALL MOUNT RECEPTACLE

020YM*/G020YM*

MOUNTING HOLE OPTIONS

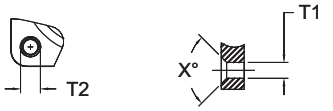

THREADED COUNTERSINK

MOUNTING HOLE CODES

CODE	MOUNTING HOLE TYPE
None	Thru holes
FF	Metric thread
UN	UNC thread
FS	Thru holes W/ Metric C'Sink (X=90°)
FSM	Thru holes W/ UN C'Sink (X=82°)

FRONT VIEW SIDE VIEW

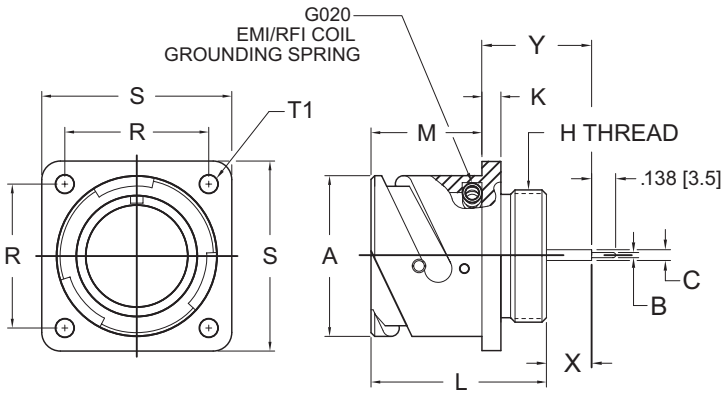

AVAILABLE CONTACT	B +0.00 [+0.00] -.002 [-0.05]	C +0.00 [+0.00] -0.10 [-.004]
SIZE 16S & 16	0.030 [0.75]	0.063 [1.6]
SIZE 12	0.071 [1.8]	0.134 [3.4]

Connectors are available only with contact sizes 16S, 16 and 12. For different contact sizes please consult factory.

SCPB020YM* **Environmental with PC tail contacts**
SCPBG020YM* **Environmental with PC tail contacts & ground spring**

SHELL SIZE	FRONT VIEW R ±.004 [±0.1]	S ±.012 [±0.3]	T1 +.004 [+0.1] -.000 [-0.0]	T2 THREAD METRIC	T2 THREAD UNC	SIDE VIEW A +.000 [+0.00] -.006 [-0.15]	K ±.008 [±0.2]	L ±.012 [±0.3]	M +.016 [+0.4] -.000 [-0.0]	H THREAD CLASS 2A	TYPE YM X*	TYPE YM Y*	TYPE YM1 X*	TYPE YM1 Y*	TYPE YM2 X*	TYPE YM2 Y*	TYPE YM3 X*	TYPE YM3 Y*
10SL	.717 [18.20]	1.000 [25.40]	.126 [3.20]	M4	8-32UNC	.717 [18.20]	.110 [2.80]	1.087 [27.60]	.559 [14.20]	5/8-24UNEF	***.197 [5.00]***	***.724 [18.40]***	***.260 [6.60]***	***.787 [20.00]***	***.134 [3.40]***	***.661 [16.80]***	***.071 [1.80]***	***.598 [15.20]***
14S	.906 [23.00]	1.181 [30.00]	.126 [3.20]	M4	8-32UNC	.969 [24.60]	.126 [3.20]	1.087 [27.60]	.559 [14.20]	3/4-20UNEF	***.197 [5.00]***	***.724 [18.40]***	***.260 [6.60]***	***.787 [20.00]***	***.134 [3.40]***	***.661 [16.80]***	***.071 [1.80]***	***.598 [15.20]***
16S	.969 [24.60]	1.280 [32.50]	.126 [3.20]	M4	8-32UNC	1.079 [27.40]	.126 [3.20]	1.087 [27.60]	.559 [14.20]	7/8-20UNEF	***.197 [5.00]***	***.724 [18.40]***	***.260 [6.60]***	***.787 [20.00]***	***.134 [3.40]***	***.661 [16.80]***	***.071 [1.80]***	***.598 [15.20]***
16	.969 [24.60]	1.280 [32.50]	.126 [3.20]	M4	8-32UNC	1.079 [27.40]	.126 [3.20]	1.331 [33.80]	.748 [19.00]	7/8-20UNEF	.197 [5.00]	.780 [19.80]	.260 [6.60]	.843 [21.40]	***.134 [3.40]***	***.717 [18.20]***	***.071 [1.80]***	***.654 [16.60]***
18	1.063 [27.00]	1.378 [35.00]	.126 [3.20]	M4	8-32UNC	1.213 [30.80]	.157 [4.00]	1.331 [33.80]	.748 [19.00]	1-20UNEF	.197 [5.00]	.780 [19.80]	.260 [6.60]	.843 [21.40]	***.134 [3.40]***	***.717 [18.20]***	***.071 [1.80]***	***.654 [16.60]***
20	1.157 [29.40]	1.496 [38.00]	.126 [3.20]	M4	8-32UNC	1.346 [34.20]	.157 [4.00]	1.331 [33.80]	.748 [19.00]	1 1/8-18UNEF	.197 [5.00]	.780 [19.80]	.260 [6.60]	.843 [21.40]	***.134 [3.40]***	***.717 [18.20]***	***.071 [1.80]***	***.654 [16.60]***
22	1.252 [31.80]	1.614 [41.00]	.126 [3.20]	M4	8-32UNC	1.472 [37.40]	.157 [4.00]	1.331 [33.80]	.748 [19.00]	1 1/4-18UNEF	.197 [5.00]	.780 [19.80]	.260 [6.60]	.843 [21.40]	***.134 [3.40]***	***.717 [18.20]***	***.071 [1.80]***	***.654 [16.60]***
24	1.374 [34.90]	1.752 [44.50]	.146 [3.70]	M4	10-24UNC	1.610 [40.90]	.157 [4.00]	1.409 [35.80]	.811 [20.60]	1 3/8-18UNEF	.197 [5.00]	.795 [20.20]	.260 [6.60]	.858 [21.80]	***.134 [3.40]***	***.732 [18.60]***	***.071 [1.80]***	***.669 [17.00]***
28	1.563 [39.70]	2.000 [50.80]	.146 [3.70]	M5	10-24UNC	1.839 [46.70]	.157 [4.00]	1.409 [35.80]	.811 [20.60]	1 5/8-18UNEF	.197 [5.00]	.795 [20.20]	***.260 [6.60]***	***.858 [21.80]***	.134 [3.40]	.732 [18.60]	***.071 [1.80]***	***.669 [17.00]***
32	1.752 [44.50]	2.244 [57.00]	.169 [4.30]	M5	1/4-20UNC	2.102 [53.40]	.157 [4.00]	1.469 [37.30]	.874 [22.20]	1 7/8-16UN	***.197 [5.00]***	***.791 [20.10]***	***.260 [6.60]***	***.854 [21.70]***	.134 [3.40]	.728 [18.50]	.071 [1.80]	.665 [16.90]
36	1.937 [49.20]	2.500 [63.50]	.169 [4.30]	M5	1/4-20UNC	2.346 [59.60]	.157 [4.00]	1.469 [37.30]	.874 [22.20]	2 1/16-16UN	***.197 [5.00]***	***.791 [20.10]***	***.260 [6.60]***	***.854 [21.70]***	.134 [3.40]	.728 [18.50]	.071 [1.80]	.665 [16.90]
40	2.185 [55.50]	2.752 [69.90]	.169 [4.30]	M5	1/4-20UNC	2.579 [65.50]	.157 [4.00]	1.469 [37.30]	.874 [22.20]	2 5/16-16UNS	***.197 [5.00]***	***.791 [20.10]***	***.260 [6.60]***	***.854 [21.70]***	.134 [3.40]	.728 [18.50]	.071 [1.80]	.665 [16.90]

Dimensions are in Inches [mm]
* ±.020

CONSULT FACTORY

BOX MOUNT RECEPTACLE, REAR PANEL MOUNT

03A*/03R*

MOUNTING HOLE OPTION

THREADED

MOUNTING HOLE CODES

CODE	MOUNTING HOLE TYPE
FP	Thru holes
None	Metric thread - Standard
UN	UNC thread

FRONT VIEW

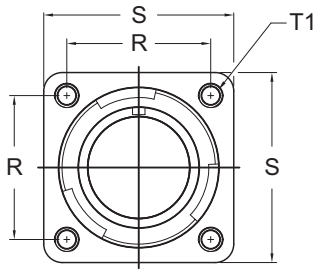

SIDE VIEW

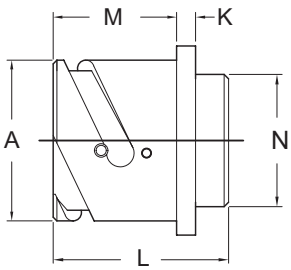

SCPB03A* **Non-environmental**
SCPB03R* **Environmental when used with sealing gasket**

SHELL SIZE	FRONT VIEW R ±.004 [±0.1]	S ±.012 [±0.3]	T1 +.004 [+0.1] -.000 [-0.0] STYLE 03RFP	T2 THREAD METRIC	T2 THREAD UNC	SIDE VIEW A +.000 [+0.00] -.006 [-0.15]	K ±.008 [±0.2]	L ±.012 [±0.3]	M +.016 [+0.4] -.000 [-0.0]	N MAX
10SL	.717 [18.20]	1.000 [25.40]	.126 [3.20]	M4	8-32UNC	.717 [18.20]	.110 [2.80]	1.087 [27.60]	.717 [18.20]	.638 [16.20]
14S	.906 [23.00]	1.181 [30.00]	.126 [3.20]	M4	8-32UNC	.969 [24.60]	.126 [3.20]	1.087 [27.60]	.717 [18.20]	.756 [19.20]
16S	.969 [24.60]	1.280 [32.50]	.126 [3.20]	M4	8-32UNC	1.079 [27.40]	.126 [3.20]	1.087 [27.60]	.717 [18.20]	.882 [22.40]
16	.969 [24.60]	1.280 [32.50]	.126 [3.20]	M4	8-32UNC	1.079 [27.40]	.126 [3.20]	1.331 [33.80]	.907 [23.05]	.882 [22.40]
18	1.063 [27.00]	1.378 [35.00]	.126 [3.20]	M4	8-32UNC	1.213 [30.80]	.157 [4.00]	1.358 [34.50]	.907 [23.05]	1.008 [25.60]
20	1.157 [29.40]	1.496 [38.00]	.126 [3.20]	M4	8-32UNC	1.346 [34.20]	.157 [4.00]	1.358 [34.50]	.907 [23.05]	1.142 [29.00]
22	1.252 [31.80]	1.614 [41.00]	.126 [3.20]	M4	8-32UNC	1.472 [37.40]	.157 [4.00]	1.358 [34.50]	.907 [23.05]	1.268 [32.20]
24	1.374 [34.90]	1.752 [44.50]	.146 [3.70]	M4	10-24UNC	1.610 [40.90]	.157 [4.00]	1.409 [35.80]	.907 [23.05]	1.390 [35.30]
28	1.563 [39.70]	2.000 [50.80]	.146 [3.70]	M5	10-24UNC	1.839 [46.70]	.157 [4.00]	1.409 [35.80]	.947 [24.05]	1.630 [41.40]
32	1.752 [44.50]	2.244 [57.00]	.169 [4.30]	M5	1/4-20UNC	2.102 [53.40]	.157 [4.00]	1.469 [37.30]	.947 [24.05]	1.882 [47.80]
36	1.937 [49.20]	2.500 [63.50]	.169 [4.30]	M5	1/4-20UNC	2.346 [59.60]	.157 [4.00]	1.469 [37.30]	.947 [24.05]	2.130 [54.10]
40	2.185 [55.50]	2.748 [69.80]	.169 [4.30]	M5	1/4-20UNC	2.579 [65.50]	.157 [4.00]	1.469 [37.30]	.947 [24.05]	2.323 [59.00]

Dimensions are in Inches [mm]

SPACECRAFT COMPONENTS CORP.
3040 Clayton Street
North Las Vegas, NV 89032
Phone: 702.851.7600
Fax: 702.851.7620
Email: salesinfo@spacecraft.com
Web: www.spacecraft.com

BOX MOUNT RECEPTACLE, REAR PANEL MOUNT

03YM*

MOUNTING HOLE OPTION

THREADED

MOUNTING HOLE CODES

CODE	MOUNTING HOLE TYPE
FP	Thru holes
None	Metric thread - Standard
UN	UNC thread

FRONT VIEW

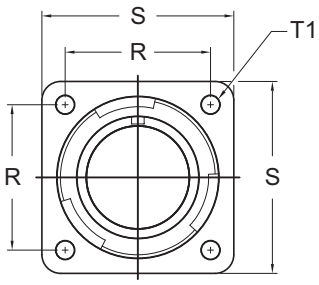

SIDE VIEW

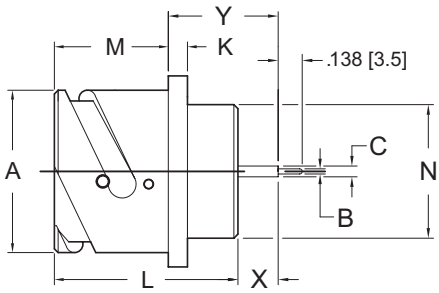

AVAILABLE CONTACT	B +0.00 [+0.00] -.002 [-0.05]	C +0.00 [+0.00] -0.10 [-.004]
SIZE 16S & 16	0.030 [0.75]	0.063 [1.6]
SIZE 12	0.071 [1.8]	0.134 [3.4]

Connectors are available only with contact sizes 16S, 16 and 12. For different contact sizes please consult factory.

SCPB03YM* Environmental when used with sealing gasket

SHELL SIZE	FRONT VIEW					SIDE VIEW												
	R ±.004 [±0.1]	S ±.012 [±0.3]	T1 +.004 [+0.1] -.000 [-0.0]	T2 THREAD		A +.000 [+0.00] -.006 [-0.15]	K ±.008 [±0.2]	L ±.012 [±0.3]	M +.016 [+0.4] -.000 [-0.0]	N MAX	TYPE YM		TYPE YM1		TYPE YM2		TYPE YM3	
				METRIC	UNC						X*	Y*	X*	Y*	X*	Y*	X*	Y*
10SL	.717 [18.20]	1.000 [25.40]	.126 [3.20]	M4	8-32UNC	.717 [18.20]	.110 [2.80]	1.087 [27.60]	.717 [18.20]	.626 [15.90]	***.197 [5.00]***	***.567 [14.40]***	***.260 [6.60]***	***.630 [16.00]***	***.134 [3.40]***	***.504 [12.80]***	***.071 [1.80]***	***.441 [11.20]***
14S	.906 [23.00]	1.181 [30.00]	.126 [3.20]	M4	8-32UNC	.969 [24.60]	.126 [3.20]	1.087 [27.60]	.717 [18.20]	.756 [19.20]	***.197 [5.00]***	***.567 [14.40]***	***.260 [6.60]***	***.630 [16.00]***	***.134 [3.40]***	***.504 [12.80]***	***.071 [1.80]***	***.441 [11.20]***
16S	.969 [24.60]	1.280 [32.50]	.126 [3.20]	M4	8-32UNC	1.079 [27.40]	.126 [3.20]	1.087 [27.60]	.717 [18.20]	.882 [22.40]	***.197 [5.00]***	***.567 [14.40]***	***.260 [6.60]***	***.630 [16.00]***	***.134 [3.40]***	***.504 [12.80]***	***.071 [1.80]***	***.441 [11.20]***
16	.969 [24.60]	1.280 [32.50]	.126 [3.20]	M4	8-32UNC	1.079 [27.40]	.126 [3.20]	1.331 [33.80]	.907 [23.05]	.882 [22.40]	.197 [5.00]	.622 [15.80]	.260 [6.60]	.685 [17.40]	***.134 [3.40]***	***.559 [14.20]***	***.071 [1.80]***	***.496 [12.60]***
18	1.063 [27.00]	1.378 [35.00]	.126 [3.20]	M4	8-32UNC	1.213 [30.80]	.157 [4.00]	1.331 [33.80]	.907 [23.05]	1.008 [25.60]	.197 [5.00]	.622 [15.80]	.260 [6.60]	.685 [17.40]	***.134 [3.40]***	***.559 [14.20]***	***.071 [1.80]***	***.496 [12.60]***
20	1.157 [29.40]	1.496 [38.00]	.126 [3.20]	M4	8-32UNC	1.346 [34.20]	.157 [4.00]	1.331 [33.80]	.907 [23.05]	1.142 [29.00]	.197 [5.00]	.622 [15.80]	.260 [6.60]	.685 [17.40]	***.134 [3.40]***	***.559 [14.20]***	***.071 [1.80]***	***.496 [12.60]***
22	1.252 [31.80]	1.614 [41.00]	.126 [3.20]	M4	8-32UNC	1.472 [37.40]	.157 [4.00]	1.331 [33.80]	.907 [23.05]	1.268 [32.20]	.197 [5.00]	.622 [15.80]	.260 [6.60]	.685 [17.40]	***.134 [3.40]***	***.559 [14.20]***	***.071 [1.80]***	***.496 [12.60]***
24	1.374 [34.90]	1.752 [44.50]	.146 [3.70]	M4	10-24UNC	1.610 [40.90]	.157 [4.00]	1.409 [35.80]	.907 [23.05]	1.390 [35.30]	.197 [5.00]	.701 [17.80]	.260 [6.60]	.764 [19.40]	***.134 [3.40]***	***.638 [16.20]***	***.071 [1.80]***	***.575 [14.60]***
28	1.563 [39.70]	2.000 [50.80]	.146 [3.70]	M5	10-24UNC	1.839 [46.70]	.157 [4.00]	1.409 [35.80]	.947 [24.05]	1.630 [41.40]	.197 [5.00]	.657 [16.70]	***.260 [6.60]***	***.720 [18.30]***	.134 [3.40]	.594 [15.10]	***.071 [1.80]***	***.531 [13.50]***
32	1.752 [44.50]	2.244 [57.00]	.169 [4.30]	M5	1/4-20UNC	2.102 [53.40]	.157 [4.00]	1.469 [37.30]	.947 [24.05]	1.882 [47.80]	***.197 [5.00]***	***.720 [18.30]***	***.260 [6.60]***	***.783 [19.90]***	.134 [3.40]	.657 [16.70]	.071 [1.80]	.594 [15.10]
36	1.937 [49.20]	2.500 [63.50]	.169 [4.30]	M5	1/4-20UNC	2.346 [59.60]	.157 [4.00]	1.469 [37.30]	.947 [24.05]	2.130 [54.10]	***.197 [5.00]***	***.720 [18.30]***	***.260 [6.60]***	***.783 [19.90]***	.134 [3.40]	.657 [16.70]	.071 [1.80]	.594 [15.10]
40	2.185 [55.50]	2.752 [69.90]	.169 [4.30]	M5	1/4-20UNC	2.579 [65.50]	.157 [4.00]	1.469 [37.30]	.947 [24.05]	2.323 [59.00]	***.197 [5.00]***	***.720 [18.30]***	***.260 [6.60]***	***.783 [19.90]***	.134 [3.40]	.657 [16.70]	.071 [1.80]	.594 [15.10]

Dimensions are in Inches [mm]
* ±.020

CONSULT FACTORY

WALL MOUNT RECEPTACLE, REAR PANEL MOUNT

030–*

MOUNTING HOLE OPTION

THREADED

MOUNTING HOLE CODES

CODE	MOUNTING HOLE TYPE
FP	Thru holes
None	Metric thread - Standard
UN	UNC thread

FRONT VIEW

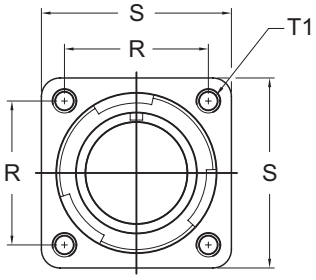

SIDE VIEW

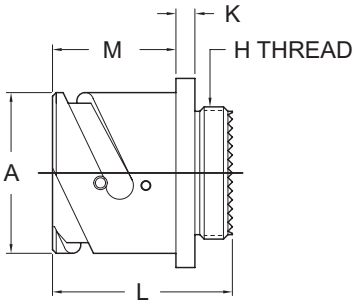

SCPB030-* Non-Environmental

SHELL SIZE	FRONT VIEW					SIDE VIEW				
	R ±.004 [±0.1]	S ±.012 [±0.3]	T1 +.004 [+0.1] -.000 [-0.0] STYLE FP	T2 THREAD		A +.000 [+0.00] -.006 [-0.15]	H THREAD CLASS 2A	K ±.008 [±0.2]	L ±.012 [±0.3]	M +.016 [+0.4] -.000 [-0.0]
				METRIC	UNC					
10SL	.717 [18.20]	1.000 [25.40]	.126 [3.20]	M4	8-32UNC	.717 [18.20]	5/8-24 UNEF	.110 [2.80]	1.087 [27.60]	.717 [18.20]
14S	.906 [23.00]	1.181 [30.00]	.126 [3.20]	M4	8-32UNC	.969 [24.60]	3/4-20 UNEF	.126 [3.20]	1.087 [27.60]	.717 [18.20]
16S	.969 [24.60]	1.280 [32.50]	.126 [3.20]	M4	8-32UNC	1.079 [27.40]	7/8-20 UNEF	.126 [3.20]	1.087 [27.60]	.717 [18.20]
16	.969 [24.60]	1.280 [32.50]	.126 [3.20]	M4	8-32UNC	1.079 [27.40]	7/8-20 UNEF	.126 [3.20]	1.331 [33.80]	.907 [23.05]
18	1.063 [27.00]	1.378 [35.00]	.126 [3.20]	M4	8-32UNC	1.213 [30.80]	1-20 UNEF	.157 [4.00]	1.331 [33.80]	.907 [23.05]
20	1.157 [29.40]	1.496 [38.00]	.126 [3.20]	M4	8-32UNC	1.346 [34.20]	1 1/8-18 UNEF	.157 [4.00]	1.331 [33.80]	.907 [23.05]
22	1.252 [31.80]	1.614 [41.00]	.126 [3.20]	M4	8-32UNC	1.472 [37.40]	1 1/4-18 UNEF	.157 [4.00]	1.331 [33.80]	.907 [23.05]
24	1.374 [34.90]	1.752 [44.50]	.146 [3.70]	M4	10-24UNC	1.610 [40.90]	1 3/8-18 UNEF	.157 [4.00]	1.409 [35.80]	.907 [23.05]
28	1.563 [39.70]	2.000 [50.80]	.146 [3.70]	M5	10-24UNC	1.839 [46.70]	1 5/8-18 UNEF	.157 [4.00]	1.409 [35.80]	.947 [24.05]
32	1.752 [44.50]	2.244 [57.00]	.169 [4.30]	M5	1/4-20UNC	2.102 [53.40]	1 7/8-16 UN	.157 [4.00]	1.469 [37.30]	.947 [24.05]
36	1.937 [49.20]	2.500 [63.50]	.169 [4.30]	M5	1/4-20UNC	2.346 [59.60]	2 1/16-16 UN	.157 [4.00]	1.469 [37.30]	.947 [24.05]
40	2.185 [55.50]	2.752 [69.90]	.169 [4.30]	M5	1/4-20UNC	2.579 [65.50]	2 5/16-16 UNS	.157 [4.00]	1.469 [37.30]	.947 [24.05]

Dimensions are in Inches [mm]

WALL MOUNT RECEPTACLE, REAR PANEL MOUNT

030A*/030R*

MOUNTING HOLE OPTION

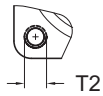

THREADED

MOUNTING HOLE CODES

CODE	MOUNTING HOLE TYPE
FP	Thru holes
None	Metric thread - Standard
UN	UNC thread

FRONT VIEW

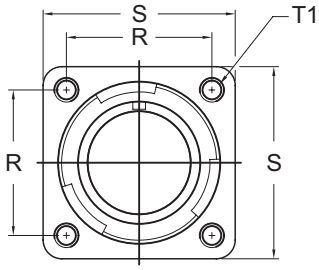

SIDE VIEW

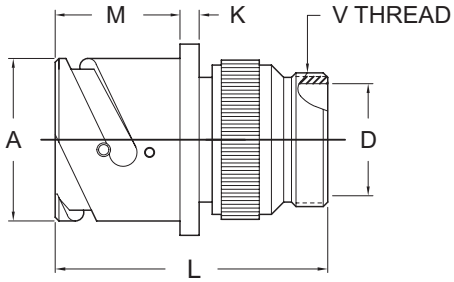

SCPB030A* **Non-Environmental, no grommet**
SCPB030R* **Environmental with grommet**

SHELL SIZE	FRONT VIEW					SIDE VIEW					
	R ±.004 [±0.1]	S ±.012 [±0.3]	T1 +.004 [+0.1] -.000 [-0.0] STYLE FP	T2 THREAD METRIC	T2 THREAD UNC	A +.000 [+0.00] -.006 [-0.15]	D MIN.	K ±.008 [±0.2]	L MAX	M +.016 [+0.4] -.000 [-0.0]	V THREAD CLASS 2A
10SL	.717 [18.20]	1.000 [25.40]	.126 [3.20]	M4	8-32UNC	.717 [18.20]	.323 [8.20]	.110 [2.80]	1.811 [46.00]	.717 [18.20]	5/8-24 UNEF
14S	.906 [23.00]	1.181 [30.00]	.126 [3.20]	M4	8-32UNC	.969 [24.60]	.437 [11.10]	.126 [3.20]	1.969 [50.00]	.717 [18.20]	3/4-20 UNEF
16S	.969 [24.60]	1.280 [32.50]	.126 [3.20]	M4	8-32UNC	1.079 [27.40]	.563 [14.30]	.126 [3.20]	1.969 [50.00]	.717 [18.20]	7/8-20 UNEF
16	.969 [24.60]	1.280 [32.50]	.126 [3.20]	M4	8-32UNC	1.079 [27.40]	.563 [14.30]	.126 [3.20]	2.283 [58.00]	.907 [23.05]	7/8-20 UNEF
18	1.063 [27.00]	1.378 [35.00]	.126 [3.20]	M4	8-32UNC	1.213 [30.80]	.657 [16.70]	.157 [4.00]	2.283 [58.00]	.907 [23.05]	1-20 UNEF
20	1.157 [29.40]	1.496 [38.00]	.126 [3.20]	M4	8-32UNC	1.346 [34.20]	.780 [19.80]	.157 [4.00]	2.283 [58.00]	.907 [23.05]	1 3/16-18 UNEF
22	1.252 [31.80]	1.614 [41.00]	.126 [3.20]	M4	8-32UNC	1.472 [37.40]	.780 [19.80]	.157 [4.00]	2.323 [59.00]	.907 [23.05]	1 3/16-18 UNEF
24	1.374 [34.90]	1.752 [44.50]	.146 [3.70]	M4	10-24UNC	1.610 [40.90]	1.000 [25.40]	.157 [4.00]	2.323 [59.00]	.907 [23.05]	1 7/16-18 UNEF
28	1.563 [39.70]	2.000 [50.80]	.146 [3.70]	M5	10-24UNC	1.839 [46.70]	1.063 [27.00]	.157 [4.00]	2.638 [67.00]	.947 [24.05]	1 7/16-18 UNEF
32	1.752 [44.50]	2.244 [57.00]	.169 [4.30]	M5	1/4-20UNC	2.102 [53.40]	1.280 [32.50]	.157 [4.00]	2.795 [71.00]	.947 [24.05]	1 3/4-18 UNS
36	1.937 [49.20]	2.500 [63.50]	.169 [4.30]	M5	1/4-20UNC	2.346 [59.60]	1.406 [35.70]	.157 [4.00]	2.835 [72.00]	.947 [24.05]	2-18 UNS
40	2.185 [55.50]	2.752 [69.90]	.169 [4.30]	M5	1/4-20UNC	2.579 [65.50]	1.772 [45.00]	.157 [4.00]	3.386 [86.00]	.947 [24.05]	2 1/4-16 UN

Dimensions are in Inches [mm]

030AE*/030E*

MOUNTING HOLE OPTION

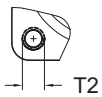

THREADED

MOUNTING HOLE CODES

CODE	MOUNTING HOLE TYPE
FP	Thru holes
None	Metric thread - Standard
UN	UNC thread

FRONT VIEW

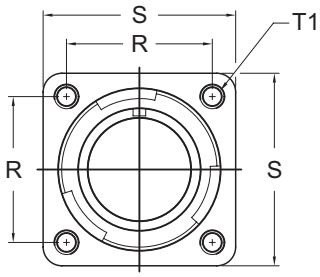

SIDE VIEW

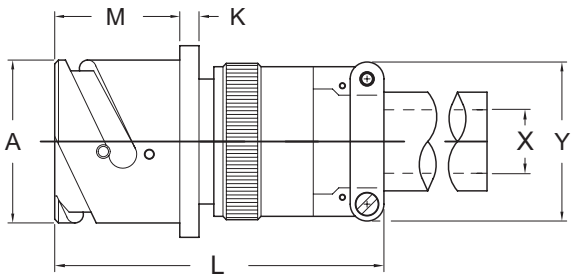

SCPB030AE* **Non-environmental, no grommet**
SCPB030E* **Environmental with grommet**

SHELL SIZE	FRONT VIEW					SIDE VIEW					
	R ±.004 [±0.1]	S ±.012 [±0.3]	T1 +.004 [+0.1] -.000 [-0.0] STYLE FP	T2 THREAD METRIC	T2 THREAD UNC	A +.000 [+0.00] -.006 [-0.15]	K ±.008 [±0.2]	L MAX	M +.016 [+0.4] -.000 [-0.0]	X MIN	Y MAX
10SL	.717 [18.20]	1.000 [25.40]	.126 [3.20]	M4	8-32UNC	.717 [18.20]	.110 [2.80]	2.638 [67.00]	.717 [18.20]	.256 [6.50]	.894 [22.70]
14S	.906 [23.00]	1.181 [30.00]	.126 [3.20]	M4	8-32UNC	.969 [24.60]	.126 [3.20]	2.835 [72.00]	.717 [18.20]	.354 [9.00]	1.083 [27.50]
16S	.969 [24.60]	1.280 [32.50]	.126 [3.20]	M4	8-32UNC	1.079 [27.40]	.126 [3.20]	2.953 [75.00]	.717 [18.20]	.433 [11.00]	1.181 [30.00]
16	.969 [24.60]	1.280 [32.50]	.126 [3.20]	M4	8-32UNC	1.079 [27.40]	.126 [3.20]	3.228 [82.00]	.907 [23.05]	.433 [11.00]	1.181 [30.00]
18	1.063 [27.00]	1.378 [35.00]	.126 [3.20]	M4	8-32UNC	1.213 [30.80]	.157 [4.00]	3.228 [82.00]	.907 [23.05]	.559 [14.20]	1.268 [32.20]
20	1.157 [29.40]	1.496 [38.00]	.126 [3.20]	M4	8-32UNC	1.346 [34.20]	.157 [4.00]	3.228 [82.00]	.907 [23.05]	.622 [15.80]	1.476 [37.50]
22	1.252 [31.80]	1.614 [41.00]	.126 [3.20]	M4	8-32UNC	1.472 [37.40]	.157 [4.00]	3.268 [83.00]	.907 [23.05]	.622 [15.80]	1.476 [37.50]
24	1.374 [34.90]	1.752 [44.50]	.146 [3.70]	M4	10-24UNC	1.610 [40.90]	.157 [4.00]	3.346 [85.00]	.907 [23.05]	.843 [21.40]	1.705 [43.30]
28	1.563 [39.70]	2.000 [50.80]	.146 [3.70]	M5	10-24UNC	1.839 [46.70]	.157 [4.00]	3.661 [93.00]	.947 [24.05]	.843 [21.40]	1.705 [43.30]
32	1.752 [44.50]	2.244 [57.00]	.169 [4.30]	M5	1/4-20UNC	2.102 [53.40]	.157 [4.00]	3.898 [99.00]	.947 [24.05]	1.051 [26.70]	2.035 [51.70]
36	1.937 [49.20]	2.500 [63.50]	.169 [4.30]	M5	1/4-20UNC	2.346 [59.60]	.157 [4.00]	3.937 [100.00]	.947 [24.05]	1.248 [31.70]	2.283 [58.00]
40	2.185 [55.50]	2.752 [69.90]	.169 [4.30]	M5	1/4-20UNC	2.579 [65.50]	.157 [4.00]	5.039 [128.00]	.947 [24.05]	1.374 [34.90]	2.579 [65.50]

Dimensions are in Inches [mm]

SPACECRAFT COMPONENTS CORP.
3040 Clayton Street
North Las Vegas, NV 89032
Phone: 702.851.7600
Fax: 702.851.7620
Email: salesinfo@spacecraft.com
Web: www.spacecraft.com

WALL MOUNT RECEPTACLE, REAR PANEL MOUNT

030AF*/030F*

MOUNTING HOLE OPTION

THREADED

MOUNTING HOLE CODES

CODE	MOUNTING HOLE TYPE
FP	Thru holes
None	Metric thread - Standard
UN	UNC thread

FRONT VIEW

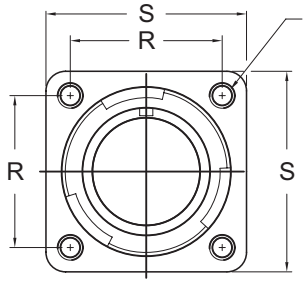

SIDE VIEW

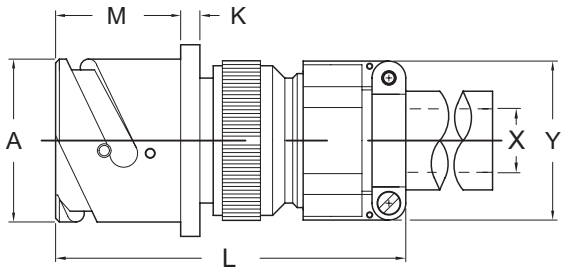

SCPB030AF* **Non-Environmental, no grommet**
SCPB030F* **Environmental with grommet**

SHELL SIZE	FRONT VIEW					SIDE VIEW					
	R ±.004 [±0.1]	S ±.012 [±0.3]	T1 +.004 [+0.1] -.000 [-0.0] STYLE FP	T2 THREAD METRIC	T2 THREAD UNC	A +.000 [+0.00] -.006 [-0.15]	K ±.008 [±0.2]	L MAX	M +.016 [+0.4] -.000 [-0.0]	X MIN	Y MAX
10SL	.717 [18.20]	1.000 [25.40]	.126 [3.20]	M4	8-32UNC	.717 [18.20]	.110 [2.80]	2.638 [67.0]	.717 [18.20]	.256 [6.50]	.894 [22.70]
14S	.906 [23.00]	1.181 [30.00]	.126 [3.20]	M4	8-32UNC	.969 [24.60]	.126 [3.20]	2.835 [72.0]	.717 [18.20]	.354 [9.00]	1.083 [27.50]
16S	.969 [24.60]	1.280 [32.50]	.126 [3.20]	M4	8-32UNC	1.079 [27.40]	.126 [3.20]	2.953 [75.0]	.717 [18.20]	.433 [11.00]	1.181 [30.00]
16	.969 [24.60]	1.280 [32.50]	.126 [3.20]	M4	8-32UNC	1.079 [27.40]	.126 [3.20]	3.228 [82.0]	.907 [23.05]	.433 [11.00]	1.181 [30.00]
18	1.063 [27.00]	1.378 [35.00]	.126 [3.20]	M4	8-32UNC	1.213 [30.80]	.157 [4.00]	3.228 [82.0]	.907 [23.05]	.559 [14.20]	1.268 [32.20]
20	1.157 [29.40]	1.496 [38.00]	.126 [3.20]	M4	8-32UNC	1.346 [34.20]	.157 [4.00]	3.228 [82.0]	.907 [23.05]	.622 [15.80]	1.476 [37.50]
22	1.252 [31.80]	1.614 [41.00]	.126 [3.20]	M4	8-32UNC	1.472 [37.40]	.157 [4.00]	3.268 [83.0]	.907 [23.05]	.622 [15.80]	1.476 [37.50]
24	1.374 [34.90]	1.752 [44.50]	.146 [3.70]	M4	10-24UNC	1.610 [40.90]	.157 [4.00]	3.346 [85.0]	.907 [23.05]	.843 [21.40]	1.705 [43.30]
28	1.563 [39.70]	2.000 [50.80]	.146 [3.70]	M5	10-24UNC	1.839 [46.70]	.157 [4.00]	3.661 [93.0]	.947 [24.05]	.843 [21.40]	1.705 [43.30]
32	1.752 [44.50]	2.244 [57.00]	.169 [4.30]	M5	1/4-20UNC	2.102 [53.40]	.157 [4.00]	3.898 [99.0]	.947 [24.05]	1.051 [26.70]	2.035 [51.70]
36	1.937 [49.20]	2.500 [63.50]	.169 [4.30]	M5	1/4-20UNC	2.346 [59.60]	.157 [4.00]	3.937 [100.0]	.947 [24.05]	1.248 [31.70]	2.283 [58.00]
40	2.185 [55.50]	2.752 [69.90]	.169 [4.30]	M5	1/4-20UNC	2.579 [65.50]	.157 [4.00]	5.039 [128.0]	.947 [24.05]	1.374 [34.90]	2.579 [65.50]

Dimensions are in Inches [mm]

030AG*/030G*

MOUNTING HOLE OPTION

THREADED

MOUNTING HOLE CODES

CODE	MOUNTING HOLE TYPE
FP	Thru holes
None	Metric thread - Standard
UN	UNC thread

FRONT VIEW

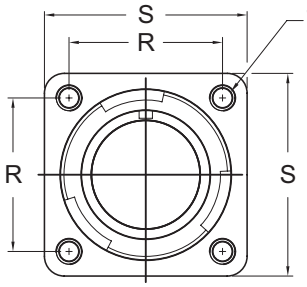

SIDE VIEW

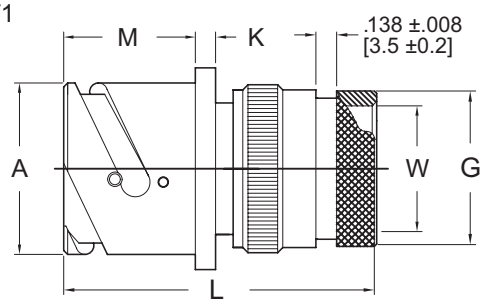

SCPB030AG* Environmental, no grommet
SCPB030G* Environmental with grommet

SHELL SIZE	FRONT VIEW					SIDE VIEW					
	R ±.004 [±0.1]	S ±.012 [±0.3]	T1 +.004 [+0.1] -.000 [-0.0] STYLE FP	T2 THREAD METRIC	T2 THREAD UNC	A +.000 [+0.00] -.006 [-0.15]	G ±.008 [±0.2]	K ±.008 [±0.2]	L MAX	M +.016 [+0.4] -.000 [-0.0]	W MIN
10SL	.717 [18.20]	1.000 [25.40]	.126 [3.20]	M4	8-32UNC	.717 [18.20]	.610 [15.50]	.110 [2.80]	1.969 [50.00]	.717 [18.20]	.335 [8.50]
14S	.906 [23.00]	1.181 [30.00]	.126 [3.20]	M4	8-32UNC	.969 [24.60]	.752 [19.10]	.126 [3.20]	1.969 [50.00]	.717 [18.20]	.472 [12.00]
16S	.969 [24.60]	1.280 [32.50]	.126 [3.20]	M4	8-32UNC	1.079 [27.40]	.941 [23.90]	.126 [3.20]	1.969 [50.00]	.717 [18.20]	.571 [14.50]
16	.969 [24.60]	1.280 [32.50]	.126 [3.20]	M4	8-32UNC	1.079 [27.40]	.941 [23.90]	.126 [3.20]	2.362 [60.00]	.907 [23.05]	.571 [14.50]
18	1.063 [27.00]	1.378 [35.00]	.126 [3.20]	M4	8-32UNC	1.213 [30.80]	.941 [23.90]	.157 [4.00]	2.362 [60.00]	.907 [23.05]	.689 [17.50]
20	1.157 [29.40]	1.496 [38.00]	.126 [3.20]	M4	8-32UNC	1.346 [34.20]	1.165 [29.60]	.157 [4.00]	2.559 [65.00]	.907 [23.05]	.768 [19.50]
22	1.252 [31.80]	1.614 [41.00]	.126 [3.20]	M4	8-32UNC	1.472 [37.40]	1.165 [29.60]	.157 [4.00]	2.559 [65.00]	.907 [23.05]	.866 [22.00]
24	1.374 [34.90]	1.752 [44.50]	.146 [3.70]	M4	10-24UNC	1.610 [40.90]	1.488 [37.80]	.157 [4.00]	2.559 [65.00]	.907 [23.05]	.984 [25.00]
28	1.563 [39.70]	2.000 [50.80]	.146 [3.70]	M5	10-24UNC	1.839 [46.70]	1.488 [37.80]	.157 [4.00]	2.559 [65.00]	.947 [24.05]	1.142 [29.00]
32	1.752 [44.50]	2.244 [57.00]	.169 [4.30]	M5	1/4-20UNC	2.102 [53.40]	1.882 [47.80]	.157 [4.00]	2.756 [70.00]	.947 [24.05]	1.339 [34.00]
36	1.937 [49.20]	2.500 [63.50]	.169 [4.30]	M5	1/4-20UNC	2.346 [59.60]	1.882 [47.80]	.157 [4.00]	2.953 [75.00]	.947 [24.05]	1.516 [38.50]
40	2.185 [55.50]	2.752 [69.90]	.169 [4.30]	M5	1/4-20UNC	2.579 [65.50]	2.063 [52.40]	.157 [4.00]	3.031 [77.00]	.947 [24.05]	1.890 [48.00]

Dimensions are in Inches [mm]

WALL MOUNT RECEPTACLE, REAR PANEL MOUNT

030AG2G*/030G2G*

MOUNTING HOLE OPTIONS

THREADED
MOUNTING HOLE CODES

CODE	MOUNTING HOLE TYPE
FP	Thru holes
None	Metric thread - Standard
UN	UNC thread

FRONT VIEW

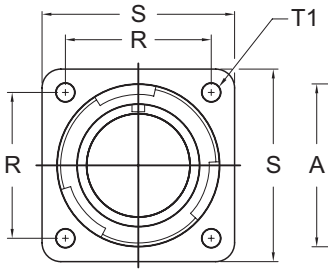

SIDE VIEW

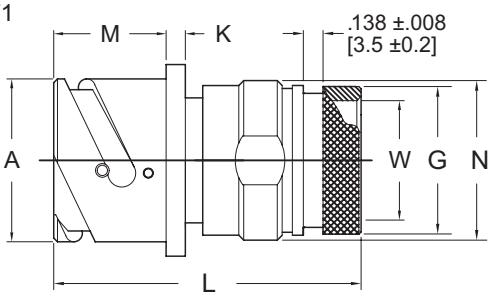

SCPB030AG2G* **Environmental, no grommet**
SCPB030G2G* **Environmental with grommet**

SHELL SIZE	FRONT VIEW					SIDE VIEW						
	R ±.004 [±0.1]	S ±.012 [±0.3]	T1 +.004 [+0.1] -.000 [-0.0]	T2 THREAD METRIC	T2 THREAD UNC	A +.000 [+0.00] -.006 [-0.15]	G ±.008 [±0.2]	K ±.008 [±0.2]	L APRX	M +.016 [+0.4] -.000 [-0.0]	N MAX	W MIN
10SL	.717 [18.20]	1.000 [25.40]	.126 [3.20]	M4	8-32UNC	.717 [18.20]	.610 [15.50]	.110 [2.80]	1.961 [49.80]	.717 [18.20]	.866 [22.00]	.335 [8.50]
14S	.906 [23.00]	1.181 [30.00]	.126 [3.20]	M4	8-32UNC	.969 [24.60]	.752 [19.10]	.126 [3.20]	1.961 [49.80]	.717 [18.20]	.984 [25.00]	.472 [12.00]
16S	.969 [24.60]	1.280 [32.50]	.126 [3.20]	M4	8-32UNC	1.079 [27.40]	.941 [23.90]	.126 [3.20]	1.992 [50.60]	.717 [18.20]	1.102 [28.00]	.571 [14.50]
16	.969 [24.60]	1.280 [32.50]	.126 [3.20]	M4	8-32UNC	1.079 [27.40]	.941 [23.90]	.126 [3.20]	2.366 [60.10]	.907 [23.05]	1.102 [28.00]	.571 [14.50]
18	1.063 [27.00]	1.378 [35.00]	.126 [3.20]	M4	8-32UNC	1.213 [30.80]	.941 [23.90]	.157 [4.00]	2.346 [59.60]	.907 [23.05]	1.220 [31.00]	.689 [17.50]
20	1.157 [29.40]	1.496 [38.00]	.126 [3.20]	M4	8-32UNC	1.346 [34.20]	1.165 [29.60]	.157 [4.00]	2.374 [60.30]	.907 [23.05]	1.378 [35.00]	.768 [19.50]
22	1.252 [31.80]	1.614 [41.00]	.126 [3.20]	M4	8-32UNC	1.472 [37.40]	1.165 [29.60]	.157 [4.00]	2.374 [60.30]	.907 [23.05]	1.496 [38.00]	.866 [22.00]
24	1.374 [34.90]	1.752 [44.50]	.146 [3.70]	M4	10-24UNC	1.610 [40.90]	1.488 [37.80]	.157 [4.00]	2.476 [62.90]	.907 [23.05]	1.614 [41.00]	.984 [25.00]
28	1.563 [39.70]	2.000 [50.80]	.146 [3.70]	M5	10-24UNC	1.839 [46.70]	1.488 [37.80]	.157 [4.00]	2.547 [64.70]	.947 [24.05]	1.890 [48.00]	1.142 [29.00]
32	1.752 [44.50]	2.244 [57.00]	.169 [4.30]	M5	1/4-20UNC	2.102 [53.40]	1.882 [47.80]	.157 [4.00]	2.638 [67.00]	.947 [24.05]	2.126 [54.00]	1.339 [34.00]
36	1.937 [49.20]	2.500 [63.50]	.169 [4.30]	M5	1/4-20UNC	2.346 [59.60]	1.882 [47.80]	.157 [4.00]	2.638 [67.00]	.947 [24.05]	2.402 [61.00]	1.516 [38.50]
40	2.185 [55.50]	2.752 [69.90]	.169 [4.30]	M5	1/4-20UNC	2.579 [65.50]	2.063 [52.40]	.157 [4.00]	2.650 [67.30]	.947 [24.05]	2.677 [68.00]	1.890 [48.00]

Dimensions are in Inches [mm]

030APT*

MOUNTING HOLE OPTION

THREADED
MOUNTING HOLE CODES

CODE	MOUNTING HOLE TYPE
FP	Thru holes
None	Metric thread - Standard
UN	UNC thread

FRONT VIEW

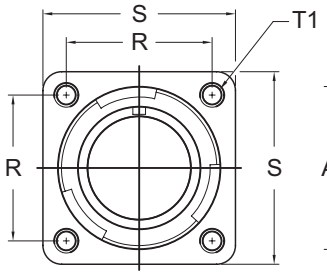

SIDE VIEW

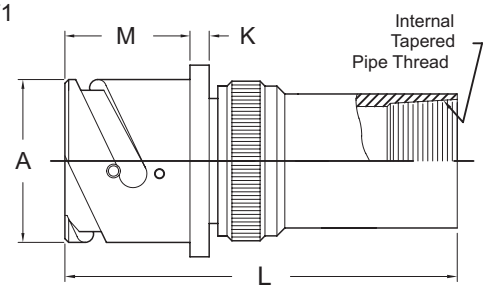

SCPB030APT* Environmental, no grommet

SHELL SIZE	FRONT VIEW					SIDE VIEW					
	R ±.004 [±0.1]	S ±.012 [±0.3]	T1 +.004 [+0.1] -.000 [-0.0] STYLE FP	T2 THREAD METRIC	T2 THREAD UNC	A +.000 [+0.00] -.006 [-0.15]	K ±.008 [±0.2]	L MAX	M +.016 [+0.4] -.000 [-0.0]	CODE	PIPE THREAD
10SL	.717 [18.20]	1.000 [25.40]	.126 [3.20]	M4	8-32UNC	.717 [18.20]	.110 [2.80]	2.362 [60.00]	.717 [18.20]	01	1/8
14S	.906 [23.00]	1.181 [30.00]	.126 [3.20]	M4	8-32UNC	.969 [24.60]	.126 [3.20]	2.362 [60.00]	.717 [18.20]	02	1/4
16S	.969 [24.60]	1.280 [32.50]	.126 [3.20]	M4	8-32UNC	1.079 [27.40]	.126 [3.20]	2.362 [60.00]	.717 [18.20]	03	3/8
16	.969 [24.60]	1.280 [32.50]	.126 [3.20]	M4	8-32UNC	1.079 [27.40]	.126 [3.20]	2.756 [70.00]	.907 [23.05]	04	1/2
18	1.063 [27.00]	1.378 [35.00]	.126 [3.20]	M4	8-32UNC	1.213 [30.80]	.157 [4.00]	2.756 [70.00]	.907 [23.05]	05	3/4
20	1.157 [29.40]	1.496 [38.00]	.126 [3.20]	M4	8-32UNC	1.346 [34.20]	.157 [4.00]	2.756 [70.00]	.907 [23.05]	06	1
22	1.252 [31.80]	1.614 [41.00]	.126 [3.20]	M4	8-32UNC	1.472 [37.40]	.157 [4.00]	2.756 [70.00]	.907 [23.05]	07	1 1/4
24	1.374 [34.90]	1.752 [44.50]	.146 [3.70]	M4	10-24UNC	1.610 [40.90]	.157 [4.00]	3.150 [80.00]	.907 [23.05]	08	1 1/2
28	1.563 [39.70]	2.000 [50.80]	.146 [3.70]	M5	10-24UNC	1.839 [46.70]	.157 [4.00]	3.150 [80.00]	.947 [24.05]	09	2
32	1.752 [44.50]	2.244 [57.00]	.169 [4.30]	M5	1/4-20UNC	2.102 [53.40]	.157 [4.00]	3.150 [80.00]	.947 [24.05]	10	2 1/2
36	1.937 [49.20]	2.500 [63.50]	.169 [4.30]	M5	1/4-20UNC	2.346 [59.60]	.157 [4.00]	3.740 [95.00]	.947 [24.05]	–	–
40	2.185 [55.50]	2.752 [69.90]	.169 [4.30]	M5	1/4-20UNC	2.579 [65.50]	.157 [4.00]	3.740 [95.00]	.947 [24.05]	–	–

Dimensions are in Inches [mm]

SPACECRAFT COMPONENTS CORP.
3040 Clayton Street
North Las Vegas, NV 89032
Phone: 702.851.7600
Fax: 702.851.7620
Email: salesinfo@spacecraft.com
Web: www.spacecraft.com

WALL MOUNT RECEPTACLE, REAR PANEL MOUNT

030ARK*/030RK*

MOUNTING HOLE OPTIONS

THREADED

MOUNTING HOLE CODES

CODE	MOUNTING HOLE TYPE
FP	Thru holes
None	Metric thread - Standard
UN	UNC thread

FRONT VIEW

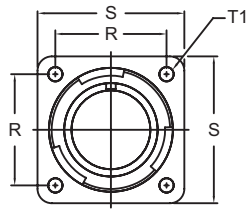

SIDE VIEW

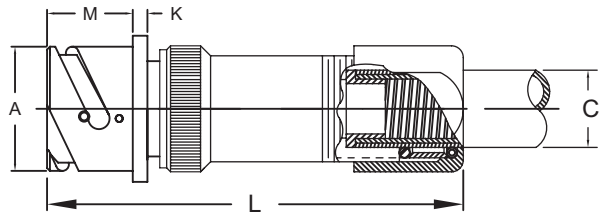

SCPB030ARK* **Environmental less grommet**
SCPB030RK* **Environmental with grommet**

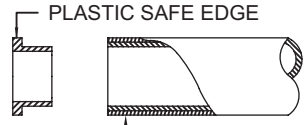

SHELL SIZE	FRONT VIEW					SIDE VIEW			
	R ±.004 [±0.1]	S ±.012 [±0.3]	T1 +.004 [+0.1] -.000 [-0.0]	T2 THREAD METRIC	T2 THREAD UNC	A +.000 [+0.00] -.006 [-0.15]	K ±.008 [±0.2]	L	M +.016 [+0.4] -.000 [-0.0]
10SL	.717 [18.20]	1.000 [25.40]	.126 [3.20]	M4	8-32UNC	.717 [18.20]	.110 [2.80]	Dimension L is dependent on the back-shell used, the cable range and the fitting used. **Consult factory.**	.717 [18.20]
14S	.906 [23.00]	1.181 [30.00]	.126 [3.20]	M4	8-32UNC	.969 [24.60]	.126 [3.20]		.717 [18.20]
16S	.969 [24.60]	1.280 [32.50]	.126 [3.20]	M4	8-32UNC	1.079 [27.40]	.126 [3.20]		.717 [18.20]
16	.969 [24.60]	1.280 [32.50]	.126 [3.20]	M4	8-32UNC	1.079 [27.40]	.126 [3.20]		.907 [23.05]
18	1.063 [27.00]	1.378 [35.00]	.126 [3.20]	M4	8-32UNC	1.213 [30.80]	.157 [4.00]		.907 [23.05]
20	1.157 [29.40]	1.496 [38.00]	.126 [3.20]	M4	8-32UNC	1.346 [34.20]	.157 [4.00]		.907 [23.05]
22	1.252 [31.80]	1.614 [41.00]	.126 [3.20]	M4	8-32UNC	1.472 [37.40]	.157 [4.00]		.907 [23.05]
24	1.374 [34.90]	1.752 [44.50]	.146 [3.70]	M4	10-24UNC	1.610 [40.90]	.157 [4.00]		.907 [23.05]
28	1.563 [39.70]	2.000 [50.80]	.146 [3.70]	M5	10-24UNC	1.839 [46.70]	.157 [4.00]		.947 [24.05]
32	1.752 [44.50]	2.244 [57.00]	.169 [4.30]	M5	1/4-20UNC	2.102 [53.40]	.157 [4.00]		.947 [24.05]
36	1.937 [49.20]	2.500 [63.50]	.169 [4.30]	M5	1/4-20UNC	2.346 [59.60]	.157 [4.00]		.947 [24.05]
40	2.185 [55.50]	2.752 [69.90]	.169 [4.30]	M5	1/4-20UNC	2.579 [65.50]	.157 [4.00]		.947 [24.05]

Dimensions are in Inches [mm]

CODE (***)	AVAILABLE CONDUIT SIZES C
(038)	3/8 [9.52]
(050)	1/2 [12.70]
(075)	3/4 [19.05]
(100)	1 [25.40]
(125)	1 1/4 [31.75]
(150)	1 1/2 [38.10]
(200)	2 [50.80]

(***) Conduit Size must be specified as part of the connector part number using Conduit Code

030ARV*/030RV*

MOUNTING HOLE OPTION

THREADED
MOUNTING HOLE CODES

CODE	MOUNTING HOLE TYPE
FP	Thru holes
None	Metric thread - Standard
UN	UNC thread

FRONT VIEW

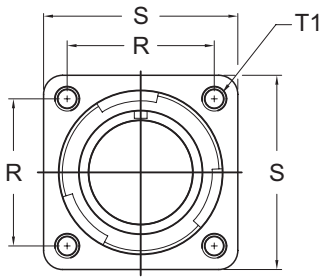

SIDE VIEW

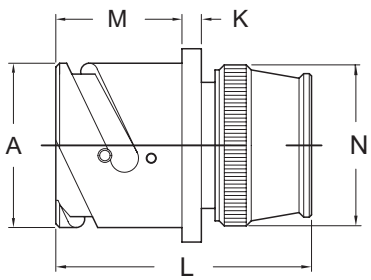

SCPB030ARV* **Non-environmental, no grommet**
SCPB030RV* **Environmental with grommet**

SHELL SIZE	FRONT VIEW					SIDE VIEW				
	R ±.004 [±0.1]	S ±.012 [±0.3]	T1 +.004 [+0.1] -.000 [-0.0] STYLE FP	T2 THREAD METRIC	T2 THREAD UNC	A +.000 [+0.00] -.006 [-0.15]	K ±.008 [±0.2]	L MAX	M +.016 [+0.4] -.000 [-0.0]	N MAX
10SL	.717 [18.20]	1.000 [25.40]	.126 [3.20]	M4	8-32UNC	.717 [18.20]	.110 [2.80]	1.693 [43.00]	.717 [18.20]	.787 [20.00]
14S	.906 [23.00]	1.181 [30.00]	.126 [3.20]	M4	8-32UNC	.969 [24.60]	.126 [3.20]	1.693 [43.00]	.717 [18.20]	.945 [24.00]
16S	.969 [24.60]	1.280 [32.50]	.126 [3.20]	M4	8-32UNC	1.079 [27.40]	.126 [3.20]	1.693 [43.00]	.717 [18.20]	1.024 [26.00]
16	.969 [24.60]	1.280 [32.50]	.126 [3.20]	M4	8-32UNC	1.079 [27.40]	.126 [3.20]	2.205 [56.00]	.907 [23.05]	1.024 [26.00]
18	1.063 [27.00]	1.378 [35.00]	.126 [3.20]	M4	8-32UNC	1.213 [30.80]	.157 [4.00]	2.205 [56.00]	.907 [23.05]	1.161 [29.50]
20	1.157 [29.40]	1.496 [38.00]	.126 [3.20]	M4	8-32UNC	1.346 [34.20]	.157 [4.00]	2.244 [57.00]	.907 [23.05]	1.299 [33.00]
22	1.252 [31.80]	1.614 [41.00]	.126 [3.20]	M4	8-32UNC	1.472 [37.40]	.157 [4.00]	2.244 [57.00]	.907 [23.05]	1.417 [36.00]
24	1.374 [34.90]	1.752 [44.50]	.146 [3.70]	M4	10-24UNC	1.610 [40.90]	.157 [4.00]	2.244 [57.00]	.907 [23.05]	1.575 [40.00]
28	1.563 [39.70]	2.000 [50.80]	.146 [3.70]	M5	10-24UNC	1.839 [46.70]	.157 [4.00]	2.323 [59.00]	.947 [24.05]	1.811 [46.00]
32	1.752 [44.50]	2.244 [57.00]	.169 [4.30]	M5	1/4-20UNC	2.102 [53.40]	.157 [4.00]	2.362 [60.00]	.947 [24.05]	2.028 [51.50]
36	1.937 [49.20]	2.500 [63.50]	.169 [4.30]	M5	1/4-20UNC	2.346 [59.60]	.157 [4.00]	2.362 [60.00]	.947 [24.05]	2.283 [58.00]
40	2.185 [55.50]	2.752 [69.90]	.169 [4.30]	M5	1/4-20UNC	2.579 [65.50]	.157 [4.00]	2.402 [61.00]	.947 [24.05]	2.539 [64.50]

Dimensions are in Inches [mm]

WALL MOUNT RECEPTACLE, REAR PANEL MOUNT

030ASB*/030SB*

MOUNTING HOLE OPTION

THREADED
MOUNTING HOLE CODES

CODE	MOUNTING HOLE TYPE
FP	Thru holes
None	Metric thread - Standard
UN	UNC thread

FRONT VIEW

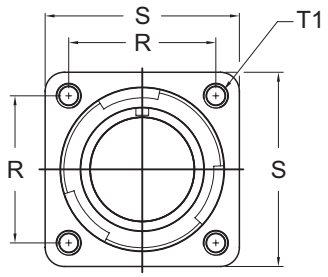

SIDE VIEW

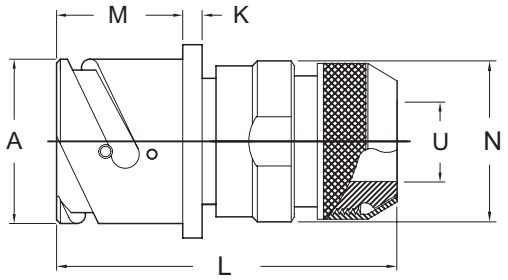

SCPB030SV* Environmental, no grommet

SHELL SIZE	FRONT VIEW					SIDE VIEW							
	R ±.004 [±0.1]	S ±.012 [±0.3]	T1 +.004 [+0.1] -.000 [-0.0] STYLE FP	T2 THREAD METRIC	T2 THREAD UNC	A +.000 [+0.00] -.006 [-0.15]	G MAX	K ±.008 [±0.2]	L MAX	M +.016 [+0.4] -.000 [-0.0]	W MIN	X ±.016 [±0.4] .240 BAND	X ±.016 [±0.4] .120 BAND
10SL	.717 [18.20]	1.000 [25.40]	.126 [3.20]	M4	8-32UNC	.717 [18.20]	.634 [16.10]	.110 [2.80]	1.320 [33.53]	.717 [18.20]	.476 [12.10]	–	.228 [5.80]
14S	.906 [23.00]	1.181 [30.00]	.126 [3.20]	M4	8-32UNC	.969 [24.60]	.756 [19.20]	.126 [3.20]	1.320 [33.53]	.717 [18.20]	.606 [15.40]	–	.228 [5.80]
16S	.969 [24.60]	1.280 [32.50]	.126 [3.20]	M4	8-32UNC	1.079 [27.40]	.882 [22.40]	.126 [3.20]	1.320 [33.53]	.717 [18.20]	.736 [18.70]	–	.228 [5.80]
16	.969 [24.60]	1.280 [32.50]	.126 [3.20]	M4	8-32UNC	1.079 [27.40]	.882 [22.40]	.126 [3.20]	1.685 [42.80]	.907 [23.05]	.736 [18.70]	.146 [3.70]	–
18	1.063 [27.00]	1.378 [35.00]	.126 [3.20]	M4	8-32UNC	1.213 [30.80]	1.004 [25.50]	.157 [4.00]	1.685 [42.80]	.907 [23.05]	.862 [21.90]	.146 [3.70]	–
20	1.157 [29.40]	1.496 [38.00]	.126 [3.20]	M4	8-32UNC	1.346 [34.20]	1.130 [28.70]	.157 [4.00]	1.685 [42.80]	.907 [23.05]	.976 [24.80]	.146 [3.70]	–
22	1.252 [31.80]	1.614 [41.00]	.126 [3.20]	M4	8-32UNC	1.472 [37.40]	1.256 [31.90]	.157 [4.00]	1.685 [42.80]	.907 [23.05]	1.106 [28.10]	.146 [3.70]	–
24	1.374 [34.90]	1.752 [44.50]	.146 [3.70]	M4	10-24UNC	1.610 [40.90]	1.382 [35.10]	.157 [4.00]	1.685 [42.80]	.907 [23.05]	1.228 [31.20]	.146 [3.70]	–
28	1.563 [39.70]	2.000 [50.80]	.146 [3.70]	M5	10-24UNC	1.839 [46.70]	1.630 [41.40]	.157 [4.00]	1.725 [43.82]	.947 [24.05]	1.413 [35.90]	.185 [4.70]	–
32	1.752 [44.50]	2.244 [57.00]	.169 [4.30]	M5	1/4-20UNC	2.102 [53.40]	1.882 [47.80]	.157 [4.00]	1.725 [43.82]	.947 [24.05]	1.697 [43.10]	.185 [4.70]	–
36	1.937 [49.20]	2.500 [63.50]	.169 [4.30]	M5	1/4-20UNC	2.346 [59.60]	2.067 [52.50]	.157 [4.00]	1.725 [43.82]	.947 [24.05]	1.890 [48.00]	.185 [4.70]	–
40	2.185 [55.50]	2.752 [69.90]	.169 [4.30]	M5	1/4-20UNC	2.579 [65.50]	2.319 [58.90]	.157 [4.00]	1.725 [43.82]	.947 [24.05]	2.118 [53.80]	.185 [4.70]	–

Dimensions are in Inches [mm]

030ASBF*/030SBF*

MOUNTING HOLE OPTION

THREADED
MOUNTING HOLE CODES

CODE	MOUNTING HOLE TYPE
FP	Thru holes
None	Metric thread - Standard
UN	UNC thread

FRONT VIEW

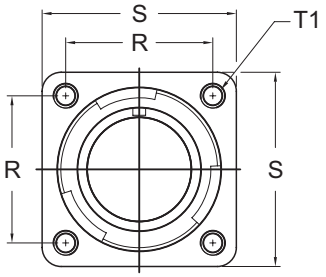

SIDE VIEW

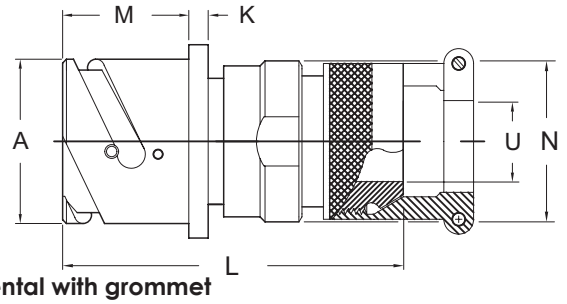

SCPB030TRAC* Environmental with grommet

SHELL SIZE	FRONT VIEW					SIDE VIEW			
	R ±.004 [±0.1]	S ±.012 [±0.3]	T1 +.004 [+0.1] -.000 [-0.0]	T2 THREAD METRIC	T2 THREAD UNC	A +.000 [+0.00] -.006 [-0.15]	K ±.008 [±0.2]	L	M +.016 [+0.4] -.000 [-0.0]
10SL	.717 [18.20]	1.000 [25.40]	.126 [3.20]	M4	8-32UNC	.717 [18.20]	.110 [2.80]	Dimension L is dependent on the back-shell used, the cable range and the fitting used. **Consult factory.**	.717 [18.20]
14S	.906 [23.00]	1.181 [30.00]	.126 [3.20]	M4	8-32UNC	.969 [24.60]	.126 [3.20]		.717 [18.20]
16S	.969 [24.60]	1.280 [32.50]	.126 [3.20]	M4	8-32UNC	1.079 [27.40]	.126 [3.20]		.717 [18.20]
16	.969 [24.60]	1.280 [32.50]	.126 [3.20]	M4	8-32UNC	1.079 [27.40]	.126 [3.20]		.907 [23.05]
18	1.063 [27.00]	1.378 [35.00]	.126 [3.20]	M4	8-32UNC	1.213 [30.80]	.157 [4.00]		.907 [23.05]
20	1.157 [29.40]	1.496 [38.00]	.126 [3.20]	M4	8-32UNC	1.346 [34.20]	.157 [4.00]		.907 [23.05]
22	1.252 [31.80]	1.614 [41.00]	.126 [3.20]	M4	8-32UNC	1.472 [37.40]	.157 [4.00]		.907 [23.05]
24	1.374 [34.90]	1.752 [44.50]	.146 [3.70]	M4	10-24UNC	1.610 [40.90]	.157 [4.00]		.907 [23.05]
28	1.563 [39.70]	2.000 [50.80]	.146 [3.70]	M5	10-24UNC	1.839 [46.70]	.157 [4.00]		.947 [24.05]
32	1.752 [44.50]	2.244 [57.00]	.169 [4.30]	M5	1/4-20UNC	2.102 [53.40]	.157 [4.00]		.947 [24.05]
36	1.937 [49.20]	2.500 [63.50]	.169 [4.30]	M5	1/4-20UNC	2.346 [59.60]	.157 [4.00]		.947 [24.05]
40	2.185 [55.50]	2.752 [69.90]	.169 [4.30]	M5	1/4-20UNC	2.579 [65.50]	.157 [4.00]		.947 [24.05]

Dimensions are in Inches [mm]

SPACECRAFT COMPONENTS CORP.
3040 Clayton Street
North Las Vegas, NV 89032
Phone: 702.851.7600
Fax: 702.851.7620
Email: salesinfo@spacecraft.com
Web: www.spacecraft.com

WALL MOUNT RECEPTACLE, REAR PANEL MOUNT

030ASBT*/030SBT*

MOUNTING HOLE OPTION

THREADED

MOUNTING HOLE CODES

CODE	MOUNTING HOLE TYPE
FP	Thru holes
None	Metric thread - Standard
UN	UNC thread

FRONT VIEW

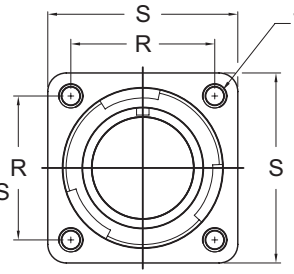

SIDE VIEW

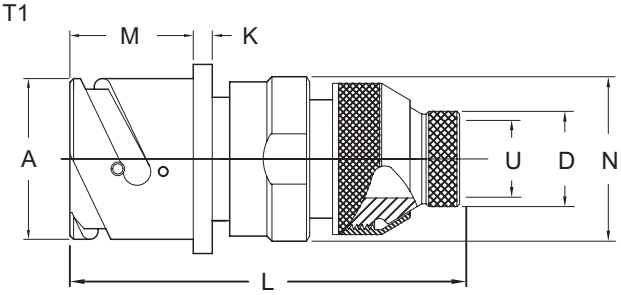

SCPB030ASBT* **Non-environmental, no grommet**
SCPB030SBT* **Environmental with grommet**

SHELL SIZE	FRONT VIEW					SIDE VIEW						
	R ±.004 [±0.1]	S ±.012 [±0.3]	T1 +.004 [+0.1] -.000 [-0.0] STYLE FP	T2 THREAD METRIC	T2 THREAD UNC	A +.000 [+0.00] -.006 [-0.15]	D MAX	K ±.008 [±0.2]	L MAX	M +.016 [+0.4] -.000 [-0.0]	N MAX	U MIN
10SL	.717 [18.20]	1.000 [25.40]	.126 [3.20]	M4	8-32UNC	.717 [18.20]	.437 [11.10]	.110 [2.80]	2.402 [61.00]	.717 [18.20]	.866 [22.00]	.299 [7.60]
14S	.906 [23.00]	1.181 [30.00]	.126 [3.20]	M4	8-32UNC	.969 [24.60]	.563 [14.30]	.126 [3.20]	2.520 [64.00]	.717 [18.20]	.984 [25.00]	.425 [10.80]
16S	.969 [24.60]	1.280 [32.50]	.126 [3.20]	M4	8-32UNC	1.079 [27.40]	.626 [15.90]	.126 [3.20]	2.756 [70.00]	.717 [18.20]	1.102 [28.00]	.488 [12.40]
16	.969 [24.60]	1.280 [32.50]	.126 [3.20]	M4	8-32UNC	1.079 [27.40]	.626 [15.90]	.126 [3.20]	3.150 [80.00]	.907 [23.05]	1.102 [28.00]	.488 [12.40]
18	1.063 [27.00]	1.378 [35.00]	.126 [3.20]	M4	8-32UNC	1.213 [30.80]	.752 [19.10]	.157 [4.00]	3.150 [80.00]	.907 [23.05]	1.220 [31.00]	.614 [15.60]
20	1.157 [29.40]	1.496 [38.00]	.126 [3.20]	M4	8-32UNC	1.346 [34.20]	.878 [22.30]	.157 [4.00]	3.150 [80.00]	.907 [23.05]	1.378 [35.00]	.736 [18.70]
22	1.252 [31.80]	1.614 [41.00]	.126 [3.20]	M4	8-32UNC	1.472 [37.40]	1.000 [25.40]	.157 [4.00]	3.150 [80.00]	.907 [23.05]	1.496 [38.00]	.862 [21.90]
24	1.374 [34.90]	1.752 [44.50]	.146 [3.70]	M4	10-24UNC	1.610 [40.90]	1.126 [28.60]	.157 [4.00]	3.150 [80.00]	.907 [23.05]	1.614 [41.00]	.988 [25.10]
28	1.563 [39.70]	2.000 [50.80]	.146 [3.70]	M5	10-24UNC	1.839 [46.70]	1.252 [31.80]	.157 [4.00]	3.150 [80.00]	.947 [24.05]	1.890 [48.00]	1.114 [28.30]
32	1.752 [44.50]	2.244 [57.00]	.169 [4.30]	M5	1/4-20UNC	2.102 [53.40]	1.441 [36.60]	.157 [4.00]	3.150 [80.00]	.947 [24.05]	2.126 [54.00]	1.114 [28.30]
36	1.937 [49.20]	2.500 [63.50]	.169 [4.30]	M5	1/4-20UNC	2.346 [59.60]	1.752 [44.50]	.157 [4.00]	3.346 [85.00]	.947 [24.05]	2.402 [61.00]	1.614 [41.00]
40	2.185 [55.50]	2.752 [69.90]	.169 [4.30]	M5	1/4-20UNC	2.579 [65.50]	2.000 [50.80]	.157 [4.00]	3.346 [85.00]	.947 [24.05]	2.677 [68.00]	1.598 [40.60]

Dimensions are in Inches [mm]
1. Dimension "L" will vary from the values indicated for some special insert configurations.

030CF*/030CFZ*

MOUNTING HOLE OPTION

THREADED

MOUNTING HOLE CODES

CODE	MOUNTING HOLE TYPE
FP	Thru holes
None	Metric thread - Standard
UN	UNC thread

FRONT VIEW

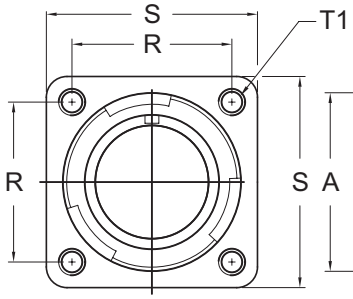

SIDE VIEW

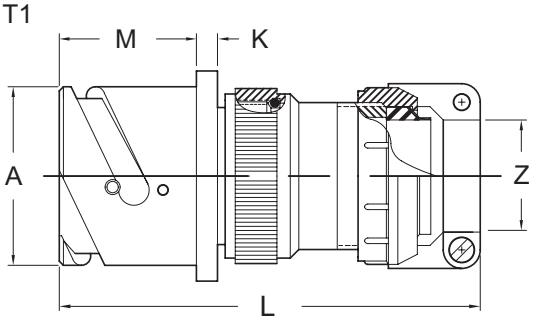

SCPB030CF* **Environmental, no grommet**
SCPB030CFZ* **Environmental with grommet**

SHELL SIZE	FRONT VIEW					SIDE VIEW					
	R ±.004 [±0.1]	S ±.012 [±0.3]	T1 +.004 [+0.1] -.000 [-0.0] STYLE FP	T2 THREAD METRIC	T2 THREAD UNC	A +.000 [+0.00] -.006 [-0.15]	K ±.008 [±0.2]	L MAX	M +.016 [+0.4] -.000 [-0.0]	Z OPEN	Z CLOSED
10SL	.717 [18.20]	1.000 [25.40]	.126 [3.20]	M4	8-32UNC	.717 [18.20]	.110 [2.80]	2.874 [73.0]	.717 [18.20]	.312 [7.93]	.094 [2.38]
14S	.906 [23.00]	1.181 [30.00]	.126 [3.20]	M4	8-32UNC	.969 [24.60]	.126 [3.20]	3.031 [77.0]	.717 [18.20]	.438 [11.12]	.230 [5.84]
16S	.969 [24.60]	1.280 [32.50]	.126 [3.20]	M4	8-32UNC	1.079 [27.40]	.126 [3.20]	3.031 [77.0]	.717 [18.20]	.531 [13.48]	.315 [8.00]
16	.969 [24.60]	1.280 [32.50]	.126 [3.20]	M4	8-32UNC	1.079 [27.40]	.126 [3.20]	3.465 [88.0]	.907 [23.05]	.531 [13.48]	.315 [8.00]
18	1.063 [27.00]	1.378 [35.00]	.126 [3.20]	M4	8-32UNC	1.213 [30.80]	.157 [4.00]	3.583 [91.0]	.907 [23.05]	.625 [15.87]	.378 [9.60]
20	1.157 [29.40]	1.496 [38.00]	.126 [3.20]	M4	8-32UNC	1.346 [34.20]	.157 [4.00]	3.583 [91.0]	.907 [23.05]	.748 [19.00]	.445 [11.30]
22	1.252 [31.80]	1.614 [41.00]	.126 [3.20]	M4	8-32UNC	1.472 [37.40]	.157 [4.00]	3.622 [92.0]	.907 [23.05]	.748 [19.00]	.445 [11.30]
24	1.374 [34.90]	1.752 [44.50]	.146 [3.70]	M4	10-24UNC	1.610 [40.90]	.157 [4.00]	3.819 [97.0]	.907 [23.05]	.937 [23.80]	.610 [15.50]
28	1.563 [39.70]	2.000 [50.80]	.146 [3.70]	M5	10-24UNC	1.839 [46.70]	.157 [4.00]	4.055 [103.0]	.947 [24.05]	.937 [23.80]	.610 [15.50]
32	1.752 [44.50]	2.244 [57.00]	.169 [4.30]	M5	1/4-20UNC	2.102 [53.40]	.157 [4.00]	4.449 [113.0]	.947 [24.05]	1.250 [31.75]	.921 [23.40]
36	1.937 [49.20]	2.500 [63.50]	.169 [4.30]	M5	1/4-20UNC	2.346 [59.60]	.157 [4.00]	4.724 [120.0]	.947 [24.05]	1.378 [35.00]	.921 [23.40]
40	2.185 [55.50]	2.752 [69.90]	.169 [4.30]	M5	1/4-20UNC	2.579 [65.50]	.157 [4.00]	5.315 [135.0]	.947 [24.05]	1.624 [41.25]	1.177 [29.90]

Dimensions are in Inches [mm]

WALL MOUNT RECEPTACLE, REAR PANEL MOUNT

030CMEG*

MOUNTING HOLE OPTIONS

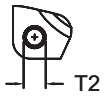

THREADED
MOUNTING HOLE CODES

CODE	MOUNTING HOLE TYPE
FP	Thru holes
None	Metric thread - Standard
UN	UNC thread

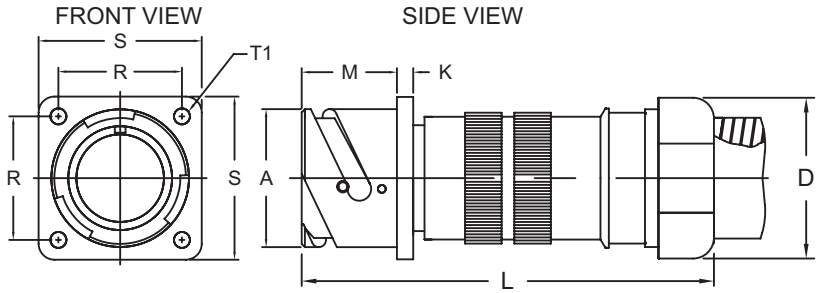

SCPB030CMEG* Environmental with grommet

SHELL SIZE	FRONT VIEW					SIDE VIEW			
	R ±.004 [±0.1]	S ±.012 [±0.3]	T1 +.004 [+0.1] -.000 [-0.0]	T2 THREAD METRIC	T2 THREAD UNC	A +.000 [+0.00] -.006 [-0.15]	K ±.008 [±0.2]	L	M +.016 [+0.4] -.000 [-0.0]
10SL	.717 [18.20]	1.000 [25.40]	.126 [3.20]	M4	8-32UNC	.717 [18.20]	.110 [2.80]	Dimension L is dependent on the backshell used, the cable range and the fitting used. **Consult factory.**	.717 [18.20]
14S	.906 [23.00]	1.181 [30.00]	.126 [3.20]	M4	8-32UNC	.969 [24.60]	.126 [3.20]		.717 [18.20]
16S	.969 [24.60]	1.280 [32.50]	.126 [3.20]	M4	8-32UNC	1.079 [27.40]	.126 [3.20]		.717 [18.20]
16	.969 [24.60]	1.280 [32.50]	.126 [3.20]	M4	8-32UNC	1.079 [27.40]	.126 [3.20]		.907 [23.05]
18	1.063 [27.00]	1.378 [35.00]	.126 [3.20]	M4	8-32UNC	1.213 [30.80]	.157 [4.00]		.907 [23.05]
20	1.157 [29.40]	1.496 [38.00]	.126 [3.20]	M4	8-32UNC	1.346 [34.20]	.157 [4.00]		.907 [23.05]
22	1.252 [31.80]	1.614 [41.00]	.126 [3.20]	M4	8-32UNC	1.472 [37.40]	.157 [4.00]		.907 [23.05]
24	1.374 [34.90]	1.752 [44.50]	.146 [3.70]	M4	10-24UNC	1.610 [40.90]	.157 [4.00]		.907 [23.05]
28	1.563 [39.70]	2.000 [50.80]	.146 [3.70]	M5	10-24UNC	1.839 [46.70]	.157 [4.00]		.947 [24.05]
32	1.752 [44.50]	2.244 [57.00]	.169 [4.30]	M5	1/4-20UNC	2.102 [53.40]	.157 [4.00]		.947 [24.05]
36	1.937 [49.20]	2.500 [63.50]	.169 [4.30]	M5	1/4-20UNC	2.346 [59.60]	.157 [4.00]		.947 [24.05]
40	2.185 [55.50]	2.752 [69.90]	.169 [4.30]	M5	1/4-20UNC	2.579 [65.50]	.157 [4.00]		.947 [24.05]

Dimensions are in Inches [mm]

CONDUIT SIZE			
CABLE CODE	ELECTRI-FLEX CONDUIT TRADE SIZE	SHELL SIZE	D APRX.
075	3/4	20	1.65 [41.9]
		24	1.65 [41.9]
		36	1.65 [41.9]
100	100	20	1.88 [47.6]

For other sizes consult factory

030FR*

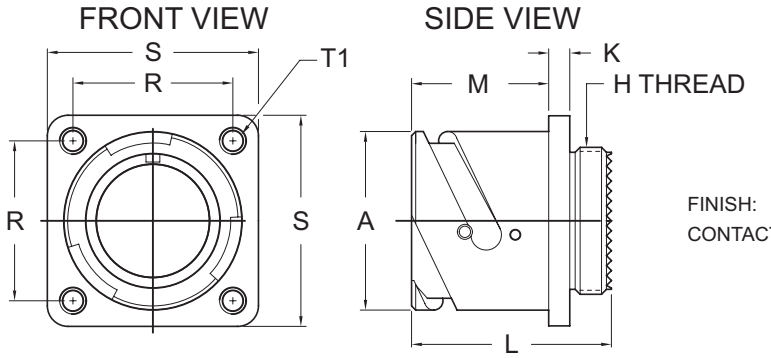

FINISH: BLACK ANODIZE
CONTACTS: F80 SILVER PLATED CRIMP CONTACTS

EXAMPLE PART NUMBER: SCPB030FR24-28P

SHELL SIZE	FRONT VIEW			SIDE VIEW				
	R ±.004 [±0.1]	S ±.012 [±0.3]	T1 +.004 [+0.1] -.000 [-0.0] STYLE FP	A +.000 [+0.00] -.006 [-0.15]	H THREAD CLASS 2A	K ±.008 [±0.2]	L ±.012 [±0.3]	M +.016 [+0.4] -.000 [-0.0]
10SL	.717 [18.20]	1.000 [25.40]	.126 [3.20]	.717 [18.20]	5/8-24 UNEF	.110 [2.80]	1.087 [27.60]	.717 [18.20]
14S	.906 [23.00]	1.181 [30.00]	.126 [3.20]	.969 [24.60]	3/4-20 UNEF	.126 [3.20]	1.087 [27.60]	.717 [18.20]
16S	.969 [24.60]	1.280 [32.50]	.126 [3.20]	1.079 [27.40]	7/8-20 UNEF	.126 [3.20]	1.087 [27.60]	.717 [18.20]
16	.969 [24.60]	1.280 [32.50]	.126 [3.20]	1.079 [27.40]	7/8-20 UNEF	.126 [3.20]	1.331 [33.80]	.907 [23.05]
18	1.063 [27.00]	1.378 [35.00]	.126 [3.20]	1.213 [30.80]	1-20 UNEF	.157 [4.00]	1.331 [33.80]	.907 [23.05]
20	1.157 [29.40]	1.496 [38.00]	.126 [3.20]	1.346 [34.20]	1 1/8-18 UNEF	.157 [4.00]	1.331 [33.80]	.907 [23.05]
22	1.252 [31.80]	1.614 [41.00]	.126 [3.20]	1.472 [37.40]	1 1/4-18 UNEF	.157 [4.00]	1.331 [33.80]	.907 [23.05]
24	1.374 [34.90]	1.752 [44.50]	.146 [3.70]	1.610 [40.90]	1 3/8-18 UNEF	.157 [4.00]	1.409 [35.80]	.907 [23.05]
28	1.563 [39.70]	2.000 [50.80]	.146 [3.70]	1.839 [46.70]	1 5/8-18 UNEF	.157 [4.00]	1.409 [35.80]	.947 [24.05]
32	1.752 [44.50]	2.244 [57.00]	.169 [4.30]	2.102 [53.40]	1 7/8-16 UN	.157 [4.00]	1.469 [37.30]	.947 [24.05]
36	1.937 [49.20]	2.500 [63.50]	.169 [4.30]	2.346 [59.60]	2 1/16-16 UN	.157 [4.00]	1.469 [37.30]	.947 [24.05]
40	2.185 [55.50]	2.752 [69.90]	.169 [4.30]	2.579 [65.50]	2 5/16-16 UNS	.157 [4.00]	1.469 [37.30]	.947 [24.05]

Dimensions are in Inches [mm]

SPACECRAFT COMPONENTS CORP.
3040 Clayton Street
North Las Vegas, NV 89032
Phone: 702.851.7600
Fax: 702.851.7620
Email: salesinfo@spacecraft.com
Web: www.spacecraft.com

WALL MOUNT RECEPTACLE, REAR PANEL MOUNT

030FR**(C)

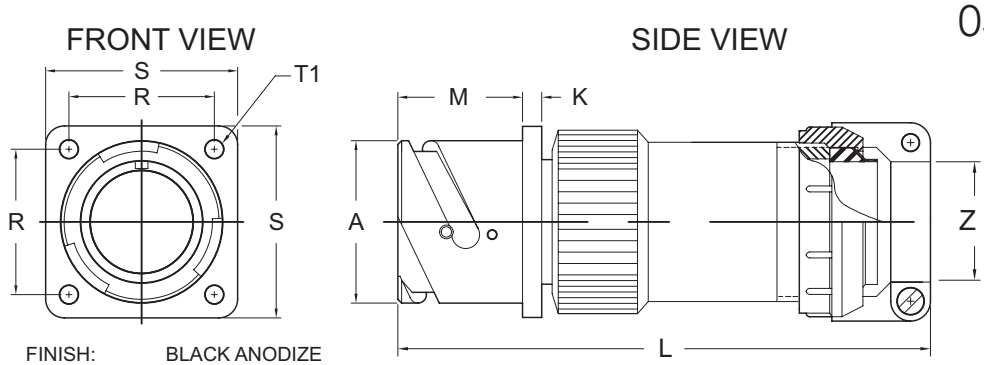

FINISH: BLACK ANODIZE
CONTACTS: F80 SILVER PLATED CRIMP CONTACTS

EXAMPLE PART NUMBER: SCPB030FR24-28P-08C

SHELL SIZE	FRONT VIEW			SIDE VIEW			
	R ±.004 [±0.1]	S ±.012 [±0.3]	T1 +.004 [+0.1] -.000 [-0.0]	A +.000 [+0.00] -.006 [-0.15]	K ±.008 [±0.2]	L	M +.016 [+0.4] -.000 [-0.0]
10SL	.717 [18.20]	1.000 [25.40]	.126 [3.20]	.717 [18.20]	.110 [2.80]	Dimension L is dependent on the back-shell used, the cable range and the fitting used. **Consult factory.**	.717 [18.20]
14S	.906 [23.00]	1.181 [30.00]	.126 [3.20]	.969 [24.60]	.126 [3.20]		.717 [18.20]
16S	.969 [24.60]	1.280 [32.50]	.126 [3.20]	1.079 [27.40]	.126 [3.20]		.717 [18.20]
16	.969 [24.60]	1.280 [32.50]	.126 [3.20]	1.079 [27.40]	.126 [3.20]		.907 [23.05]
18	1.063 [27.00]	1.378 [35.00]	.126 [3.20]	1.213 [30.80]	.157 [4.00]		.907 [23.05]
20	1.157 [29.40]	1.496 [38.00]	.126 [3.20]	1.346 [34.20]	.157 [4.00]		.907 [23.05]
22	1.252 [31.80]	1.614 [41.00]	.126 [3.20]	1.472 [37.40]	.157 [4.00]		.907 [23.05]
24	1.374 [34.90]	1.752 [44.50]	.146 [3.70]	1.610 [40.90]	.157 [4.00]		.907 [23.05]
28	1.563 [39.70]	2.000 [50.80]	.146 [3.70]	1.839 [46.70]	.157 [4.00]		.947 [24.05]
32	1.752 [44.50]	2.244 [57.00]	.169 [4.30]	2.102 [53.40]	.157 [4.00]		.947 [24.05]
36	1.937 [49.20]	2.500 [63.50]	.169 [4.30]	2.346 [59.60]	.157 [4.00]		.947 [24.05]
40	2.185 [55.50]	2.752 [69.90]	.169 [4.30]	2.579 [65.50]	.157 [4.00]		.947 [24.05]

Dimensions are in Inches [mm]

(XX) CLAMP CODE	Z CABLE RANGE	
	OPEN	CLOSED
04C	.312 [7.92]	.094 [2.40]
06C	.438 [11.12]	.230 [5.84]
08C	.531 [13.48]	.315 [8.00]
10C	.625 [15.87]	.378 [9.60]
12C	.748 [19.00]	.445 [11.30]
16C	.937 [23.80]	.610 [15.50]
20C	1.250 [31.75]	.921 [23.40]
24C	1.378 [35.00]	.921 [23.40]
28C	1.624 [41.25]	1.177 [29.90]
32C	1.874 [47.60]	1.374 [34.90]

030FR**(PG)

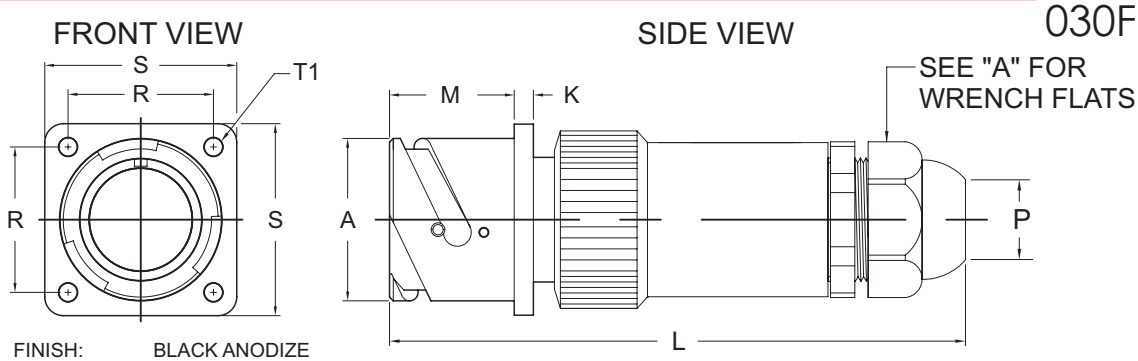

FINISH: BLACK ANODIZE
CONTACTS: F80 SILVER PLATED CRIMP CONTACTS

EXAMPLE PART NUMBER: SCPB030FR24-28P-11R

SHELL SIZE	FRONT VIEW			SIDE VIEW			
	R ±.004 [±0.1]	S ±.012 [±0.3]	T1 +.004 [+0.1] -.000 [-0.0]	A +.000 [+0.00] -.006 [-0.15]	K ±.008 [±0.2]	L	M +.016 [+0.4] -.000 [-0.0]
10SL	.717 [18.20]	1.000 [25.40]	.126 [3.20]	.717 [18.20]	.110 [2.80]	Dimension L is dependent on the back-shell used, the cable range and the fitting used. **Consult factory.**	.717 [18.20]
14S	.906 [23.00]	1.181 [30.00]	.126 [3.20]	.969 [24.60]	.126 [3.20]		.717 [18.20]
16S	.969 [24.60]	1.280 [32.50]	.126 [3.20]	1.079 [27.40]	.126 [3.20]		.717 [18.20]
16	.969 [24.60]	1.280 [32.50]	.126 [3.20]	1.079 [27.40]	.126 [3.20]		.907 [23.05]
18	1.063 [27.00]	1.378 [35.00]	.126 [3.20]	1.213 [30.80]	.157 [4.00]		.907 [23.05]
20	1.157 [29.40]	1.496 [38.00]	.126 [3.20]	1.346 [34.20]	.157 [4.00]		.907 [23.05]
22	1.252 [31.80]	1.614 [41.00]	.126 [3.20]	1.472 [37.40]	.157 [4.00]		.907 [23.05]
24	1.374 [34.90]	1.752 [44.50]	.146 [3.70]	1.610 [40.90]	.157 [4.00]		.907 [23.05]
28	1.563 [39.70]	2.000 [50.80]	.146 [3.70]	1.839 [46.70]	.157 [4.00]		.947 [24.05]
32	1.752 [44.50]	2.244 [57.00]	.169 [4.30]	2.102 [53.40]	.157 [4.00]		.947 [24.05]
36	1.937 [49.20]	2.500 [63.50]	.169 [4.30]	2.346 [59.60]	.157 [4.00]		.947 [24.05]
40	2.185 [55.50]	2.752 [69.90]	.169 [4.30]	2.579 [65.50]	.157 [4.00]		.947 [24.05]

Dimensions are in Inches [mm]

(XX) CABLE CODE NO STRAIN RELIEF	TYPE	P CABLE RANGE		A WRENCH FLATS	
07R	PG7	.08-.20	[2.0-5.0]	.591	[15.0]
07	PG7	.12-.26	[3.0-6.5]	.591	[15.0]
09R	PG9	.08-.24	[2.0-6.0]	.748	[19.0]
09	PG9	.16-.31	[4.0-8.0]	.748	[19.0]
11R	PG11	.12-.28	[3.0-7.0]	.866	[22.0]
11	PG11	.20-.39	[5.0-10.0]	.866	[22.0]
13R	PG13.5	.20-.35	[5.0-9.0]	.945	[24.0]
13	PG13.5	.24-.47	[6.0-12.0]	.945	[24.0]
16R	PG16	.28-.47	[7.0-12.0]	1.063	[27.0]
16	PG16	.39-.55	[10.0-14.0]	1.063	[27.0]
21R	PG21	.35-.63	[9.0-16.0]	1.299	[33.0]
21	PG21	.51-.71	[13.0-18.0]	1.299	[33.0]
29R	PG29	.47-.79	[12.0-20.0]	1.654	[42.0]
29	PG29	.71-.98	[18.0-25.0]	1.654	[42.0]
36R	PG36	.79-1.02	[20.0-26.0]	2.087	[53.0]
36	PG36	.87-1.26	[22.0-32.0]	2.087	[53.0]
42	PG42	1.18-1.50	[30.0-38.0]	2.362	[60.0]
48	PG48	1.34-1.73	[34.0-44.0]	2.559	[65.0]

WALL MOUNT RECEPTACLE, REAR PANEL MOUNT

030FR**(SPB)

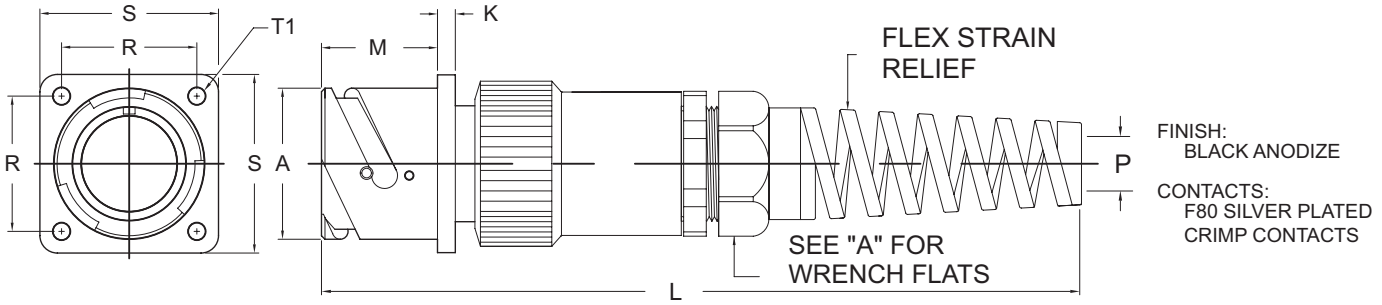

EXAMPLE PART NUMBER: SCPB030FR24-28P- SPB16R

SHELL SIZE	FRONT VIEW			SIDEVIEW			
	R ±.004 [±0.1]	S ±.012 [±0.3]	T1 +.004 [+0.1] -.000 [-0.0]	A +.000 [+0.00] -.006 [-0.15]	K ±.008 [±0.2]	L	M +.016 [+0.4] -.000 [-0.0]
10SL	.717 [18.20]	1.000 [25.40]	.126 [3.20]	.717 [18.20]	.110 [2.80]	Dimension L is dependent on the back-shell used, the cable range and the fitting used. **Consult factory.**	.717 [18.20]
14S	.906 [23.00]	1.181 [30.00]	.126 [3.20]	.969 [24.60]	.126 [3.20]		.717 [18.20]
16S	.969 [24.60]	1.280 [32.50]	.126 [3.20]	1.079 [27.40]	.126 [3.20]		.717 [18.20]
16	.969 [24.60]	1.280 [32.50]	.126 [3.20]	1.079 [27.40]	.126 [3.20]		.907 [23.05]
18	1.063 [27.00]	1.378 [35.00]	.126 [3.20]	1.213 [30.80]	.157 [4.00]		.907 [23.05]
20	1.157 [29.40]	1.496 [38.00]	.126 [3.20]	1.346 [34.20]	.157 [4.00]		.907 [23.05]
22	1.252 [31.80]	1.614 [41.00]	.126 [3.20]	1.472 [37.40]	.157 [4.00]		.907 [23.05]
24	1.374 [34.90]	1.752 [44.50]	.146 [3.70]	1.610 [40.90]	.157 [4.00]		.907 [23.05]
28	1.563 [39.70]	2.000 [50.80]	.146 [3.70]	1.839 [46.70]	.157 [4.00]		.947 [24.05]
32	1.752 [44.50]	2.244 [57.00]	.169 [4.30]	2.102 [53.40]	.157 [4.00]		.947 [24.05]
36	1.937 [49.20]	2.500 [63.50]	.169 [4.30]	2.346 [59.60]	.157 [4.00]		.947 [24.05]
40	2.185 [55.50]	2.752 [69.90]	.169 [4.30]	2.579 [65.50]	.157 [4.00]		.947 [24.05]

Dimensions are in Inches [mm]

(XX) CABLE CODE FLEX STRAIN RELIEF	TYPE	P CABLE RANGE	A WRENCH FLATS
SPB07R	PG7	.08-.20 [2.0-5.0]	0.591 [15.0]
SPB07	PG7	.12-.26 [3.0-6.5]	0.591 [15.0]
SPB09R	PG9	.08-.24 [2.0-6.0]	0.748 [19.0]
SPB09	PG9	.16-.31 [4.0-8.0]	0.748 [19.0]
SPB11R	PG11	.12-.28 [3.0-7.0]	0.866 [22.0]
SPB11	PG11	.20-.39 [5.0-10.0]	0.866 [22.0]
SPB13R	PG13.5	.20-.35 [5.0-9.0]	0.945 [24.0]
SPB13	PG13.5	.24-.47 [6.0-12.0]	0.945 [24.0]
SPB16R	PG16	.28-.47 [7.0-12.0]	1.063 [27.0]
SPB16	PG16	.39-.55 [10.0-14.0]	1.063 [27.0]
SPB21R	PG21	.35-.63 [9.0-16.0]	1.299 [33.0]
SPB21	PG21	.51-.71 [13.0-18.0]	1.299 [33.0]
SPB29R	PG29	.47-.79 [12.0-20.0]	1.654 [42.0]
SPB29	PG29	.71-.98 [18.0-25.0]	1.654 [42.0]
SPB36R	PG36	.79-1.02 [20.0-26.0]	2.087 [53.0]
SPB36	PG36	.87-1.26 [22.0-32.0]	2.087 [53.0]
SPB42	PG42	1.18-1.50 [30.0-38.0]	2.362 [60.0]
SPB48	PG48	1.34-1.73 [34.0-44.0]	2.559 [65.0]

030LA*/030LR*

MOUNTING HOLE OPTION

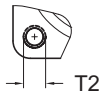

THREADED MOUNTING HOLE CODES

CODE	MOUNTING HOLE TYPE
FP	Thru holes
None	Metric thread - Standard
UN	UNC thread

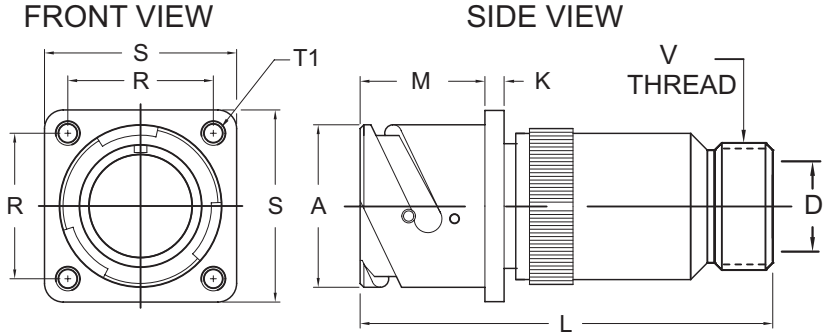

SCPB030LA* **Non-environmental, no grommet**
SCPB030LR* **Environmental with grommet**

SHELL SIZE	FRONT VIEW					SIDE VIEW					
	R ±.004 [±0.1]	S ±.012 [±0.3]	T1 +.004 [+0.1] -.000 [-0.0] STYLE FP	T2 THREAD METRIC	T2 THREAD UNC	A +.000 [+0.00] -.006 [-0.15]	D MIN.	K ±.008 [±0.2]	L APPX.	M +.016 [+0.4] -.000 [-0.0]	V THREAD CLASS 2A
10SL	.717 [18.20]	1.000 [25.40]	.126 [3.20]	M4	8-32UNC	.717 [18.20]	.323 [8.20]	.110 [2.80]	2.756 [70.00]	.717 [18.20]	5/8-24 UNEF
14S	.906 [23.00]	1.181 [30.00]	.126 [3.20]	M4	8-32UNC	.969 [24.60]	.437 [11.10]	.126 [3.20]	2.795 [71.00]	.717 [18.20]	3/4-20 UNEF
16S	.969 [24.60]	1.280 [32.50]	.126 [3.20]	M4	8-32UNC	1.079 [27.40]	.563 [14.30]	.126 [3.20]	2.795 [71.00]	.717 [18.20]	7/8-20 UNEF
16	.969 [24.60]	1.280 [32.50]	.126 [3.20]	M4	8-32UNC	1.079 [27.40]	.563 [14.30]	.126 [3.20]	3.031 [77.00]	.907 [23.05]	7/8-20 UNEF
18	1.063 [27.00]	1.378 [35.00]	.126 [3.20]	M4	8-32UNC	1.213 [30.80]	.657 [16.70]	.157 [4.00]	3.150 [80.00]	.907 [23.05]	1-20 UNEF
20	1.157 [29.40]	1.496 [38.00]	.126 [3.20]	M4	8-32UNC	1.346 [34.20]	.780 [19.80]	.157 [4.00]	3.150 [80.00]	.907 [23.05]	1 3/16-18 UNEF
22	1.252 [31.80]	1.614 [41.00]	.126 [3.20]	M4	8-32UNC	1.472 [37.40]	.780 [19.80]	.157 [4.00]	3.150 [80.00]	.907 [23.05]	1 3/16-18 UNEF
24	1.374 [34.90]	1.752 [44.50]	.146 [3.70]	M4	10-24UNC	1.610 [40.90]	1.000 [25.40]	.157 [4.00]	3.110 [79.00]	.907 [23.05]	1 7/16-18 UNEF
28	1.563 [39.70]	2.000 [50.80]	.146 [3.70]	M5	10-24UNC	1.839 [46.70]	1.063 [27.00]	.157 [4.00]	3.386 [86.00]	.947 [24.05]	1 7/16-18 UNEF
32	1.752 [44.50]	2.244 [57.00]	.169 [4.30]	M5	1/4-20UNC	2.102 [53.40]	1.280 [32.50]	.157 [4.00]	3.465 [88.00]	.947 [24.05]	1 3/4-18 UNS
36	1.937 [49.20]	2.500 [63.50]	.169 [4.30]	M5	1/4-20UNC	2.346 [59.60]	1.406 [35.70]	.157 [4.00]	3.465 [88.00]	.947 [24.05]	2-18 UNS
40	2.185 [55.50]	2.752 [69.90]	.169 [4.30]	M5	1/4-20UNC	2.579 [65.50]	1.772 [45.00]	.157 [4.00]	3.465 [88.00]	.947 [24.05]	2 1/4-16 UN

Dimensions are in Inches [mm]

SPACECRAFT COMPONENTS CORP.
3040 Clayton Street
North Las Vegas, NV 89032
Phone: 702.851.7600
Fax: 702.851.7620
Email: salesinfo@spacecraft.com
Web: www.spacecraft.com

WALL MOUNT RECEPTACLE, REAR PANEL MOUNT

030LAF*/030LF*

MOUNTING HOLE OPTION

THREADED MOUNTING HOLE CODES

CODE	MOUNTING HOLE TYPE
FP	Thru holes
None	Metric thread - Standard
UN	UNC thread

FRONT VIEW

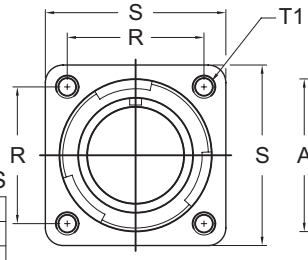

SIDE VIEW

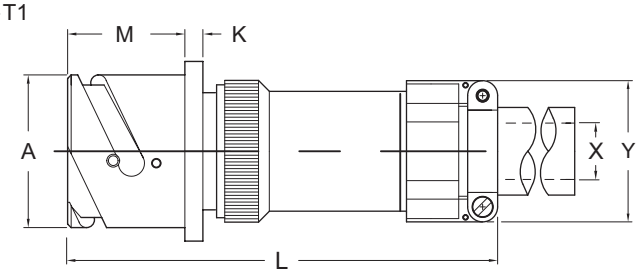

SCPB030LAF* **Non-environmental, no grommet**
SCPB030LF* **Environmental with grommet**

SHELL SIZE	FRONT VIEW					SIDE VIEW					
	R ±.004 [±0.1]	S ±.012 [±0.3]	T1 +.004 [+0.1] -.000 [-0.0] STYLE FP	T2 THREAD METRIC	T2 THREAD UNC	A +.000 [+0.00] -.006 [-0.15]	K ±.008 [±0.2]	L MAX	M +.016 [+0.4] -.000 [-0.0]	X MIN	Y MAX
10SL	.717 [18.20]	1.000 [25.40]	.126 [3.20]	M4	8-32UNC	.717 [18.20]	.110 [2.80]	3.622 [92.00]	.717 [18.20]	.220 [5.60]	.894 [22.70]
14S	.906 [23.00]	1.181 [30.00]	.126 [3.20]	M4	8-32UNC	.969 [24.60]	.126 [3.20]	3.661 [93.00]	.717 [18.20]	.311 [7.90]	1.083 [27.50]
16S	.969 [24.60]	1.280 [32.50]	.126 [3.20]	M4	8-32UNC	1.079 [27.40]	.126 [3.20]	3.740 [95.00]	.717 [18.20]	.433 [11.00]	1.181 [30.00]
16	.969 [24.60]	1.280 [32.50]	.126 [3.20]	M4	8-32UNC	1.079 [27.40]	.126 [3.20]	4.370 [111.00]	.907 [23.05]	.433 [11.00]	1.181 [30.00]
18	1.063 [27.00]	1.378 [35.00]	.126 [3.20]	M4	8-32UNC	1.213 [30.80]	.157 [4.00]	4.370 [111.00]	.907 [23.05]	.559 [14.20]	1.268 [32.20]
20	1.157 [29.40]	1.496 [38.00]	.126 [3.20]	M4	8-32UNC	1.346 [34.20]	.157 [4.00]	4.370 [111.00]	.907 [23.05]	.622 [15.80]	1.476 [37.50]
22	1.252 [31.80]	1.614 [41.00]	.126 [3.20]	M4	8-32UNC	1.472 [37.40]	.157 [4.00]	4.370 [111.00]	.907 [23.05]	.622 [15.80]	1.476 [37.50]
24	1.374 [34.90]	1.752 [44.50]	.146 [3.70]	M4	10-24UNC	1.610 [40.90]	.157 [4.00]	4.449 [113.00]	.907 [23.05]	.748 [19.00]	1.705 [43.30]
28	1.563 [39.70]	2.000 [50.80]	.146 [3.70]	M5	10-24UNC	1.839 [46.70]	.157 [4.00]	4.764 [121.00]	.947 [24.05]	.748 [19.00]	1.705 [43.30]
32	1.752 [44.50]	2.244 [57.00]	.169 [4.30]	M5	1/4-20UNC	2.102 [53.40]	.157 [4.00]	4.843 [123.00]	.947 [24.05]	.937 [23.80]	2.035 [51.70]
36	1.937 [49.20]	2.500 [63.50]	.169 [4.30]	M5	1/4-20UNC	2.346 [59.60]	.157 [4.00]	4.921 [125.00]	.947 [24.05]	1.248 [31.70]	2.283 [58.00]
40	2.185 [55.50]	2.752 [69.90]	.169 [4.30]	M5	1/4-20UNC	2.579 [65.50]	.157 [4.00]	5.433 [138.00]	.947 [24.05]	1.374 [34.90]	2.579 [65.50]

Dimensions are in Inches [mm]

030LCG*/030LC*

MOUNTING HOLE OPTIONS

THREADED

MOUNTING HOLE CODES

CODE	MOUNTING HOLE TYPE
FP	Thru holes
None	Metric thread - Standard
UN	UNC thread

FRONT VIEW

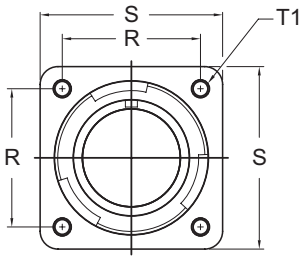

SIDE VIEW

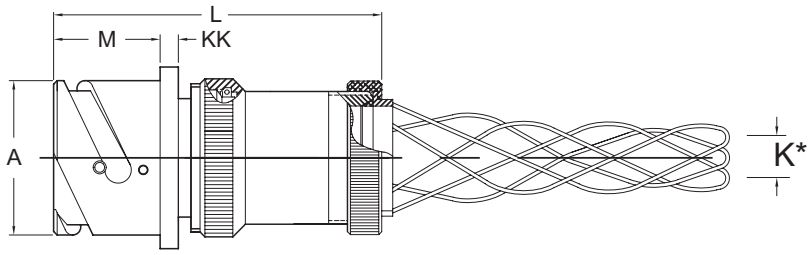

SCPB030LCG* **Environmental, no grommet**
SCPB030LC* **Environmental with grommet**

SHELL SIZE	FRONT VIEW					SIDE VIEW			
	R ±.004 [±0.1]	S ±.012 [±0.3]	T1 +.004 [+0.1] -.000 [-0.0]	T2 THREAD METRIC	T2 THREAD UNC	A +.000 [+0.00] -.006 [-0.15]	KK ±.008 [±0.2]	L1 MAX	M +.016 [+0.4] -.000 [-0.0]
10SL	.717 [18.20]	1.000 [25.40]	.126 [3.20]	M4	8-32UNC	.717 [18.20]	.110 [2.80]	3.937 [100.00]	.717 [18.20]
14S	.906 [23.00]	1.181 [30.00]	.126 [3.20]	M4	8-32UNC	.969 [24.60]	.126 [3.20]	3.937 [100.00]	.717 [18.20]
16S	.969 [24.60]	1.280 [32.50]	.126 [3.20]	M4	8-32UNC	1.079 [27.40]	.126 [3.20]	3.937 [100.00]	.717 [18.20]
16	.969 [24.60]	1.280 [32.50]	.126 [3.20]	M4	8-32UNC	1.079 [27.40]	.126 [3.20]	4.331 [110.00]	.907 [23.05]
18	1.063 [27.00]	1.378 [35.00]	.126 [3.20]	M4	8-32UNC	1.213 [30.80]	.157 [4.00]	4.331 [110.00]	.907 [23.05]
20	1.157 [29.40]	1.496 [38.00]	.126 [3.20]	M4	8-32UNC	1.346 [34.20]	.157 [4.00]	4.567 [116.00]	.907 [23.05]
22	1.252 [31.80]	1.614 [41.00]	.126 [3.20]	M4	8-32UNC	1.472 [37.40]	.157 [4.00]	4.567 [116.00]	.907 [23.05]
24	1.374 [34.90]	1.752 [44.50]	.146 [3.70]	M4	10-24UNC	1.610 [40.90]	.157 [4.00]	4.724 [120.00]	.907 [23.05]
28	1.563 [39.70]	2.000 [50.80]	.146 [3.70]	M5	10-24UNC	1.839 [46.70]	.157 [4.00]	5.079 [129.00]	.947 [24.05]
32	1.752 [44.50]	2.244 [57.00]	.169 [4.30]	M5	1/4-20UNC	2.102 [53.40]	.157 [4.00]	5.709 [145.00]	.947 [24.05]
36	1.937 [49.20]	2.500 [63.50]	.169 [4.30]	M5	1/4-20UNC	2.346 [59.60]	.157 [4.00]	5.709 [145.00]	.947 [24.05]
40	2.185 [55.50]	2.752 [69.90]	.169 [4.30]	M5	1/4-20UNC	2.579 [65.50]	.157 [4.00]	5.709 [145.00]	.947 [24.05]

K*	CABLE RANGE MIN	CABLE RANGE MAX
K0	.250 [6.35]	.375 [9.53]
K1	.375 [9.53]	.500 [12.70]
K2	.500 [12.70]	.625 [15.87]
K3	.625 [15.87]	.750 [19.05]
K4	.750 [19.05]	.875 [22.23]
K5	.875 [22.23]	1.000 [25.40]
K6	1.000 [25.40]	1.120 [28.45]
K7	1.120 [28.45]	1.250 [31.75]
K8	1.290 [32.77]	1.500 [38.10]
K9	1.560 [39.62]	1.625 [41.28]
K10	1.625 [41.28]	1.750 [44.45]

Dimensions are in Inches [mm]
1. Dimension "L" will vary from the values indicated with escalating or de-escalating backshells and some special insert configurations.

WALL MOUNT RECEPTACLE, REAR PANEL MOUNT

030LCF*/030LCFZ*

MOUNTING HOLE OPTION

THREADED

MOUNTING HOLE CODES

CODE	MOUNTING HOLE TYPE
FP	Thru holes
None	Metric thread - Standard
UN	UNC thread

FRONT VIEW

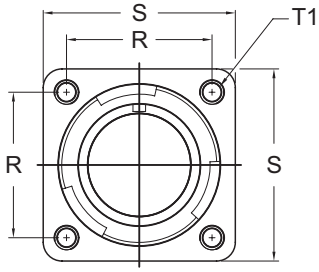

SIDE VIEW

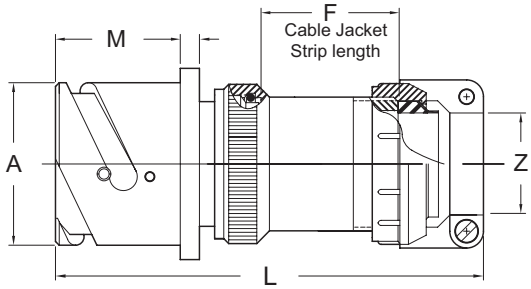

SCPB030LCF* **Environmental, no grommet**
SCPB030LCFZ* **Environmental with grommet**

SHELL SIZE	FRONT VIEW					SIDE VIEW						
	R ±.004 [±0.1]	S ±.012 [±0.3]	T1 +.004 [+0.1] -.000 [-0.0] STYLE FP	T2 THREAD METRIC	T2 THREAD UNC	A +.000 [+0.00] -.006 [-0.15]	F REF	K ±.008 [±0.2]	L MAX	M +.016 [+0.4] -.000 [-0.0]	Z OPEN	Z CLOSED
10SL	.717 [18.20]	1.000 [25.40]	.126 [3.20]	M4	8-32UNC	.717 [18.20]	1.654 [42.00]	.110 [2.80]	3.976 [101.00]	.717 [18.20]	.312 [7.93]	.094 [2.38]
14S	.906 [23.00]	1.181 [30.00]	.126 [3.20]	M4	8-32UNC	.969 [24.60]	1.677 [42.60]	.126 [3.20]	3.976 [101.00]	.717 [18.20]	.438 [11.12]	.230 [5.84]
16S	.969 [24.60]	1.280 [32.50]	.126 [3.20]	M4	8-32UNC	1.079 [27.40]	1.677 [42.60]	.126 [3.20]	4.094 [104.00]	.717 [18.20]	.531 [13.48]	.315 [8.00]
16	.969 [24.60]	1.280 [32.50]	.126 [3.20]	M4	8-32UNC	1.079 [27.40]	1.677 [42.60]	.126 [3.20]	4.488 [114.00]	.907 [23.05]	.531 [13.48]	.315 [8.00]
18	1.063 [27.00]	1.378 [35.00]	.126 [3.20]	M4	8-32UNC	1.213 [30.80]	1.803 [45.80]	.157 [4.00]	4.685 [119.00]	.907 [23.05]	.625 [15.87]	.378 [9.60]
20	1.157 [29.40]	1.496 [38.00]	.126 [3.20]	M4	8-32UNC	1.346 [34.20]	1.807 [45.90]	.157 [4.00]	4.685 [119.00]	.907 [23.05]	.748 [19.00]	.445 [11.30]
22	1.252 [31.80]	1.614 [41.00]	.126 [3.20]	M4	8-32UNC	1.472 [37.40]	1.807 [45.90]	.157 [4.00]	4.685 [119.00]	.907 [23.05]	.748 [19.00]	.445 [11.30]
24	1.374 [34.90]	1.752 [44.50]	.146 [3.70]	M4	10-24UNC	1.610 [40.90]	1.752 [44.50]	.157 [4.00]	4.882 [124.00]	.907 [23.05]	.937 [23.80]	.610 [15.50]
28	1.563 [39.70]	2.000 [50.80]	.146 [3.70]	M5	10-24UNC	1.839 [46.70]	1.949 [49.50]	.157 [4.00]	5.118 [130.00]	.947 [24.05]	.937 [23.80]	.610 [15.50]
32	1.752 [44.50]	2.244 [57.00]	.169 [4.30]	M5	1/4-20UNC	2.102 [53.40]	1.953 [49.60]	.157 [4.00]	5.394 [137.00]	.947 [24.05]	1.250 [31.75]	.921 [23.40]
36	1.937 [49.20]	2.500 [63.50]	.169 [4.30]	M5	1/4-20UNC	2.346 [59.60]	1.969 [50.00]	.157 [4.00]	5.669 [144.00]	.947 [24.05]	1.378 [35.00]	.921 [23.40]
40	2.185 [55.50]	2.752 [69.90]	.169 [4.30]	M5	1/4-20UNC	2.579 [65.50]	1.969 [50.00]	.157 [4.00]	5.669 [144.00]	.947 [24.05]	1.624 [41.25]	1.177 [29.90]

Dimensions are in Inches [mm]

030NMG*/030NM*

MOUNTING HOLE OPTION

THREADED

MOUNTING HOLE CODES

CODE	MOUNTING HOLE TYPE
FP	Thru holes
None	Metric thread - Standard
UN	UNC thread

FRONT VIEW

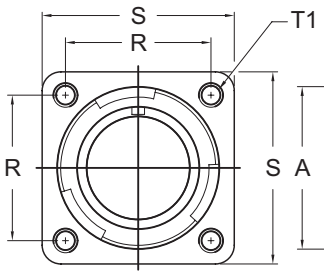

SIDE VIEW

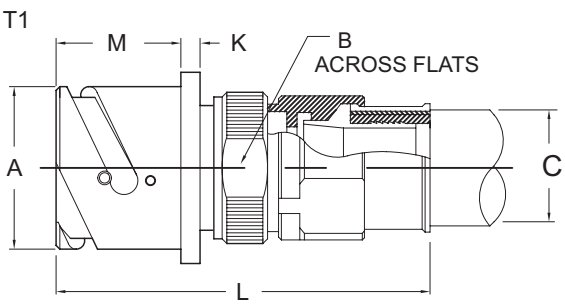

SCPB030NMG* **Environmental, no grommet**
SCPB030NM* **Environmental with grommet**

SHELL SIZE	FRONT VIEW					SIDE VIEW				
	R ±.004 [±0.1]	S ±.012 [±0.3]	T1 +.004 [+0.1] -.000 [-0.0] STYLE FP	T2 THREAD METRIC	T2 THREAD UNC	A +.000 [+0.00] -.006 [-0.15]	B ACROSS FLATS	K ±.008 [±0.2]	L	M +.016 [+0.4] -.000 [-0.0]
10SL	.717 [18.20]	1.000 [25.40]	.126 [3.20]	M4	8-32UNC	.717 [18.20]	.701 [17.80]	.110 [2.80]	Dimension L is dependent on the back-shell used, the cable range and the fitting used. **Consult factory.**	.717 [18.20]
14S	.906 [23.00]	1.181 [30.00]	.126 [3.20]	M4	8-32UNC	.969 [24.60]	.937 [23.80]	.126 [3.20]		.717 [18.20]
16S	.969 [24.60]	1.280 [32.50]	.126 [3.20]	M4	8-32UNC	1.079 [27.40]	1.000 [25.40]	.126 [3.20]		.717 [18.20]
16	.969 [24.60]	1.280 [32.50]	.126 [3.20]	M4	8-32UNC	1.079 [27.40]	1.000 [25.40]	.126 [3.20]		.907 [23.05]
18	1.063 [27.00]	1.378 [35.00]	.126 [3.20]	M4	8-32UNC	1.213 [30.80]	1.126 [28.60]	.157 [4.00]		.907 [23.05]
20	1.157 [29.40]	1.496 [38.00]	.126 [3.20]	M4	8-32UNC	1.346 [34.20]	1.248 [31.70]	.157 [4.00]		.907 [23.05]
22	1.252 [31.80]	1.614 [41.00]	.126 [3.20]	M4	8-32UNC	1.472 [37.40]	1.374 [34.90]	.157 [4.00]		.907 [23.05]
24	1.374 [34.90]	1.752 [44.50]	.146 [3.70]	M4	10-24UNC	1.610 [40.90]	1.500 [38.10]	.157 [4.00]		.907 [23.05]
28	1.563 [39.70]	2.000 [50.80]	.146 [3.70]	M5	10-24UNC	1.839 [46.70]	1.748 [44.40]	.157 [4.00]		.947 [24.05]
32	1.752 [44.50]	2.244 [57.00]	.169 [4.30]	M5	1/4-20UNC	2.102 [53.40]	2.000 [50.80]	.157 [4.00]		.947 [24.05]
36	1.937 [49.20]	2.500 [63.50]	.169 [4.30]	M5	1/4-20UNC	2.346 [59.60]	2.248 [57.10]	.157 [4.00]		.947 [24.05]
40	2.185 [55.50]	2.752 [69.90]	.169 [4.30]	M5	1/4-20UNC	2.579 [65.50]	2.437 [61.90]	.157 [4.00]		.947 [24.05]

Dimensions are in Inches [mm]

CODE (***)	AVAILABLE CONDUIT SIZES C
(038)	3/8 [9.52]
(050)	1/2 [12.70]
(075)	3/4 [19.05]
(100)	1 [25.40]
(125)	1 1/4 [31.75]
(150)	1 1/2 [38.10]
(200)	2 [50.80]

(***) Conduit Size must be specified as part of the connector part number using Conduit Code

SPACECRAFT COMPONENTS CORP.
3040 Clayton Street
North Las Vegas, NV 89032
Phone: 702.851.7600
Fax: 702.851.7620
Email: salesinfo@spacecraft.com
Web: www.spacecraft.com

WALL MOUNT RECEPTACLE, REAR PANEL MOUNT

030SL*/030SL1*

MOUNTING HOLE OPTIONS

MOUNTING HOLE CODES

CODE	MOUNTING HOLE TYPE
FP	Thru holes
None	Metric thread - Standard
UN	UNC thread

FRONT VIEW

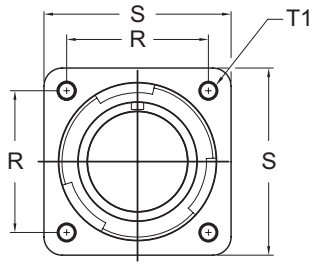

SIDE VIEW

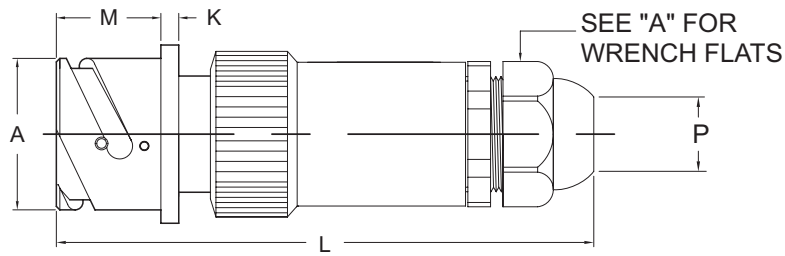

SCPB030SL* **Environmental, no grommet**
SCPB030SL1* **Environmental with grommet**

SHELL SIZE	FRONT VIEW					SIDE VIEW			
	R ±.004 [±0.1]	S ±.012 [±0.3]	T1 +.004 [+0.1] -.000 [-0.0]	T2 THREAD METRIC	T2 THREAD UNC	A +.000 [+0.00] -.006 [-0.15]	K ±.008 [±0.2]	L	M +.016 [+0.4] -.000 [-0.0]
10SL	.717 [18.20]	1.000 [25.40]	.126 [3.20]	M4	8-32UNC	.717 [18.20]	.110 [2.80]	Dimension L is dependent on the backshell used, the cable range and the fitting used. **Consult factory.**	.717 [18.20]
14S	.906 [23.00]	1.181 [30.00]	.126 [3.20]	M4	8-32UNC	.969 [24.60]	.126 [3.20]		.717 [18.20]
16S	.969 [24.60]	1.280 [32.50]	.126 [3.20]	M4	8-32UNC	1.079 [27.40]	.126 [3.20]		.717 [18.20]
16	.969 [24.60]	1.280 [32.50]	.126 [3.20]	M4	8-32UNC	1.079 [27.40]	.126 [3.20]		.907 [23.05]
18	1.063 [27.00]	1.378 [35.00]	.126 [3.20]	M4	8-32UNC	1.213 [30.80]	.157 [4.00]		.907 [23.05]
20	1.157 [29.40]	1.496 [38.00]	.126 [3.20]	M4	8-32UNC	1.346 [34.20]	.157 [4.00]		.907 [23.05]
22	1.252 [31.80]	1.614 [41.00]	.126 [3.20]	M4	8-32UNC	1.472 [37.40]	.157 [4.00]		.907 [23.05]
24	1.374 [34.90]	1.752 [44.50]	.146 [3.70]	M4	10-24UNC	1.610 [40.90]	.157 [4.00]		.907 [23.05]
28	1.563 [39.70]	2.000 [50.80]	.146 [3.70]	M5	10-24UNC	1.839 [46.70]	.157 [4.00]		.947 [24.05]
32	1.752 [44.50]	2.244 [57.00]	.169 [4.30]	M5	1/4-20UNC	2.102 [53.40]	.157 [4.00]		.947 [24.05]
36	1.937 [49.20]	2.500 [63.50]	.169 [4.30]	M5	1/4-20UNC	2.346 [59.60]	.157 [4.00]		.947 [24.05]
40	2.185 [55.50]	2.752 [69.90]	.169 [4.30]	M5	1/4-20UNC	2.579 [65.50]	.157 [4.00]		.947 [24.05]

Dimensions are in Inches [mm]

(XX) CABLE CODE NO STRAIN RELIEF	TYPE	P CABLE RANGE		A WRENCH FLATS	
07R	PG7	.08-.20	[2.0-5.0]	.591	[15.0]
07	PG7	.12-.26	[3.0-6.5]	.591	[15.0]
09R	PG9	.08-.24	[2.0-6.0]	.748	[19.0]
09	PG9	.16-.31	[4.0-8.0]	.748	[19.0]
11R	PG11	.12-.28	[3.0-7.0]	.866	[22.0]
11	PG11	.20-.39	[5.0-10.0]	.866	[22.0]
13R	PG13.5	.20-.35	[5.0-9.0]	.945	[24.0]
13	PG13.5	.24-.47	[6.0-12.0]	.945	[24.0]
16R	PG16	.28-.47	[7.0-12.0]	1.063	[27.0]
16	PG16	.39-.55	[10.0-14.0]	1.063	[27.0]
21R	PG21	.35-.63	[9.0-16.0]	1.299	[33.0]
21	PG21	.51-.71	[13.0-18.0]	1.299	[33.0]
29R	PG29	.47-.79	[12.0-20.0]	1.654	[42.0]
29	PG29	.71-.98	[18.0-25.0]	1.654	[42.0]
36R	PG36	.79-1.02	[20.0-26.0]	2.087	[53.0]
36	PG36	.87-1.26	[22.0-32.0]	2.087	[53.0]
42	PG42	1.18-1.50	[30.0-38.0]	2.362	[60.0]
48	PG48	1.34-1.73	[34.0-44.0]	2.559	[65.0]

030SLX*/030SLX1*

MOUNTING HOLE OPTIONS

MOUNTING HOLE CODES

CODE	MOUNTING HOLE TYPE
FP	Thru holes
None	Metric thread - Standard
UN	UNC thread

FRONT VIEW

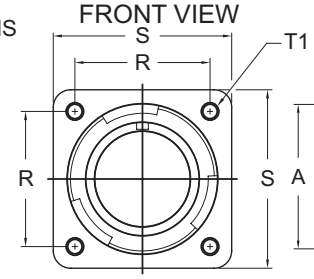

SIDE VIEW

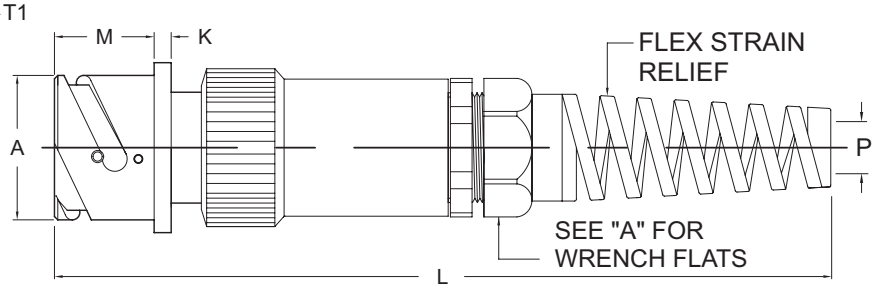

SCPB030SLX* **Environmental, no grommet**
SCPB030SLX1* **Environmental with grommet**

SHELL SIZE	FRONT VIEW					SIDE VIEW			
	R ±.004 [±0.1]	S ±.012 [±0.3]	T1 +.004 [+0.1] -.000 [-0.0]	T2 THREAD METRIC	T2 THREAD UNC	A +.000 [+0.00] -.006 [-0.15]	K ±.008 [±0.2]	L	M +.016 [+0.4] -.000 [-0.0]
10SL	.717 [18.20]	1.000 [25.40]	.126 [3.20]	M4	8-32UNC	.717 [18.20]	.110 [2.80]	Dimension L is dependent on the backshell used, the cable range and the fitting used. **Consult factory.**	.717 [18.20]
14S	.906 [23.00]	1.181 [30.00]	.126 [3.20]	M4	8-32UNC	.969 [24.60]	.126 [3.20]		.717 [18.20]
16S	.969 [24.60]	1.280 [32.50]	.126 [3.20]	M4	8-32UNC	1.079 [27.40]	.126 [3.20]		.717 [18.20]
16	.969 [24.60]	1.280 [32.50]	.126 [3.20]	M4	8-32UNC	1.079 [27.40]	.126 [3.20]		.907 [23.05]
18	1.063 [27.00]	1.378 [35.00]	.126 [3.20]	M4	8-32UNC	1.213 [30.80]	.157 [4.00]		.907 [23.05]
20	1.157 [29.40]	1.496 [38.00]	.126 [3.20]	M4	8-32UNC	1.346 [34.20]	.157 [4.00]		.907 [23.05]
22	1.252 [31.80]	1.614 [41.00]	.126 [3.20]	M4	8-32UNC	1.472 [37.40]	.157 [4.00]		.907 [23.05]
24	1.374 [34.90]	1.752 [44.50]	.146 [3.70]	M4	10-24UNC	1.610 [40.90]	.157 [4.00]		.907 [23.05]
28	1.563 [39.70]	2.000 [50.80]	.146 [3.70]	M5	10-24UNC	1.839 [46.70]	.157 [4.00]		.947 [24.05]
32	1.752 [44.50]	2.244 [57.00]	.169 [4.30]	M5	1/4-20UNC	2.102 [53.40]	.157 [4.00]		.947 [24.05]
36	1.937 [49.20]	2.500 [63.50]	.169 [4.30]	M5	1/4-20UNC	2.346 [59.60]	.157 [4.00]		.947 [24.05]
40	2.185 [55.50]	2.752 [69.90]	.169 [4.30]	M5	1/4-20UNC	2.579 [65.50]	.157 [4.00]		.947 [24.05]

Dimensions are in Inches [mm]

(XX) CABLE CODE NO STRAIN RELIEF	TYPE	P CABLE RANGE		A WRENCH FLATS	
07R	PG7	.08-.20	[2.0-5.0]	.591	[15.0]
07	PG7	.12-.26	[3.0-6.5]	.591	[15.0]
09R	PG9	.08-.24	[2.0-6.0]	.748	[19.0]
09	PG9	.16-.31	[4.0-8.0]	.748	[19.0]
11R	PG11	.12-.28	[3.0-7.0]	.866	[22.0]
11	PG11	.20-.39	[5.0-10.0]	.866	[22.0]
13R	PG13.5	.20-.35	[5.0-9.0]	.945	[24.0]
13	PG13.5	.24-.47	[6.0-12.0]	.945	[24.0]
16R	PG16	.28-.47	[7.0-12.0]	1.063	[27.0]
16	PG16	.39-.55	[10.0-14.0]	1.063	[27.0]
21R	PG21	.35-.63	[9.0-16.0]	1.299	[33.0]
21	PG21	.51-.71	[13.0-18.0]	1.299	[33.0]
29R	PG29	.47-.79	[12.0-20.0]	1.654	[42.0]
29	PG29	.71-.98	[18.0-25.0]	1.654	[42.0]
36R	PG36	.79-1.02	[20.0-26.0]	2.087	[53.0]
36	PG36	.87-1.26	[22.0-32.0]	2.087	[53.0]
42	PG42	1.18-1.50	[30.0-38.0]	2.362	[60.0]
48	PG48	1.34-1.73	[34.0-44.0]	2.559	[65.0]

WALL MOUNT RECEPTACLE, REAR PANEL MOUNT

030STG*/030ST*

MOUNTING HOLE OPTION

THREADED

MOUNTING HOLE CODES

CODE	MOUNTING HOLE TYPE
FP	Thru holes
None	Metric thread - Standard
UN	UNC thread

FRONT VIEW

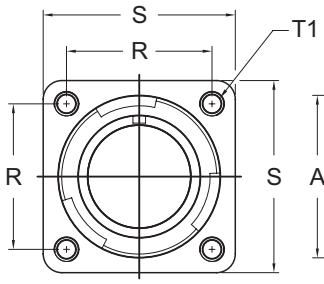

SIDE VIEW

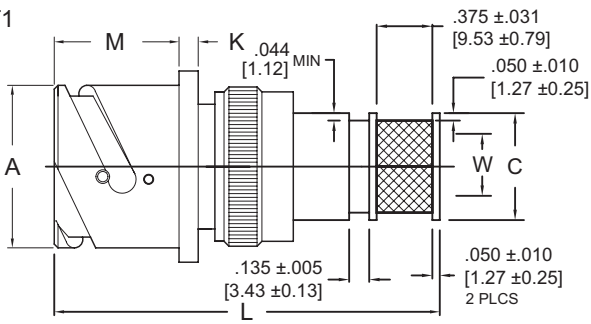

SCPB030STG* **Environmental, no grommet with spin coupling nut backshell**
SCPB030ST* **Environmental with grommet with spin coupling nut backshell**

SHELL SIZE	FRONT VIEW					SIDE VIEW					
	R ±.004 [±0.1]	S ±.012 [±0.3]	T1 +.004 [+0.1] -.000 [-0.0] STYLE FP	T2 THREAD METRIC	T2 THREAD UNC	A +.000 [+0.00] -.006 [-0.15]	C	K ±.008 [±0.2]	L MAX	M +.016 [+0.4] -.000 [-0.0]	W
10SL	.717 [18.20]	1.000 [25.40]	.126 [3.20]	M4	8-32UNC	.717 [18.20]	.500 [12.70]	.110 [2.80]	2.402 [61.00]	.717 [18.20]	.312 [7.92]
14S	.906 [23.00]	1.181 [30.00]	.126 [3.20]	M4	8-32UNC	.969 [24.60]	.630 [16.00]	.126 [3.20]	2.425 [61.60]	.717 [18.20]	.440 [11.18]
16S	.969 [24.60]	1.280 [32.50]	.126 [3.20]	M4	8-32UNC	1.079 [27.40]	.700 [17.78]	.126 [3.20]	2.402 [61.00]	.717 [18.20]	.500 [12.70]
16	.969 [24.60]	1.280 [32.50]	.126 [3.20]	M4	8-32UNC	1.079 [27.40]	.700 [17.78]	.126 [3.20]	2.626 [66.70]	.907 [23.05]	.500 [12.70]
18	1.063 [27.00]	1.378 [35.00]	.126 [3.20]	M4	8-32UNC	1.213 [30.80]	.810 [20.57]	.157 [4.00]	2.626 [66.70]	.907 [23.05]	.625 [15.87]
20	1.157 [29.40]	1.496 [38.00]	.126 [3.20]	M4	8-32UNC	1.346 [34.20]	.810 [20.57]	.157 [4.00]	2.626 [66.70]	.907 [23.05]	.625 [15.87]
22	1.252 [31.80]	1.614 [41.00]	.126 [3.20]	M4	8-32UNC	1.472 [37.40]	.870 [22.10]	.157 [4.00]	2.626 [66.70]	.907 [23.05]	.690 [17.53]
24	1.374 [34.90]	1.752 [44.50]	.146 [3.70]	M4	10-24UNC	1.610 [40.90]	.940 [23.87]	.157 [4.00]	2.701 [68.60]	.907 [23.05]	.750 [19.05]
28	1.563 [39.70]	2.000 [50.80]	.146 [3.70]	M5	10-24UNC	1.839 [46.70]	1.059 [26.90]	.157 [4.00]	2.701 [68.60]	.947 [24.05]	.875 [22.23]
32	1.752 [44.50]	2.244 [57.00]	.169 [4.30]	M5	1/4-20UNC	2.102 [53.40]	Consult Sales	.157 [4.00]	Consult Sales	.947 [24.05]	Consult Sales
36	1.937 [49.20]	2.500 [63.50]	.169 [4.30]	M5	1/4-20UNC	2.346 [59.60]		.157 [4.00]		.947 [24.05]	
40	2.185 [55.50]	2.752 [69.90]	.169 [4.30]	M5	1/4-20UNC	2.579 [65.50]		.157 [4.00]		.947 [24.05]	

Dimensions are in Inches [mm]

030SUG*/030SU*

MOUNTING HOLE OPTION

THREADED

MOUNTING HOLE CODES

CODE	MOUNTING HOLE TYPE
FP	Thru holes
None	Metric thread - Standard
UN	UNC thread

FRONT VIEW

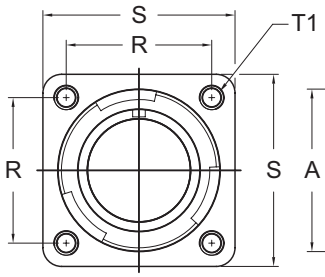

SIDE VIEW

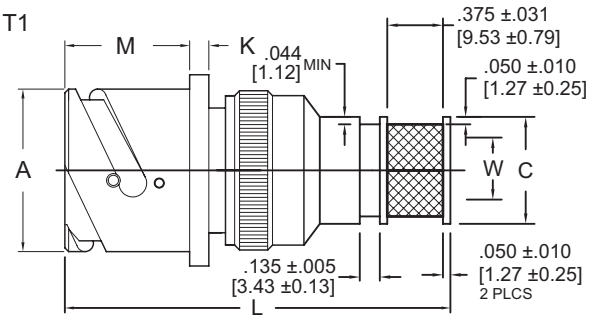

SCPB030SUG* **Environmental, no grommet with solid backshell**
SCPB030SU* **Environmental with grommet with solid backshell**

SHELL SIZE	FRONT VIEW					SIDE VIEW					
	R ±.004 [±0.1]	S ±.012 [±0.3]	T1 +.004 [+0.1] -.000 [-0.0] STYLE FP	T2 THREAD METRIC	T2 THREAD UNC	A +.000 [+0.00] -.006 [-0.15]	C ±.008 [±0.2]	K ±.008 [±0.2]	L MAX	M +.016 [+0.4] -.000 [-0.0]	W ±.005 [±0.13]
10SL	.717 [18.20]	1.000 [25.40]	.126 [3.20]	M4	8-32UNC	.717 [18.20]	.500 [12.70]	.110 [2.80]	2.402 [61.00]	.717 [18.20]	.312 [7.92]
14S	.906 [23.00]	1.181 [30.00]	.126 [3.20]	M4	8-32UNC	.969 [24.60]	.630 [16.00]	.126 [3.20]	2.425 [61.60]	.717 [18.20]	.440 [11.18]
16S	.969 [24.60]	1.280 [32.50]	.126 [3.20]	M4	8-32UNC	1.079 [27.40]	.700 [17.78]	.126 [3.20]	2.402 [61.00]	.717 [18.20]	.500 [12.70]
16	.969 [24.60]	1.280 [32.50]	.126 [3.20]	M4	8-32UNC	1.079 [27.40]	.700 [17.78]	.126 [3.20]	2.626 [66.70]	.907 [23.05]	.500 [12.70]
18	1.063 [27.00]	1.378 [35.00]	.126 [3.20]	M4	8-32UNC	1.213 [30.80]	.810 [20.57]	.157 [4.00]	2.626 [66.70]	.907 [23.05]	.625 [15.87]
20	1.157 [29.40]	1.496 [38.00]	.126 [3.20]	M4	8-32UNC	1.346 [34.20]	.810 [20.57]	.157 [4.00]	2.626 [66.70]	.907 [23.05]	.625 [15.87]
22	1.252 [31.80]	1.614 [41.00]	.126 [3.20]	M4	8-32UNC	1.472 [37.40]	.870 [22.10]	.157 [4.00]	2.626 [66.70]	.907 [23.05]	.690 [17.53]
24	1.374 [34.90]	1.752 [44.50]	.146 [3.70]	M4	10-24UNC	1.610 [40.90]	.940 [23.87]	.157 [4.00]	2.701 [68.60]	.907 [23.05]	.750 [19.05]
28	1.563 [39.70]	2.000 [50.80]	.146 [3.70]	M5	10-24UNC	1.839 [46.70]	1.059 [26.90]	.157 [4.00]	2.701 [68.60]	.947 [24.05]	.875 [22.23]
32	1.752 [44.50]	2.244 [57.00]	.169 [4.30]	M5	1/4-20UNC	2.102 [53.40]	Consult Sales	.157 [4.00]	Consult Sales	.947 [24.05]	Consult Sales
36	1.937 [49.20]	2.500 [63.50]	.169 [4.30]	M5	1/4-20UNC	2.346 [59.60]		.157 [4.00]		.947 [24.05]	
40	2.185 [55.50]	2.752 [69.90]	.169 [4.30]	M5	1/4-20UNC	2.579 [65.50]		.157 [4.00]		.947 [24.05]	

Dimensions are in Inches [mm]

SPACECRAFT COMPONENTS CORP.
3040 Clayton Street
North Las Vegas, NV 89032
Phone: 702.851.7600
Fax: 702.851.7620
Email: salesinfo@spacecraft.com
Web: www.spacecraft.com

WALL MOUNT RECEPTACLE, REAR PANEL MOUNT

030SV*

MOUNTING HOLE OPTION

THREADED

MOUNTING HOLE CODES

CODE	MOUNTING HOLE TYPE
FP	Thru holes
None	Metric thread - Standard
UN	UNC thread

FRONT VIEW

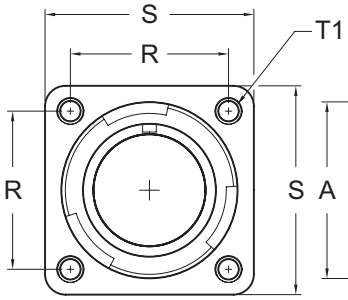

SIDE VIEW

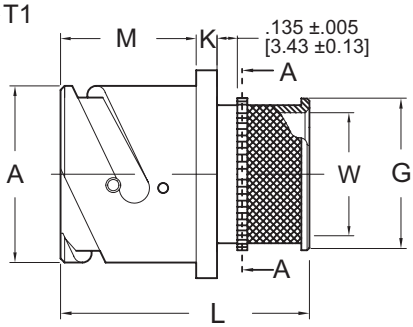

SHELL SIZES:
10SL, 14S & 16S
0.250 ±.005
[6.35 ±0.13]
FOR .125 BAND

SHELL SIZES:
16 -40
0.360 ±.005
[9.14 ±0.13]
FOR .240 BAND

SCPB030SV* Environmental, no grommet

SHELL SIZE	FRONT VIEW					SIDE VIEW							
	R ±.004 [±0.1]	S ±.012 [±0.3]	T1 +.004 [+0.1] -.000 [-0.0] STYLE FP	T2 THREAD METRIC	T2 THREAD UNC	A +.000 [+0.00] -.006 [-0.15]	G MAX	K ±.008 [±0.2]	L MAX	M +.016 [+0.4] -.000 [-0.0]	W MIN	X ±.016 [±0.4] .240 BAND	X ±.016 [±0.4] .120 BAND
10SL	.717 [18.20]	1.000 [25.40]	.126 [3.20]	M4	8-32UNC	.717 [18.20]	.634 [16.10]	.110 [2.80]	1.320 [33.53]	.717 [18.20]	.476 [12.10]	–	.228 [5.80]
14S	.906 [23.00]	1.181 [30.00]	.126 [3.20]	M4	8-32UNC	.969 [24.60]	.756 [19.20]	.126 [3.20]	1.320 [33.53]	.717 [18.20]	.606 [15.40]	–	.228 [5.80]
16S	.969 [24.60]	1.280 [32.50]	.126 [3.20]	M4	8-32UNC	1.079 [27.40]	.882 [22.40]	.126 [3.20]	1.320 [33.53]	.717 [18.20]	.736 [18.70]	–	.228 [5.80]
16	.969 [24.60]	1.280 [32.50]	.126 [3.20]	M4	8-32UNC	1.079 [27.40]	.882 [22.40]	.126 [3.20]	1.685 [42.80]	.907 [23.05]	.736 [18.70]	.146 [3.70]	–
18	1.063 [27.00]	1.378 [35.00]	.126 [3.20]	M4	8-32UNC	1.213 [30.80]	1.004 [25.50]	.157 [4.00]	1.685 [42.80]	.907 [23.05]	.862 [21.90]	.146 [3.70]	–
20	1.157 [29.40]	1.496 [38.00]	.126 [3.20]	M4	8-32UNC	1.346 [34.20]	1.130 [28.70]	.157 [4.00]	1.685 [42.80]	.907 [23.05]	.976 [24.80]	.146 [3.70]	–
22	1.252 [31.80]	1.614 [41.00]	.126 [3.20]	M4	8-32UNC	1.472 [37.40]	1.256 [31.90]	.157 [4.00]	1.685 [42.80]	.907 [23.05]	1.106 [28.10]	.146 [3.70]	–
24	1.374 [34.90]	1.752 [44.50]	.146 [3.70]	M4	10-24UNC	1.610 [40.90]	1.382 [35.10]	.157 [4.00]	1.685 [42.80]	.907 [23.05]	1.228 [31.20]	.146 [3.70]	–
28	1.563 [39.70]	2.000 [50.80]	.146 [3.70]	M5	10-24UNC	1.839 [46.70]	1.630 [41.40]	.157 [4.00]	1.725 [43.82]	.947 [24.05]	1.413 [35.90]	.185 [4.70]	–
32	1.752 [44.50]	2.244 [57.00]	.169 [4.30]	M5	1/4-20UNC	2.102 [53.40]	1.882 [47.80]	.157 [4.00]	1.725 [43.82]	.947 [24.05]	1.697 [43.10]	.185 [4.70]	–
36	1.937 [49.20]	2.500 [63.50]	.169 [4.30]	M5	1/4-20UNC	2.346 [59.60]	2.067 [52.50]	.157 [4.00]	1.725 [43.82]	.947 [24.05]	1.890 [48.00]	.185 [4.70]	–
40	2.185 [55.50]	2.752 [69.90]	.169 [4.30]	M5	1/4-20UNC	2.579 [65.50]	2.319 [58.90]	.157 [4.00]	1.725 [43.82]	.947 [24.05]	2.118 [53.80]	.185 [4.70]	–

Dimensions are in Inches [mm]

030TRAC*

MOUNTING HOLE OPTIONS

THREADED

MOUNTING HOLE CODES

CODE	MOUNTING HOLE TYPE
FP	Thru holes
None	Metric thread - Standard
UN	UNC thread

FRONT VIEW

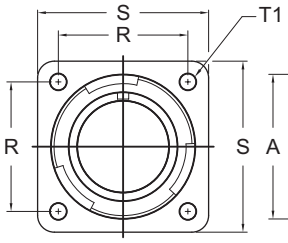

SIDE VIEW

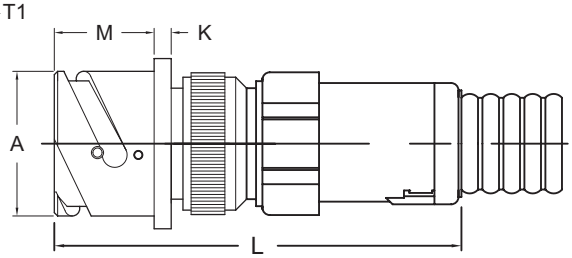

SCPB030TRAC* Environmental with grommet

SHELL SIZE	FRONT VIEW					SIDE VIEW			
	R ±.004 [±0.1]	S ±.012 [±0.3]	T1 +.004 [+0.1] -.000 [-0.0]	T2 THREAD METRIC	T2 THREAD UNC	A +.000 [+0.00] -.006 [-0.15]	K ±.008 [±0.2]	L	M +.016 [+0.4] -.000 [-0.0]
10SL	.717 [18.20]	1.000 [25.40]	.126 [3.20]	M4	8-32UNC	.717 [18.20]	.110 [2.80]	Dimension L is dependent on the back-shell used, the cable range and the fitting used. **Consult factory.**	.717 [18.20]
14S	.906 [23.00]	1.181 [30.00]	.126 [3.20]	M4	8-32UNC	.969 [24.60]	.126 [3.20]		.717 [18.20]
16S	.969 [24.60]	1.280 [32.50]	.126 [3.20]	M4	8-32UNC	1.079 [27.40]	.126 [3.20]		.717 [18.20]
16	.969 [24.60]	1.280 [32.50]	.126 [3.20]	M4	8-32UNC	1.079 [27.40]	.126 [3.20]		.907 [23.05]
18	1.063 [27.00]	1.378 [35.00]	.126 [3.20]	M4	8-32UNC	1.213 [30.80]	.157 [4.00]		.907 [23.05]
20	1.157 [29.40]	1.496 [38.00]	.126 [3.20]	M4	8-32UNC	1.346 [34.20]	.157 [4.00]		.907 [23.05]
22	1.252 [31.80]	1.614 [41.00]	.126 [3.20]	M4	8-32UNC	1.472 [37.40]	.157 [4.00]		.907 [23.05]
24	1.374 [34.90]	1.752 [44.50]	.146 [3.70]	M4	10-24UNC	1.610 [40.90]	.157 [4.00]		.907 [23.05]
28	1.563 [39.70]	2.000 [50.80]	.146 [3.70]	M5	10-24UNC	1.839 [46.70]	.157 [4.00]		.947 [24.05]
32	1.752 [44.50]	2.244 [57.00]	.169 [4.30]	M5	1/4-20UNC	2.102 [53.40]	.157 [4.00]		.947 [24.05]
36	1.937 [49.20]	2.500 [63.50]	.169 [4.30]	M5	1/4-20UNC	2.346 [59.60]	.157 [4.00]		.947 [24.05]
40	2.185 [55.50]	2.752 [69.90]	.169 [4.30]	M5	1/4-20UNC	2.579 [65.50]	.157 [4.00]		.947 [24.05]

Dimensions are in Inches [mm]

WALL MOUNT RECEPTACLE, REAR PANEL MOUNT

030WK*/030WKG*

MOUNTING HOLE OPTIONS

THREADED

FRONT VIEW

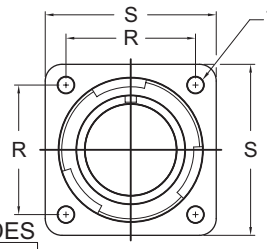

SIDE VIEW

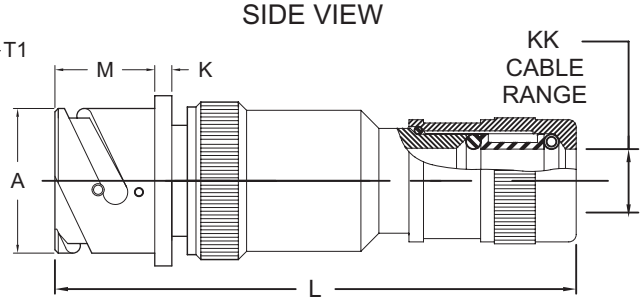

MOUNTING HOLE CODES

CODE	MOUNTING HOLE TYPE
FP	Thru holes
None	Metric thread - Standard
UN	UNC thread

SCPB030WK* **Environmental with grommet**
SCPB030WKG* **Environmental, no grommet**

SHELL SIZE	FRONT VIEW					SIDE VIEW			
	R ±.004 [±0.1]	S ±.012 [±0.3]	T1 +.004 [+0.1] -.000 [-0.0]	T2 THREAD METRIC	T2 THREAD UNC	A +.000 [+0.00] -.006 [-0.15]	K ±.008 [±0.2]	L MAX	M +.016 [+0.4] -.000 [-0.0]
10SL	.717 [18.20]	1.000 [25.40]	.126 [3.20]	M4	8-32UNC	.717 [18.20]	.110 [2.80]	4.370 [111.00]	.717 [18.20]
14S	.906 [23.00]	1.181 [30.00]	.126 [3.20]	M4	8-32UNC	.969 [24.60]	.126 [3.20]	4.409 [112.00]	.717 [18.20]
16S	.969 [24.60]	1.280 [32.50]	.126 [3.20]	M4	8-32UNC	1.079 [27.40]	.126 [3.20]	3.937 [100.00]	.717 [18.20]
16	.969 [24.60]	1.280 [32.50]	.126 [3.20]	M4	8-32UNC	1.079 [27.40]	.126 [3.20]	4.331 [110.00]	.907 [23.05]
18	1.063 [27.00]	1.378 [35.00]	.126 [3.20]	M4	8-32UNC	1.213 [30.80]	.157 [4.00]	5.000 [127.00]	.907 [23.05]
20	1.157 [29.40]	1.496 [38.00]	.126 [3.20]	M4	8-32UNC	1.346 [34.20]	.157 [4.00]	5.000 [127.00]	.907 [23.05]
22	1.252 [31.80]	1.614 [41.00]	.126 [3.20]	M4	8-32UNC	1.472 [37.40]	.157 [4.00]	5.236 [133.00]	.907 [23.05]
24	1.374 [34.90]	1.752 [44.50]	.146 [3.70]	M4	10-24UNC	1.610 [40.90]	.157 [4.00]	5.276 [134.00]	.907 [23.05]
28	1.563 [39.70]	2.000 [50.80]	.146 [3.70]	M5	10-24UNC	1.839 [46.70]	.157 [4.00]	5.276 [134.00]	.947 [24.05]
32	1.752 [44.50]	2.244 [57.00]	.169 [4.30]	M5	1/4-20UNC	2.102 [53.40]	.157 [4.00]	5.354 [136.00]	.947 [24.05]
36	1.937 [49.20]	2.500 [63.50]	.169 [4.30]	M5	1/4-20UNC	2.346 [59.60]	.157 [4.00]	5.354 [136.00]	.947 [24.05]
40	2.185 [55.50]	2.752 [69.90]	.169 [4.30]	M5	1/4-20UNC	2.579 [65.50]	.157 [4.00]	5.354 [136.00]	.947 [24.05]

Dimensions are in Inches [mm]
1. Dimension "L" will vary from the values indicated with escalating or de-escalating backshells and some special insert configurations.

(**) CABLE RANGE CODE	KK MIN	KK MAX
01	.063 [1.59]	.125 [3.18]
02	.125 [3.18]	.250 [6.35]
03	.250 [6.35]	.375 [9.53]
04	.375 [9.53]	.500 [12.70]
05	.500 [12.70]	.625 [15.88]
06	.625 [15.88]	.750 [19.05]
07	.750 [19.05]	.875 [22.23]
08	.875 [22.23]	1.000 [25.40]
09	1.000 [25.40]	1.125 [28.58]
10	1.125 [28.58]	1.250 [31.75]
11	1.250 [31.75]	1.375 [34.93]
12	1.375 [34.93]	1.500 [38.10]
13	1.500 [38.10]	1.623 [41.23]
14	1.623 [41.23]	1.750 [44.45]
15	1.750 [44.45]	1.875 [47.63]
16	1.875 [47.63]	2.000 [50.80]

(**) Cable Range must be specified as part of the connector part number using Cable Range Code.

030YM*

MOUNTING HOLE OPTION

THREADED

MOUNTING HOLE CODES

CODE	MOUNTING HOLE TYPE
FP	Thru holes
None	Metric thread - Standard
UN	UNC thread

FRONT VIEW

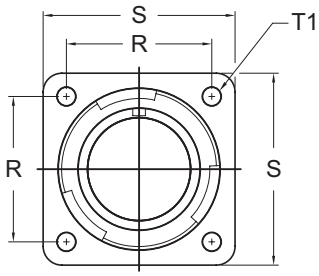

SIDE VIEW

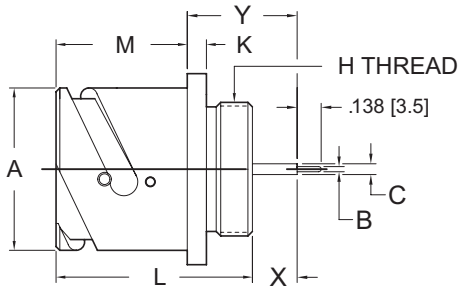

AVAILABLE CONTACT	B +0.00 [+0.0] -.002 [-0.05]	C +0.00 [+0.0] -.004 [-0.10]
SIZE 16S & 16	0.030 [0.75]	0.063 [1.6]
SIZE 12	0.071 [1.80]	0.134 [3.4]

Connectors are available only with contact sizes 16S, 16 and 12. For different contact sizes please consult factory.

SCPB030YM* Environmental with PC tail contacts

SHELL SIZE	FRONT VIEW					SIDE VIEW											
	R ±.004 [±0.1]	S ±.012 [±0.3]	T1 +.004 [+0.1] -.000 [-0.0]	T2 THREAD METRIC	T2 THREAD UNC	A +.000 [+0.00] -.006 [-0.15]	K ±.008 [±0.2]	L ±.012 [±0.3]	M +.016 [+0.4] -.000 [-0.0]	H THREAD CLASS 2A	TYPE YM X*	TYPE YM Y*	TYPE YM1 X*	TYPE YM1 Y*	TYPE YM2 X*	TYPE YM2 Y*	TYPE YM3 X*	TYPE YM3 Y*
10SL	.717 [18.20]	1.000 [25.40]	.126 [3.20]	M4	8-32UNC	.717 [18.20]	.110 [2.80]	1.087 [27.60]	.717 [18.20]	5/8-24UNEF	***.197 [5.00]***	***.567 [14.40]***	***.260 [6.60]***	***.630 [16.00]***	***.134 [3.40]***	***.504 [12.80]***	***.071 [1.80]***	***.441 [11.20]***
14S	.906 [23.00]	1.181 [30.00]	.126 [3.20]	M4	8-32UNC	.969 [24.60]	.126 [3.20]	1.087 [27.60]	.717 [18.20]	3/4-20UNEF	***.197 [5.00]***	***.567 [14.40]***	***.260 [6.60]***	***.630 [16.00]***	***.134 [3.40]***	***.504 [12.80]***	***.071 [1.80]***	***.441 [11.20]***
16S	.969 [24.60]	1.280 [32.50]	.126 [3.20]	M4	8-32UNC	1.079 [27.40]	.126 [3.20]	1.087 [27.60]	.717 [18.20]	7/8-20UNEF	***.197 [5.00]***	***.567 [14.40]***	***.260 [6.60]***	***.630 [16.00]***	***.134 [3.40]***	***.504 [12.80]***	***.071 [1.80]***	***.441 [11.20]***
16	.969 [24.60]	1.280 [32.50]	.126 [3.20]	M4	8-32UNC	1.079 [27.40]	.126 [3.20]	1.331 [33.80]	.907 [23.05]	7/8-20UNEF	.197 [5.00]	.622 [15.80]	.260 [6.60]	.685 [17.40]	***.134 [3.40]***	***.559 [14.20]***	***.071 [1.80]***	***.496 [12.60]***
18	1.063 [27.00]	1.378 [35.00]	.126 [3.20]	M4	8-32UNC	1.213 [30.80]	.157 [4.00]	1.331 [33.80]	.907 [23.05]	1-20UNEF	.197 [5.00]	.622 [15.80]	.260 [6.60]	.685 [17.40]	***.134 [3.40]***	***.559 [14.20]***	***.071 [1.80]***	***.496 [12.60]***
20	1.157 [29.40]	1.496 [38.00]	.126 [3.20]	M4	8-32UNC	1.346 [34.20]	.157 [4.00]	1.331 [33.80]	.907 [23.05]	1 1/8-18UNEF	.197 [5.00]	.622 [15.80]	.260 [6.60]	.685 [17.40]	***.134 [3.40]***	***.559 [14.20]***	***.071 [1.80]***	***.496 [12.60]***
22	1.252 [31.80]	1.614 [41.00]	.126 [3.20]	M4	8-32UNC	1.472 [37.40]	.157 [4.00]	1.331 [33.80]	.907 [23.05]	1 1/4-18UNEF	.197 [5.00]	.622 [15.80]	.260 [6.60]	.685 [17.40]	***.134 [3.40]***	***.559 [14.20]***	***.071 [1.80]***	***.496 [12.60]***
24	1.374 [34.90]	1.752 [44.50]	.146 [3.70]	M4	10-24UNC	1.610 [40.90]	.157 [4.00]	1.409 [35.80]	.907 [23.05]	1 3/8-18UNEF	.197 [5.00]	.701 [17.80]	.260 [6.60]	.764 [19.40]	***.134 [3.40]***	***.638 [16.20]***	***.071 [1.80]***	***.575 [14.60]***
28	1.563 [39.70]	2.000 [50.80]	.146 [3.70]	M5	10-24UNC	1.839 [46.70]	.157 [4.00]	1.409 [35.80]	.947 [24.05]	1 5/8-18UNEF	.197 [5.00]	.657 [16.70]	.260 [6.60]	.720 [18.30]	.134 [3.40]	.594 [15.10]	***.071 [1.80]***	***.531 [13.50]***
32	1.752 [44.50]	2.244 [57.00]	.169 [4.30]	M5	1/4-20UNC	2.102 [53.40]	.157 [4.00]	1.469 [37.30]	.947 [24.05]	1 7/8-16UN	***.197 [5.00]***	***.720 [18.30]***	***.260 [6.60]***	***.783 [19.90]***	.134 [3.40]	.657 [16.70]	.071 [1.80]	.594 [15.10]
36	1.937 [49.20]	2.500 [63.50]	.169 [4.30]	M5	1/4-20UNC	2.346 [59.60]	.157 [4.00]	1.469 [37.30]	.947 [24.05]	2 1/16-16UN	***.197 [5.00]***	***.720 [18.30]***	***.260 [6.60]***	***.783 [19.90]***	.134 [3.40]	.657 [16.70]	.071 [1.80]	.594 [15.10]
40	2.185 [55.50]	2.752 [69.90]	.169 [4.30]	M5	1/4-20UNC	2.579 [65.50]	.157 [4.00]	1.469 [37.30]	.947 [24.05]	2 5/16-16UNS	***.197 [5.00]***	***.720 [18.30]***	***.260 [6.60]***	***.783 [19.90]***	.134 [3.40]	.657 [16.70]	.071 [1.80]	.594 [15.10]

Dimensions are in Inches [mm]
* ±.020

CONSULT FACTORY

SPACECRAFT COMPONENTS CORP.
3040 Clayton Street
North Las Vegas, NV 89032
Phone: 702.851.7600
Fax: 702.851.7620
Email: salesinfo@spacecraft.com
Web: www.spacecraft.com

WALL MOUNT RECEPTACLE, REAR PANEL MOUNT

038A*/038R*

MOUNTING HOLE OPTION

THREADED

MOUNTING HOLE CODES

CODE	MOUNTING HOLE TYPE
FP	Thru holes
None	Metric thread - Standard
UN	UNC thread

FRONT VIEW

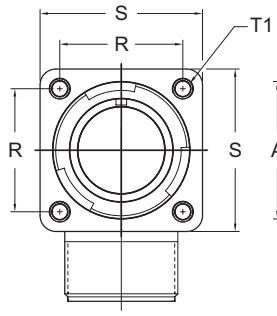

SIDE VIEW

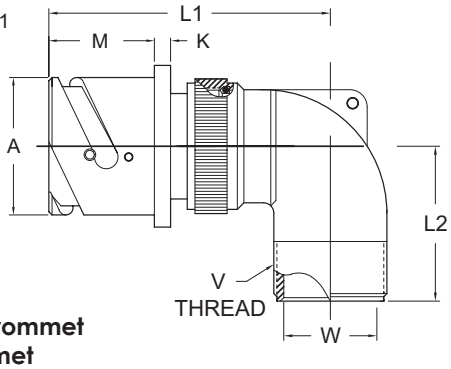

SCPB038A* **Non-environmental, no grommet**
SCPB038R* **Environmental with grommet**

SHELL SIZE	FRONT VIEW					SIDE VIEW						
	R ±.004 [±0.1]	S ±.012 [±0.3]	T1 +.004 [+0.1] -.000 [-0.0] STYLE FP	T2 THREAD METRIC	T2 THREAD UNC	A +.000 [+0.00] -.006 [-0.15]	K ±.008 [±0.2]	L1 MAX	L2 MAX	M +.016 [+0.4] -.000 [-0.0]	V THREAD CLASS 2A	W MIN
10SL	.717 [18.20]	1.000 [25.40]	.126 [3.20]	M4	8-32UNC	.717 [18.20]	.110 [2.80]	1.772 [45.00]	1.181 [30.00]	.717 [18.20]	5/8-24 UNEF	.335 [8.50]
14S	.906 [23.00]	1.181 [30.00]	.126 [3.20]	M4	8-32UNC	.969 [24.60]	.126 [3.20]	1.850 [47.00]	1.181 [30.00]	.717 [18.20]	3/4-20 UNEF	.472 [12.00]
16S	.969 [24.60]	1.280 [32.50]	.126 [3.20]	M4	8-32UNC	1.079 [27.40]	.126 [3.20]	1.890 [48.00]	1.181 [30.00]	.717 [18.20]	7/8-20 UNEF	.571 [14.50]
16	.969 [24.60]	1.280 [32.50]	.126 [3.20]	M4	8-32UNC	1.079 [27.40]	.126 [3.20]	2.244 [57.00]	1.181 [30.00]	.907 [23.05]	7/8-20 UNEF	.571 [14.50]
18	1.063 [27.00]	1.378 [35.00]	.126 [3.20]	M4	8-32UNC	1.213 [30.80]	.157 [4.00]	2.283 [58.00]	1.378 [35.00]	.907 [23.05]	1-20 UNEF	.689 [17.50]
20	1.157 [29.40]	1.496 [38.00]	.126 [3.20]	M4	8-32UNC	1.346 [34.20]	.157 [4.00]	2.402 [61.00]	1.378 [35.00]	.907 [23.05]	1 3/16-18 UNEF	.768 [19.50]
22	1.252 [31.80]	1.614 [41.00]	.126 [3.20]	M4	8-32UNC	1.472 [37.40]	.157 [4.00]	2.402 [61.00]	1.378 [35.00]	.907 [23.05]	1 3/16-18 UNEF	.866 [22.00]
24	1.374 [34.90]	1.752 [44.50]	.146 [3.70]	M4	10-24UNC	1.610 [40.90]	.157 [4.00]	2.598 [66.00]	1.575 [40.00]	.907 [23.05]	1 7/16-18 UNEF	.984 [25.00]
28	1.563 [39.70]	2.000 [50.80]	.146 [3.70]	M5	10-24UNC	1.839 [46.70]	.157 [4.00]	2.598 [66.00]	1.575 [40.00]	.947 [24.05]	1 7/16-18 UNEF	1.142 [29.00]
32	1.752 [44.50]	2.244 [57.00]	.169 [4.30]	M5	1/4-20UNC	2.102 [53.40]	.157 [4.00]	2.835 [72.00]	1.772 [45.00]	.947 [24.05]	1 3/4-18 UNS	1.339 [34.00]
36	1.937 [49.20]	2.500 [63.50]	.169 [4.30]	M5	1/4-20UNC	2.346 [59.60]	.157 [4.00]	2.953 [75.00]	1.969 [50.00]	.947 [24.05]	2-18 UNS	1.516 [38.50]
40	2.185 [55.50]	2.752 [69.90]	.169 [4.30]	M5	1/4-20UNC	2.579 [65.50]	.157 [4.00]	3.071 [78.00]	2.165 [55.00]	.947 [24.05]	2 1/4-16 UN	1.890 [48.00]

Dimensions are in Inches [mm]

038AF*/038F*

MOUNTING HOLE OPTION

THREADED

MOUNTING HOLE CODES

CODE	MOUNTING HOLE TYPE
FP	Thru holes
None	Metric thread - Standard
UN	UNC thread

FRONT VIEW

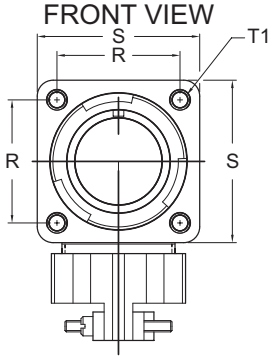

SIDE VIEW

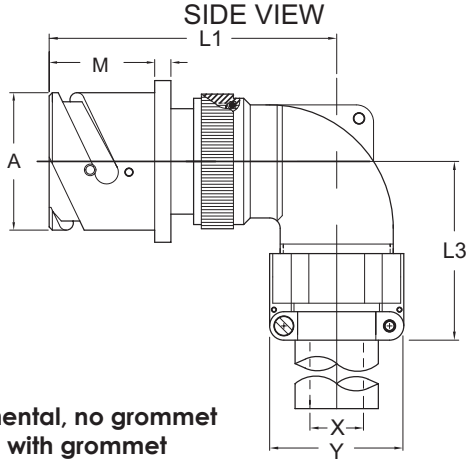

SCPB038AF* **Non-environmental, no grommet**
SCPB038F* **Environmental with grommet**

SHELL SIZE	FRONT VIEW					SIDE VIEW						
	R ±.004 [±0.1]	S ±.012 [±0.3]	T1 +.004 [+0.1] -.000 [-0.0] STYLE FP	T2 THREAD METRIC	T2 THREAD UNC	A +.000 [+0.00] -.006 [-0.15]	K ±.008 [±0.2]	L1 MAX	L3 MAX	M +.016 [+0.4] -.000 [-0.0]	X MIN	Y MAX
10SL	.717 [18.20]	1.000 [25.40]	.126 [3.20]	M4	8-32UNC	.717 [18.20]	.110 [2.80]	1.772 [45.00]	1.654 [42.00]	.717 [18.20]	.256 [6.50]	.894 [22.70]
14S	.906 [23.00]	1.181 [30.00]	.126 [3.20]	M4	8-32UNC	.969 [24.60]	.126 [3.20]	1.850 [47.00]	1.654 [42.00]	.717 [18.20]	.354 [9.00]	1.083 [27.50]
16S	.969 [24.60]	1.280 [32.50]	.126 [3.20]	M4	8-32UNC	1.079 [27.40]	.126 [3.20]	1.890 [48.00]	1.772 [45.00]	.717 [18.20]	.433 [11.00]	1.181 [30.00]
16	.969 [24.60]	1.280 [32.50]	.126 [3.20]	M4	8-32UNC	1.079 [27.40]	.126 [3.20]	2.244 [57.00]	1.772 [45.00]	.907 [23.05]	.433 [11.00]	1.181 [30.00]
18	1.063 [27.00]	1.378 [35.00]	.126 [3.20]	M4	8-32UNC	1.213 [30.80]	.157 [4.00]	2.283 [58.00]	2.087 [53.00]	.907 [23.05]	.559 [14.20]	1.268 [32.20]
20	1.157 [29.40]	1.496 [38.00]	.126 [3.20]	M4	8-32UNC	1.346 [34.20]	.157 [4.00]	2.402 [61.00]	2.087 [53.00]	.907 [23.05]	.622 [15.80]	1.476 [37.50]
22	1.252 [31.80]	1.614 [41.00]	.126 [3.20]	M4	8-32UNC	1.472 [37.40]	.157 [4.00]	2.402 [61.00]	2.087 [53.00]	.907 [23.05]	.622 [15.80]	1.476 [37.50]
24	1.374 [34.90]	1.752 [44.50]	.146 [3.70]	M4	10-24UNC	1.610 [40.90]	.157 [4.00]	2.598 [66.00]	2.283 [58.00]	.907 [23.05]	.843 [21.40]	1.705 [43.30]
28	1.563 [39.70]	2.000 [50.80]	.146 [3.70]	M5	10-24UNC	1.839 [46.70]	.157 [4.00]	2.598 [66.00]	2.283 [58.00]	.947 [24.05]	.843 [21.40]	1.705 [43.30]
32	1.752 [44.50]	2.244 [57.00]	.169 [4.30]	M5	1/4-20UNC	2.102 [53.40]	.157 [4.00]	2.835 [72.00]	2.598 [66.00]	.947 [24.05]	1.051 [26.70]	2.035 [51.70]
36	1.937 [49.20]	2.500 [63.50]	.169 [4.30]	M5	1/4-20UNC	2.346 [59.60]	.157 [4.00]	2.953 [75.00]	2.717 [69.00]	.947 [24.05]	1.248 [31.70]	2.283 [58.00]
40	2.185 [55.50]	2.752 [69.90]	.169 [4.30]	M5	1/4-20UNC	2.579 [65.50]	.157 [4.00]	3.071 [78.00]	3.740 [95.00]	.947 [24.05]	1.374 [34.90]	2.579 [65.50]

Dimensions are in Inches [mm]

WALL MOUNT RECEPTACLE, REAR PANEL MOUNT

038CF*/038CFZ*

MOUNTING HOLE OPTION

THREADED

MOUNTING HOLE CODES

CODE	MOUNTING HOLE TYPE
FP	Thru holes
None	Metric thread - Standard
UN	UNC thread

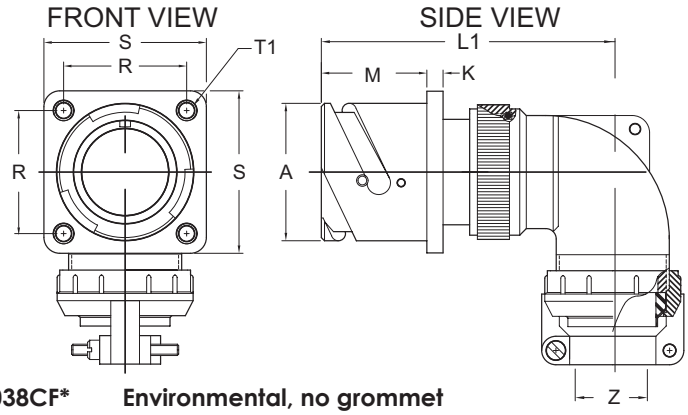

SCPB038CF* **Environmental, no grommet**
SCPB038CFZ* **Environmental with grommet**

SHELL SIZE	FRONT VIEW					SIDE VIEW					
	R ±.004 [±0.1]	S ±.012 [±0.3]	T1 +.004 [+0.1] -.000 [-0.0] STYLE FP	T2 THREAD METRIC	T2 THREAD UNC	A +.000 [+0.00] -.006 [-0.15]	K ±.008 [±0.2]	L1 MAX	M +.016 [+0.4] -.000 [-0.0]	Z OPEN	Z CLOSED
10SL	.717 [18.20]	1.000 [25.40]	.126 [3.20]	M4	8-32UNC	.717 [18.20]	.110 [2.80]	1.772 [45.00]	.717 [18.20]	.312 [7.93]	.094 [2.38]
14S	.906 [23.00]	1.181 [30.00]	.126 [3.20]	M4	8-32UNC	.969 [24.60]	.126 [3.20]	1.850 [47.00]	.717 [18.20]	.438 [11.12]	.230 [5.84]
16S	.969 [24.60]	1.280 [32.50]	.126 [3.20]	M4	8-32UNC	1.079 [27.40]	.126 [3.20]	1.890 [48.00]	.717 [18.20]	.531 [13.48]	.315 [8.00]
16	.969 [24.60]	1.280 [32.50]	.126 [3.20]	M4	8-32UNC	1.079 [27.40]	.126 [3.20]	2.244 [57.00]	.907 [23.05]	.531 [13.48]	.315 [8.00]
18	1.063 [27.00]	1.378 [35.00]	.126 [3.20]	M4	8-32UNC	1.213 [30.80]	.157 [4.00]	2.283 [58.00]	.907 [23.05]	.625 [15.87]	.378 [9.60]
20	1.157 [29.40]	1.496 [38.00]	.126 [3.20]	M4	8-32UNC	1.346 [34.20]	.157 [4.00]	2.402 [61.00]	.907 [23.05]	.748 [19.00]	.445 [11.30]
22	1.252 [31.80]	1.614 [41.00]	.126 [3.20]	M4	8-32UNC	1.472 [37.40]	.157 [4.00]	2.402 [61.00]	.907 [23.05]	.748 [19.00]	.445 [11.30]
24	1.374 [34.90]	1.752 [44.50]	.146 [3.70]	M4	10-24UNC	1.610 [40.90]	.157 [4.00]	2.598 [66.00]	.907 [23.05]	.937 [23.80]	.610 [15.50]
28	1.563 [39.70]	2.000 [50.80]	.146 [3.70]	M5	10-24UNC	1.839 [46.70]	.157 [4.00]	2.598 [66.00]	.947 [24.05]	.937 [23.80]	.610 [15.50]
32	1.752 [44.50]	2.244 [57.00]	.169 [4.30]	M5	1/4-20UNC	2.102 [53.40]	.157 [4.00]	2.835 [72.00]	.947 [24.05]	1.250 [31.75]	.921 [23.40]
36	1.937 [49.20]	2.500 [63.50]	.169 [4.30]	M5	1/4-20UNC	2.346 [59.60]	.157 [4.00]	2.953 [75.00]	.947 [24.05]	1.378 [35.00]	.921 [23.40]
40	2.185 [55.50]	2.752 [69.90]	.169 [4.30]	M5	1/4-20UNC	2.579 [65.50]	.157 [4.00]	3.071 [78.00]	.947 [24.05]	1.624 [41.25]	1.177 [29.90]

Dimensions are in Inches [mm]

JAM NUT RECEPTACLE

07R*/G07R*

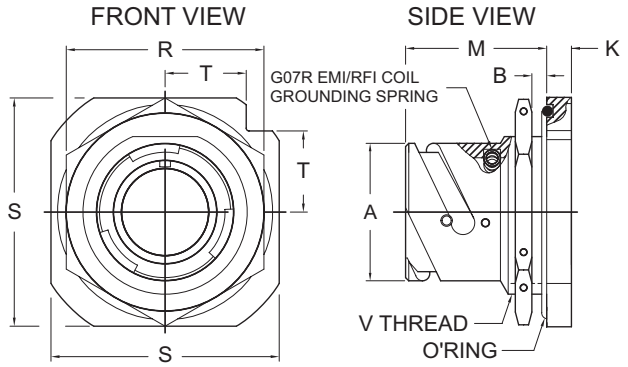

SCPB07R* **Environmental**
SCPBG07R* **Environmental with EMI/RFI ground spring**

SHELL SIZE	FRONT VIEW			SIDE VIEW					
	R ±.004 [±0.1]	S ±.012 [±0.3]	T MAX.	A +.000 [+0.00] -.006 [-0.15]	B PANEL THICKNESS MIN.	B PANEL THICKNESS MAX.	K ±.008 [±0.2]	M +.016 [+0.4] -.000 [-0.0]	V THREAD CLASS 2A
10SL	1.063 [27.00]	1.252 [31.80]	.441 [11.20]	.717 [18.20]	.094 [2.40]	.205 [5.20]	.157 [4.00]	.965 [24.50]	7/8-20 UNEF
14S	1.299 [33.00]	1.626 [41.30]	.575 [14.60]	.969 [24.60]	.094 [2.40]	.295 [7.50]	.189 [4.80]	1.055 [26.80]	1 1/8-18 UNEF
16S	1.500 [38.10]	1.748 [44.40]	.618 [15.70]	1.079 [27.40]	.094 [2.40]	.295 [7.50]	.189 [4.80]	1.055 [26.80]	1 1/4-18 UNEF
16	1.500 [38.10]	1.748 [44.40]	.618 [15.70]	1.079 [27.40]	.094 [2.40]	.295 [7.50]	.189 [4.80]	1.264 [32.10]	1 1/4-18 UNEF
18	1.563 [39.70]	1.874 [47.60]	.661 [16.80]	1.213 [30.80]	.094 [2.40]	.354 [9.00]	.189 [4.80]	1.327 [33.70]	1 3/8-18 UNEF
20	1.732 [44.00]	2.000 [50.80]	.709 [18.00]	1.346 [34.20]	.094 [2.40]	.354 [9.00]	.189 [4.80]	1.327 [33.70]	1 1/2-18 UNEF
22	1.811 [46.00]	2.134 [54.20]	.795 [20.20]	1.472 [37.40]	.094 [2.40]	.358 [9.10]	.189 [4.80]	1.327 [33.70]	1 5/8-18 UNEF
24	2.000 [50.80]	2.252 [57.20]	.795 [20.20]	1.610 [40.90]	.094 [2.40]	.358 [9.10]	.189 [4.80]	1.386 [35.20]	1 3/4-18 UNEF
28	2.165 [55.00]	2.500 [63.50]	.886 [22.50]	1.839 [46.70]	.094 [2.40]	.335 [8.50]	.220 [5.60]	1.386 [35.20]	2-18 UNS
32	2.441 [62.00]	2.748 [69.80]	.972 [24.70]	2.102 [53.40]	.094 [2.40]	.256 [6.50]	.220 [5.60]	1.386 [35.20]	2 1/4-16 UN
36	2.795 [71.00]	3.000 [76.20]	1.059 [26.90]	2.346 [59.60]	.094 [2.40]	.327 [8.30]	.220 [5.60]	1.386 [35.20]	2 1/2-16 UN
40	2.953 [75.00]	3.287 [83.50]	1.165 [29.60]	2.579 [65.50]	.094 [2.40]	.327 [8.30]	.220 [5.60]	1.386 [35.20]	2 3/4-16 UN

Dimensions are in Inches [mm]

SPACECRAFT COMPONENTS CORP.
3040 Clayton Street
North Las Vegas, NV 89032
Phone: 702.851.7600
Fax: 702.851.7620
Email: salesinfo@spacecraft.com
Web: www.spacecraft.com

JAM NUT RECEPTACLE

070–*/G070–*

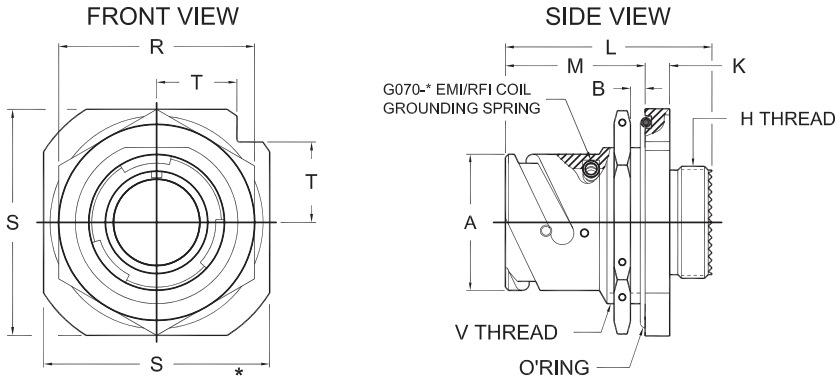

070-* Environmental
G070-* Environmental with EMI/RFI ground spring

SHELL SIZE	FRONT VIEW			SIDE VIEW							
	R ±.004 [±0.1]	S ±.012 [±0.3]	T MAX.	A +.000 [+0.00] -.006 [-0.15]	B PANEL THICKNESS MIN.	B PANEL THICKNESS MAX.	H THREAD CLASS 2A	K ±.008 [±0.2]	L MAX.	M +.016 [+0.4] -.000 [-0.0]	V THREAD CLASS 2A
10SL	1.063 [27.00]	1.252 [31.80]	.441 [11.20]	.717 [18.20]	.094 [2.40]	.205 [5.20]	5/8-24 UNEF	.157 [4.00]	1.425 [36.20]	.965 [24.50]	7/8-20 UNEF
14S	1.299 [33.00]	1.626 [41.30]	.575 [14.60]	.969 [24.60]	.094 [2.40]	.295 [7.50]	3/4-20 UNEF	.189 [4.80]	1.531 [38.90]	1.055 [26.80]	1 1/8-18 UNEF
16S	1.500 [38.10]	1.748 [44.40]	.618 [15.70]	1.079 [27.40]	.094 [2.40]	.295 [7.50]	7/8-20 UNEF	.189 [4.80]	1.531 [38.90]	1.055 [26.80]	1 1/4-18 UNEF
16	1.500 [38.10]	1.748 [44.40]	.618 [15.70]	1.079 [27.40]	.094 [2.40]	.295 [7.50]	7/8-20 UNEF	.189 [4.80]	1.909 [48.50]	1.264 [32.10]	1 1/4-18 UNEF
18	1.563 [39.70]	1.874 [47.60]	.661 [16.80]	1.213 [30.80]	.094 [2.40]	.354 [9.00]	1-20 UNEF	.189 [4.80]	1.878 [47.70]	1.327 [33.70]	1 3/8-18 UNEF
20	1.732 [44.00]	2.000 [50.80]	.709 [18.00]	1.346 [34.20]	.094 [2.40]	.354 [9.00]	1 1/8-18 UNEF	.189 [4.80]	1.941 [49.30]	1.327 [33.70]	1 1/2-18 UNEF
22	1.811 [46.00]	2.252 [57.20]	.795 [20.20]	1.472 [37.40]	.094 [2.40]	.358 [9.10]	1 1/4-18 UNEF	.189 [4.80]	1.941 [49.30]	1.327 [33.70]	1 5/8-18 UNEF
24	2.000 [50.80]	2.252 [57.20]	.795 [20.20]	1.610 [40.90]	.094 [2.40]	.358 [9.10]	1 3/8-18 UNEF	.189 [4.80]	1.953 [49.60]	1.327 [33.70]	1 3/4-18 UNEF
28	2.165 [55.00]	2.500 [63.50]	.886 [22.50]	1.839 [46.70]	.094 [2.40]	.335 [8.50]	1 5/8-18 UNEF	.220 [5.60]	2.020 [51.30]	1.386 [35.20]	2-18 UNS
32	2.441 [62.00]	2.748 [69.80]	.972 [24.70]	2.102 [53.40]	.094 [2.40]	.256 [6.50]	1 7/8-16 UN	.220 [5.60]	2.020 [51.30]	1.386 [35.20]	2 1/4-16 UN
36	2.795 [71.00]	3.000 [76.20]	1.059 [26.90]	2.346 [59.60]	.094 [2.40]	.327 [8.30]	2 1/16-16 UN	.220 [5.60]	2.020 [51.30]	1.386 [35.20]	2 1/2-16 UN
40	2.953 [75.00]	3.287 [83.50]	1.165 [29.60]	2.579 [65.50]	.094 [2.40]	.327 [8.30]	2 5/16-16 UNS	.220 [5.60]	2.016 [51.20]	1.386 [35.20]	2 3/4-16 UN

Dimensions are in Inches [mm]

070SV*/G070SV*

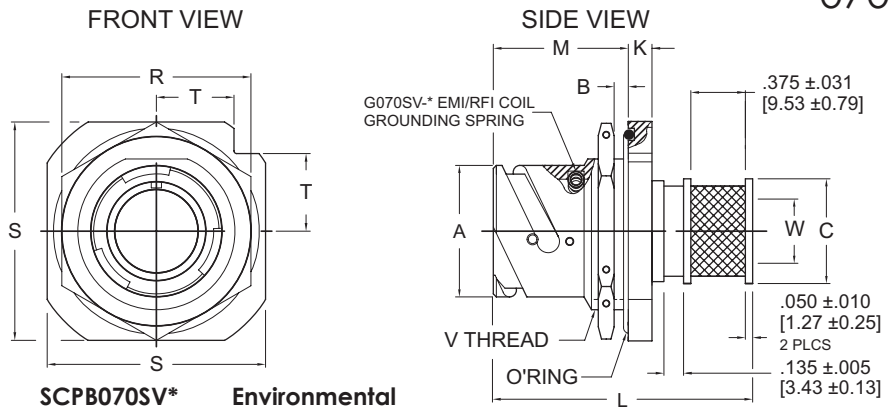

SCPB070SV* Environmental
SCPBG070SV* Environmental with EMI/RFI ground spring

SHELL SIZE	FRONT VIEW			SIDE VIEW								
	R ±.004 [±0.1]	S ±.012 [±0.3]	T MAX.	A +.000 [+0.00] -.006 [-0.15]	B PANEL THICKNESS MIN.	B PANEL THICKNESS MAX.	C MAX.	K ±.008 [±0.2]	L MAX.	M +.016 [+0.4] -.000 [-0.0]	V THREAD CLASS 2A	W MIN
10SL	1.063 [27.00]	1.252 [31.80]	.441 [11.20]	.717 [18.20]	.094 [2.40]	.205 [5.20]	.634 [16.10]	.157 [4.00]	1.626 [41.30]	.965 [24.50]	7/8-20 UNEF	.476 [12.10]
14S	1.299 [33.00]	1.626 [41.30]	.575 [14.60]	.969 [24.60]	.094 [2.40]	.295 [7.50]	.756 [19.20]	.189 [4.80]	1.736 [44.10]	1.055 [26.80]	1 1/8-18 UNEF	.606 [15.40]
16S	1.500 [38.10]	1.748 [44.40]	.618 [15.70]	1.079 [27.40]	.094 [2.40]	.295 [7.50]	.882 [22.40]	.189 [4.80]	1.736 [44.10]	1.055 [26.80]	1 1/4-18 UNEF	.736 [18.70]
16	1.500 [38.10]	1.748 [44.40]	.618 [15.70]	1.079 [27.40]	.094 [2.40]	.295 [7.50]	.882 [22.40]	.189 [4.80]	2.059 [52.30]	1.264 [32.10]	1 1/4-18 UNEF	.736 [18.70]
18	1.563 [39.70]	1.874 [47.60]	.661 [16.80]	1.213 [30.80]	.094 [2.40]	.354 [9.00]	1.004 [25.50]	.189 [4.80]	2.118 [53.80]	1.327 [33.70]	1 3/8-18 UNEF	.862 [21.90]
20	1.732 [44.00]	2.000 [50.80]	.709 [18.00]	1.346 [34.20]	.094 [2.40]	.354 [9.00]	1.130 [28.70]	.189 [4.80]	2.118 [53.80]	1.327 [33.70]	1 1/2-18 UNEF	.976 [24.80]
22	1.811 [46.00]	2.252 [57.20]	.795 [20.20]	1.472 [37.40]	.094 [2.40]	.358 [9.10]	1.256 [31.90]	.189 [4.80]	2.118 [53.80]	1.327 [33.70]	1 5/8-18 UNEF	1.106 [28.10]
24	2.000 [50.80]	2.252 [57.20]	.795 [20.20]	1.610 [40.90]	.094 [2.40]	.358 [9.10]	1.382 [35.10]	.189 [4.80]	2.118 [53.80]	1.327 [33.70]	1 3/4-18 UNEF	1.228 [31.20]
28	2.165 [55.00]	2.500 [63.50]	.886 [22.50]	1.839 [46.70]	.094 [2.40]	.335 [8.50]	1.630 [41.40]	.220 [5.60]	2.209 [56.10]	1.386 [35.20]	2-18 UNS	1.413 [35.90]
32	2.441 [62.00]	2.748 [69.80]	.972 [24.70]	2.102 [53.40]	.094 [2.40]	.256 [6.50]	1.882 [47.80]	.220 [5.60]	2.209 [56.10]	1.386 [35.20]	2 1/4-16 UN	1.697 [43.10]
36	2.795 [71.00]	3.000 [76.20]	1.059 [26.90]	2.346 [59.60]	.094 [2.40]	.327 [8.30]	2.067 [52.50]	.220 [5.60]	2.209 [56.10]	1.386 [35.20]	2 1/2-16 UN	1.890 [48.00]
40	2.953 [75.00]	3.287 [83.50]	1.165 [29.60]	2.579 [65.50]	.094 [2.40]	.327 [8.30]	2.319 [58.90]	.220 [5.60]	2.209 [56.10]	1.386 [35.20]	2 3/4-16 UN	2.118 [53.80]

Dimensions are in Inches [mm]

90° JAM NUT RECEPTACLE

078A*/078R*

FRONT VIEW

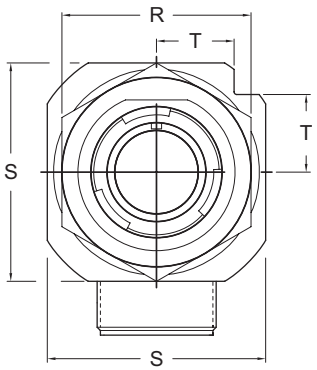

SIDE VIEW

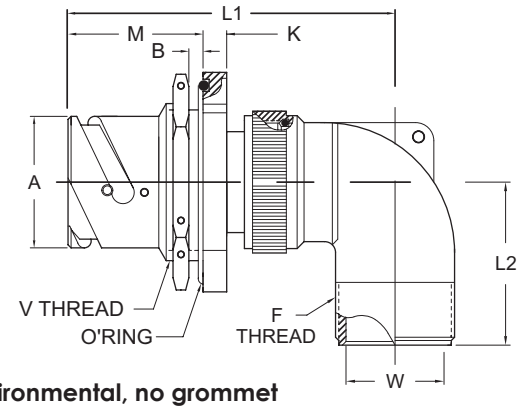

SCPB078A* **Non-Environmental, no grommet**
SCPB078R* **Environmental with grommet**

SHELL SIZE	FRONT VIEW			SIDE VIEW										
	R ±.004 [±0.1]	S ±.012 [±0.3]	T MAX.	A +.000 [+0.00] -.006 [-0.15]	B PANEL THICKNESS MIN.	B PANEL THICKNESS MAX.	F THREAD CLASS 2A	K ±.008 [±0.2]	L1 MAX.	L2 MAX.	M +.016 [+0.4] -.000 [-0.0]	V THREAD CLASS 2A	W MIN
10SL	1.063 [27.00]	1.252 [31.80]	.441 [11.20]	.717 [18.20]	.094 [2.40]	.205 [5.20]	5/8-24 UNEF	.157 [4.00]	1.969 [50.00]	.984 [25.00]	.965 [24.50]	7/8-20 UNEF	.335 [8.50]
14S	1.299 [33.00]	1.626 [41.30]	.575 [14.60]	.969 [24.60]	.094 [2.40]	.295 [7.50]	3/4-20 UNEF	.189 [4.80]	2.165 [55.00]	1.043 [26.50]	1.055 [26.80]	1 1/8-18 UNEF	.472 [12.00]
16S	1.500 [38.10]	1.748 [44.40]	.618 [15.70]	1.079 [27.40]	.094 [2.40]	.295 [7.50]	7/8-20 UNEF	.189 [4.80]	2.283 [58.00]	1.063 [27.00]	1.055 [26.80]	1 1/4-18 UNEF	.571 [14.50]
16	1.500 [38.10]	1.748 [44.40]	.618 [15.70]	1.079 [27.40]	.094 [2.40]	.295 [7.50]	7/8-20 UNEF	.189 [4.80]	2.677 [68.00]	1.063 [27.00]	1.264 [32.10]	1 1/4-18 UNEF	.571 [14.50]
18	1.563 [39.70]	1.874 [47.60]	.661 [16.80]	1.213 [30.80]	.094 [2.40]	.354 [9.00]	1-20 UNEF	.189 [4.80]	2.756 [70.00]	1.181 [30.00]	1.327 [33.70]	1 3/8-18 UNEF	.689 [17.50]
20	1.732 [44.00]	2.000 [50.80]	.709 [18.00]	1.346 [34.20]	.094 [2.40]	.354 [9.00]	1 3/16-18 UNEF	.189 [4.80]	2.953 [75.00]	1.260 [32.00]	1.327 [33.70]	1 1/2-18 UNEF	.768 [19.50]
22	1.811 [46.00]	2.252 [57.20]	.795 [20.20]	1.472 [37.40]	.094 [2.40]	.358 [9.10]	1 3/16-18 UNEF	.189 [4.80]	2.953 [75.00]	1.260 [32.00]	1.327 [33.70]	1 5/8-18 UNEF	.866 [22.00]
24	2.000 [50.80]	2.252 [57.20]	.795 [20.20]	1.610 [40.90]	.094 [2.40]	.358 [9.10]	1 7/16-18 UNEF	.189 [4.80]	3.110 [79.00]	1.457 [37.00]	1.327 [33.70]	1 3/4-18 UNEF	.984 [25.00]
28	2.165 [55.00]	2.500 [63.50]	.886 [22.50]	1.839 [46.70]	.094 [2.40]	.335 [8.50]	1 7/16-18 UNEF	.220 [5.60]	3.189 [81.00]	1.496 [38.00]	1.386 [35.20]	2-18 UNS	1.142 [29.00]
32	2.441 [62.00]	2.748 [69.80]	.972 [24.70]	2.102 [53.40]	.094 [2.40]	.256 [6.50]	1 3/4-18 UNS	.220 [5.60]	3.346 [85.00]	1.791 [45.50]	1.386 [35.20]	2 1/4-16 UN	1.339 [34.00]
36	2.795 [71.00]	3.000 [76.20]	1.059 [26.90]	2.346 [59.60]	.094 [2.40]	.327 [8.30]	2 -18 UNS	.220 [5.60]	3.465 [88.00]	1.858 [47.20]	1.386 [35.20]	2 1/2-16 UN	1.516 [38.50]
40	2.953 [75.00]	3.287 [83.50]	1.165 [29.60]	2.579 [65.50]	.094 [2.40]	.327 [8.30]	2 1/4-16 UN	.220 [5.60]	3.583 [91.00]	2.047 [52.00]	1.386 [35.20]	2 3/4-16 UN	1.890 [48.00]

Dimensions are in Inches [mm]

078AF*/078F*

FRONT VIEW

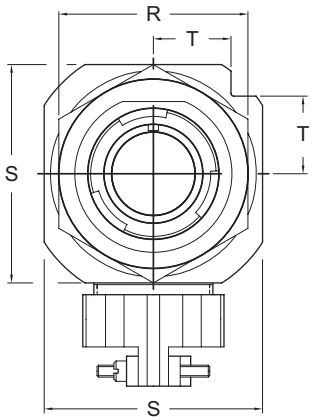

SIDE VIEW

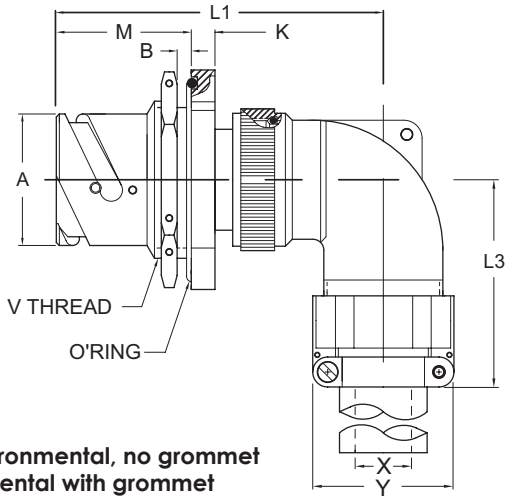

SCPB078AF* **Non-Environmental, no grommet**
SCPB078F* **Environmental with grommet**

SHELL SIZE	FRONT VIEW			SIDE VIEW									
	R ±.004 [±0.1]	S ±.012 [±0.3]	T MAX.	A +.000 [+0.00] -.006 [-0.15]	B PANEL THICKNESS MIN.	B PANEL THICKNESS MAX.	K ±.008 [±0.2]	L1 MAX	L3 MAX	M +.016 [+0.4] -.000 [-0.0]	V THREAD CLASS 2A	X MIN	Y MAX
10SL	1.063 [27.00]	1.252 [31.80]	.441 [11.20]	.717 [18.20]	.094 [2.40]	.205 [5.20]	.157 [4.00]	1.772 [45.00]	1.654 [42.00]	.965 [24.50]	7/8-20 UNEF	.256 [6.50]	.894 [22.70]
14S	1.299 [33.00]	1.626 [41.30]	.575 [14.60]	.969 [24.60]	.094 [2.40]	.295 [7.50]	.189 [4.80]	1.850 [47.00]	1.654 [42.00]	1.055 [26.80]	1 1/8-18 UNEF	.354 [9.00]	1.083 [27.50]
16S	1.500 [38.10]	1.748 [44.40]	.618 [15.70]	1.079 [27.40]	.094 [2.40]	.295 [7.50]	.189 [4.80]	1.890 [48.00]	1.772 [45.00]	1.055 [26.80]	1 1/4-18 UNEF	.433 [11.00]	1.181 [30.00]
16	1.500 [38.10]	1.748 [44.40]	.618 [15.70]	1.079 [27.40]	.094 [2.40]	.295 [7.50]	.189 [4.80]	2.244 [57.00]	1.772 [45.00]	1.264 [32.10]	1 1/4-18 UNEF	.433 [11.00]	1.181 [30.00]
18	1.563 [39.70]	1.874 [47.60]	.661 [16.80]	1.213 [30.80]	.094 [2.40]	.354 [9.00]	.189 [4.80]	2.283 [58.00]	2.087 [53.00]	1.327 [33.70]	1 3/8-18 UNEF	.559 [14.20]	1.268 [32.20]
20	1.732 [44.00]	2.000 [50.80]	.709 [18.00]	1.346 [34.20]	.094 [2.40]	.354 [9.00]	.189 [4.80]	2.402 [61.00]	2.087 [53.00]	1.327 [33.70]	1 1/2-18 UNEF	.622 [15.80]	1.476 [37.50]
22	1.811 [46.00]	2.252 [57.20]	.795 [20.20]	1.472 [37.40]	.094 [2.40]	.358 [9.10]	.189 [4.80]	2.402 [61.00]	2.087 [53.00]	1.327 [33.70]	1 5/8-18 UNEF	.622 [15.80]	1.476 [37.50]
24	2.000 [50.80]	2.252 [57.20]	.795 [20.20]	1.610 [40.90]	.094 [2.40]	.358 [9.10]	.189 [4.80]	2.598 [66.00]	2.283 [58.00]	1.327 [33.70]	1 3/4-18 UNEF	.843 [21.40]	1.705 [43.30]
28	2.165 [55.00]	2.500 [63.50]	.886 [22.50]	1.839 [46.70]	.094 [2.40]	.335 [8.50]	.220 [5.60]	2.598 [66.00]	2.283 [58.00]	1.386 [35.20]	2-18 UNS	.843 [21.40]	1.705 [43.30]
32	2.441 [62.00]	2.748 [69.80]	.972 [24.70]	2.102 [53.40]	.094 [2.40]	.256 [6.50]	.220 [5.60]	2.835 [72.00]	2.598 [66.00]	1.386 [35.20]	2 1/4-16 UN	1.051 [26.70]	2.035 [51.70]
36	2.795 [71.00]	3.000 [76.20]	1.059 [26.90]	2.346 [59.60]	.094 [2.40]	.327 [8.30]	.220 [5.60]	2.953 [75.00]	2.717 [69.00]	1.386 [35.20]	2 1/2-16 UN	1.248 [31.70]	2.283 [58.00]
40	2.953 [75.00]	3.287 [83.50]	1.165 [29.60]	2.579 [65.50]	.094 [2.40]	.327 [8.30]	.220 [5.60]	3.071 [78.00]	3.740 [95.00]	1.386 [35.20]	2 3/4-16 UN	1.374 [34.90]	2.579 [65.50]

Dimensions are in Inches [mm]

SPACECRAFT COMPONENTS CORP.
3040 Clayton Street
North Las Vegas, NV 89032
Phone: 702.851.7600
Fax: 702.851.7620
Email: salesinfo@spacecraft.com
Web: www.spacecraft.com

THRU BULKHEAD RECEPTACLE

TB*

MOUNTING HOLE OPTION

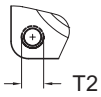

THREADED MOUNTING HOLE CODES

CODE	MOUNTING HOLE TYPE
FP	Thru holes
None	Metric thread - Standard
UN	UNC thread

FRONT VIEW

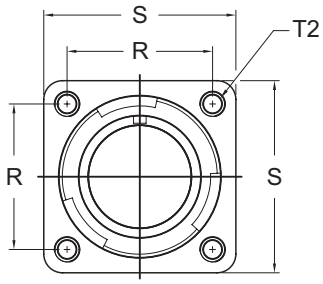

SIDE VIEW

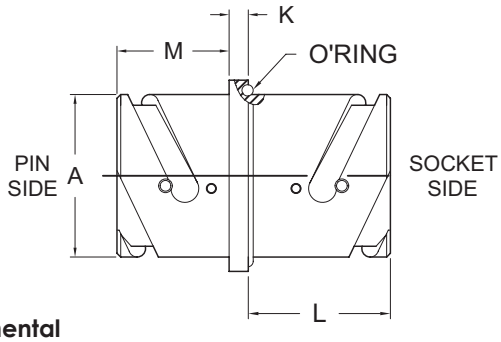

SCPBTB* Environmental

SHELL SIZE	FRONT VIEW					SIDE VIEW			
	R ±.004 [±0.1]	S ±.012 [±0.3]	T1 +.004 [+0.1] -.000 [-0.0]	T2 THREAD		A +.000 [+0.00] -.006 [-0.15]	K ±.008 [±0.2]	L MAX	M +.016 [+0.4] -.000 [-0.0]
				METRIC	UNC				
10SL	.717 [18.20]	1.000 [25.40]	.126 [3.20]	M4	8-32UNC	.717 [18.20]	.110 [2.80]	.807 [20.50]	.559 [14.20]
14S	.906 [23.00]	1.181 [30.00]	.126 [3.20]	M4	8-32UNC	.969 [24.60]	.126 [3.20]	.791 [20.10]	.559 [14.20]
16S	.969 [24.60]	1.280 [32.50]	.126 [3.20]	M4	8-32UNC	1.079 [27.40]	.126 [3.20]	.791 [20.10]	.559 [14.20]
16	.969 [24.60]	1.280 [32.50]	.126 [3.20]	M4	8-32UNC	1.079 [27.40]	.126 [3.20]	1.150 [29.20]	.748 [19.00]
18	1.063 [27.00]	1.378 [35.00]	.126 [3.20]	M4	8-32UNC	1.213 [30.80]	.157 [4.00]	1.118 [28.40]	.748 [19.00]
20	1.157 [29.40]	1.496 [38.00]	.126 [3.20]	M4	8-32UNC	1.346 [34.20]	.157 [4.00]	1.118 [28.40]	.748 [19.00]
22	1.252 [31.80]	1.614 [41.00]	.126 [3.20]	M4	8-32UNC	1.472 [37.40]	.157 [4.00]	1.118 [28.40]	.748 [19.00]
24	1.374 [34.90]	1.752 [44.50]	.146 [3.70]	M4	10-24UNC	1.610 [40.90]	.157 [4.00]	1.055 [26.80]	.811 [20.60]
28	1.563 [39.70]	2.000 [50.80]	.146 [3.70]	M5	10-24UNC	1.839 [46.70]	.157 [4.00]	1.055 [26.80]	.811 [20.60]
32	1.752 [44.50]	2.244 [57.00]	.169 [4.30]	M5	1/4-20UNC	2.102 [53.40]	.157 [4.00]	.992 [25.20]	.874 [22.20]
36	1.937 [49.20]	2.500 [63.50]	.169 [4.30]	M5	1/4-20UNC	2.346 [59.60]	.157 [4.00]	.992 [25.20]	.874 [22.20]
40	2.185 [55.50]	2.748 [69.80]	.169 [4.30]	M5	1/4-20UNC	2.579 [65.50]	.157 [4.00]	.992 [25.20]	.874 [22.20]

Dimensions are in Inches [mm]

STRAIGHT PLUG

06–*

FRONT VIEW

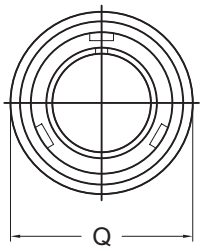

SIDE VIEW

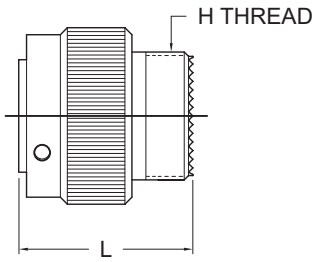

SCPB06-* Non-environmental

SHELL SIZE	FRONT VIEW	SIDE VIEW	
	Q MAX	H THREAD CLASS 2A	L ±.012 [±0.3]
10SL	.898 [22.80]	5/8-24 UNEF	.972 [24.70]
14S	1.150 [29.20]	3/4-20 UNEF	.972 [24.70]
16S	1.299 [33.00]	7/8-20 UNEF	.972 [24.70]
16	1.299 [33.00]	7/8-20 UNEF	1.331 [33.80]
18	1.437 [36.50]	1-20 UNEF	1.331 [33.80]
20	1.571 [39.90]	1 1/8-18 UNEF	1.331 [33.80]
22	1.697 [43.10]	1 1/4-18 UNEF	1.331 [33.80]
24	1.835 [46.60]	1 3/8-18 UNEF	1.406 [35.70]
28	2.102 [53.40]	1 5/8-18 UNEF	1.406 [35.70]
32	2.366 [60.10]	1 7/8-16 UN	1.469 [37.30]
36	2.610 [66.30]	2 1/16-16 UN	1.469 [37.30]
40	2.850 [72.40]	2 5/16-16 UNS	1.469 [37.30]

Dimensions are in Inches [mm]

STRAIGHT PLUG

06A*/06R*

FRONT VIEW

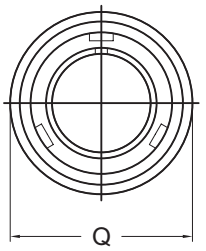

SIDE VIEW

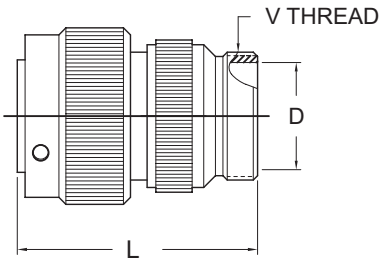

SCPB06A* **Non-environmental, no grommet**
SCPB06R* **Environmental with grommet**

SHELL SIZE	FRONT VIEW	SIDE VIEW		
	Q MAX	D MIN.	L MAX.	V THREAD CLASS 2A
10SL	.898 [22.80]	.323 [8.20]	1.850 [47.00]	5/8-24 UNEF
14S	1.150 [29.20]	.437 [11.10]	1.850 [47.00]	3/4-20 UNEF
16S	1.299 [33.00]	.563 [14.30]	1.850 [47.00]	7/8-20 UNEF
16	1.299 [33.00]	.563 [14.30]	2.283 [58.00]	7/8-20 UNEF
18	1.437 [36.50]	.657 [16.70]	2.283 [58.00]	1-20 UNEF
20	1.571 [39.90]	.780 [19.80]	2.283 [58.00]	1 3/16-18 UNEF
22	1.697 [43.10]	.780 [19.80]	2.323 [59.00]	1 3/16-18 UNEF
24	1.835 [46.60]	1.000 [25.40]	2.402 [61.00]	1 7/16-18 UNEF
28	2.102 [53.40]	1.063 [27.00]	2.638 [67.00]	1 7/16-18 UNEF
32	2.366 [60.10]	1.280 [32.50]	2.795 [71.00]	1 3/4-18 UNS
36	2.610 [66.30]	1.406 [35.70]	2.795 [71.00]	2-18 UNS
40	2.850 [72.40]	1.772 [45.00]	3.386 [86.00]	2 1/4-16 UN

Dimensions are in Inches [mm]

06AE*/06E*

FRONT VIEW

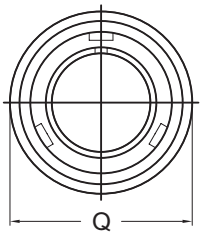

SIDE VIEW

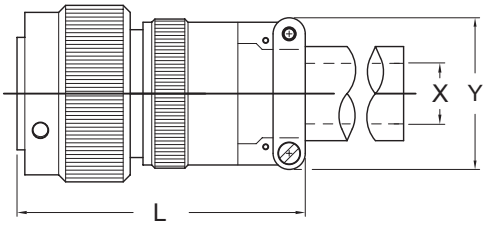

SCPB06AE* **Non-environmental, no grommet**
SCPB06E* **Environmental with grommet**

SHELL SIZE	FRONT VIEW	SIDE VIEW		
	Q MAX	L MAX	X MIN	Y MAX
10SL	.898 [22.80]	2.520 [64.00]	.256 [6.50]	.894 [22.70]
14S	1.150 [29.20]	2.717 [69.00]	.354 [9.00]	1.083 [27.50]
16S	1.299 [33.00]	2.795 [71.00]	.433 [11.00]	1.181 [30.00]
16	1.299 [33.00]	3.228 [82.00]	.433 [11.00]	1.181 [30.00]
18	1.437 [36.50]	3.228 [82.00]	.559 [14.20]	1.268 [32.20]
20	1.571 [39.90]	3.228 [82.00]	.622 [15.80]	1.476 [37.50]
22	1.697 [43.10]	3.268 [83.00]	.622 [15.80]	1.476 [37.50]
24	1.835 [46.60]	3.425 [87.00]	.843 [21.40]	1.705 [43.30]
28	2.102 [53.40]	3.661 [93.00]	.843 [21.40]	1.705 [43.30]
32	2.366 [60.10]	3.898 [99.00]	1.051 [26.70]	2.035 [51.70]
36	2.610 [66.30]	3.937 [100.00]	1.248 [31.70]	2.283 [58.00]
40	2.850 [72.40]	5.039 [128.00]	1.374 [34.90]	2.579 [65.50]

Dimensions are in Inches [mm]

SPACECRAFT COMPONENTS CORP.
3040 Clayton Street
North Las Vegas, NV 89032
Phone: 702.851.7600
Fax: 702.851.7620
Email: salesinfo@spacecraft.com
Web: www.spacecraft.com

06AF*/06F*

FRONT VIEW

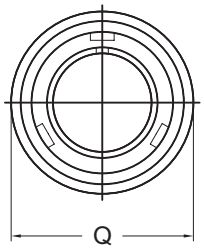

SIDE VIEW

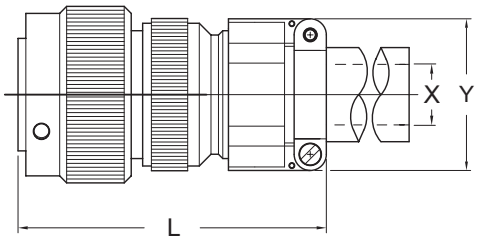

SCPB06AF* **Non-environmental, no grommet**
SCPB06F* **Environmental with grommet**

SHELL SIZE	FRONT VIEW	SIDE VIEW		
	Q MAX	L MAX	X MIN	Y MAX
10SL	.898 [22.80]	2.520 [64.00]	.256 [6.50]	.894 [22.70]
14S	1.150 [29.20]	2.717 [69.00]	.354 [9.00]	1.083 [27.50]
16S	1.299 [33.00]	2.795 [71.00]	.433 [11.00]	1.181 [30.00]
16	1.299 [33.00]	3.228 [82.00]	.433 [11.00]	1.181 [30.00]
18	1.437 [36.50]	3.228 [82.00]	.559 [14.20]	1.268 [32.20]
20	1.571 [39.90]	3.228 [82.00]	.622 [15.80]	1.476 [37.50]
22	1.697 [43.10]	3.268 [83.00]	.622 [15.80]	1.476 [37.50]
24	1.835 [46.60]	3.425 [87.00]	.843 [21.40]	1.705 [43.30]
28	2.102 [53.40]	3.661 [93.00]	.843 [21.40]	1.705 [43.30]
32	2.366 [60.10]	3.898 [99.00]	1.051 [26.70]	2.035 [51.70]
36	2.610 [66.30]	3.937 [100.00]	1.248 [31.70]	2.283 [58.00]
40	2.850 [72.40]	5.039 [128.00]	1.374 [34.90]	2.579 [65.50]

Dimensions are in Inches [mm]

06AFFG*/06FGG*

FRONT VIEW

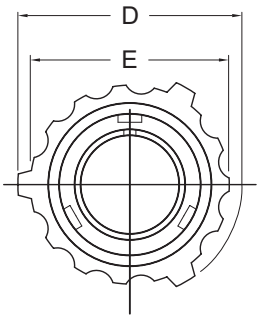

SIDE VIEW

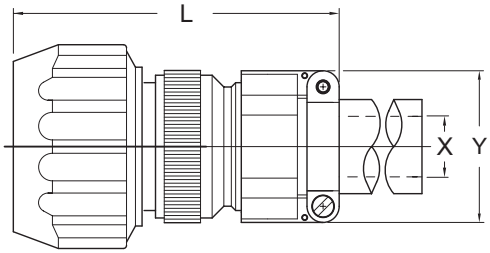

SCPB06AFGG* **Non-environmental, no grommet**
SCPB06FGG* **Environmental with grommet**

SHELL SIZE	FRONT VIEW		SIDE VIEW		
	D DIA.	E DIA.	L MAX	X MIN	Y MAX
10SL	1.319 [33.50]	1.122 [28.50]	2.661 [67.60]	.256 [6.50]	.894 [22.70]
14S	1.583 [40.20]	1.280 [32.50]	2.858 [72.60]	.354 [9.00]	1.083 [27.50]
16S	* [*]	* [*]	2.937 [74.60]	.433 [11.00]	1.181 [30.00]
16	* [*]	* [*]	3.366 [85.50]	.433 [11.00]	1.181 [30.00]
18	1.929 [49.00]	1.713 [43.50]	3.366 [85.50]	.559 [14.20]	1.268 [32.20]
20	2.028 [51.50]	1.811 [46.00]	3.366 [85.50]	.622 [15.80]	1.476 [37.50]
22	2.224 [56.50]	1.988 [50.50]	3.409 [86.60]	.622 [15.80]	1.476 [37.50]
24	2.362 [60.00]	2.126 [54.00]	3.567 [90.60]	.843 [21.40]	1.705 [43.30]
28	2.638 [67.00]	2.402 [61.00]	3.799 [96.50]	.843 [21.40]	1.705 [43.30]
32	2.992 [76.00]	2.661 [67.60]	4.039 [102.60]	1.051 [26.70]	2.035 [51.70]
36	3.240 [82.30]	2.925 [74.30]	4.079 [103.60]	1.248 [31.70]	2.283 [58.00]
40	3.465 [88.00]	3.150 [80.00]	5.177 [131.50]	1.374 [34.90]	2.579 [65.50]

Dimensions are in Inches [mm]
* Consult factory for dimensions.

STRAIGHT PLUG

06AG*/06G*

FRONT VIEW

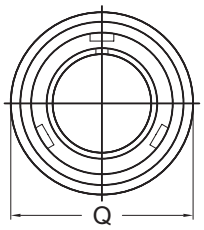

SIDE VIEW

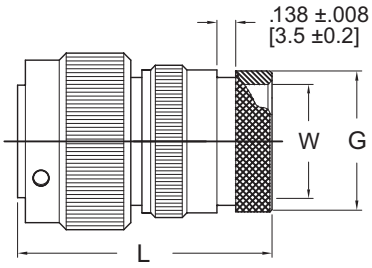

SCPB06AG* **Environmental, no grommet**
SCPB06G* **Environmental with grommet**

SHELL SIZE	FRONT VIEW	SIDE VIEW		
	Q MAX	G ±.008 [±0.2]	L MAX	W MIN
10SL	.898 [22.80]	.610 [15.50]	1.890 [48.00]	.335 [8.50]
14S	1.150 [29.20]	.752 [19.10]	1.890 [48.00]	.472 [12.00]
16S	1.299 [33.00]	.941 [23.90]	1.890 [48.00]	.571 [14.50]
16	1.299 [33.00]	.941 [23.90]	2.362 [60.00]	.571 [14.50]
18	1.437 [36.50]	.941 [23.90]	2.362 [60.00]	.689 [17.50]
20	1.571 [39.90]	1.165 [29.60]	2.559 [65.00]	.768 [19.50]
22	1.697 [43.10]	1.165 [29.60]	2.559 [65.00]	.866 [22.00]
24	1.835 [46.60]	1.488 [37.80]	2.559 [65.00]	.984 [25.00]
28	2.102 [53.40]	1.488 [37.80]	2.559 [65.00]	1.142 [29.00]
32	2.366 [60.10]	1.882 [47.80]	2.756 [70.00]	1.339 [34.00]
36	2.610 [66.30]	1.882 [47.80]	2.953 [75.00]	1.516 [38.50]
40	2.850 [72.40]	2.063 [52.40]	3.031 [77.00]	1.890 [48.00]

Dimensions are in Inches [mm]

06AGG*/06RGG*

FRONT VIEW

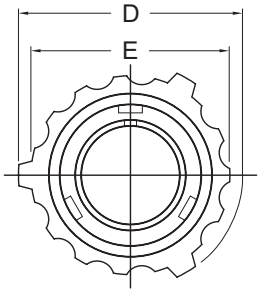

SIDE VIEW

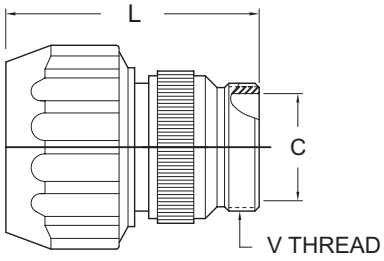

SCPB06AGG* **Non-environmental, no grommet**
SCPB06RGG* **Environmental with grommet**

SHELL SIZE	FRONT VIEW		SIDE VIEW		
	D DIA.	E DIA.	C MIN.	L MAX.	V THREAD CLASS 2A
10SL	1.319 [33.50]	1.122 [28.50]	.323 [8.20]	1.988 [50.50]	5/8-24 UNEF
14S	1.583 [40.20]	1.280 [32.50]	.437 [11.10]	1.988 [50.50]	3/4-20 UNEF
16S	* [*]	* [*]	.563 [14.30]	1.988 [50.50]	7/8-20 UNEF
16	* [*]	* [*]	.563 [14.30]	2.421 [61.50]	7/8-20 UNEF
18	1.929 [49.00]	1.713 [43.50]	.657 [16.70]	2.421 [61.50]	1-20 UNEF
20	2.028 [51.50]	1.811 [46.00]	.780 [19.80]	2.421 [61.50]	1 3/16-18 UNEF
22	2.224 [56.50]	1.988 [50.50]	.780 [19.80]	2.465 [62.60]	1 3/16-18 UNEF
24	2.362 [60.00]	2.126 [54.00]	1.000 [25.40]	2.543 [64.60]	1 7/16-18 UNEF
28	2.638 [67.00]	2.402 [61.00]	1.063 [27.00]	2.780 [70.60]	1 7/16-18 UNEF
32	2.992 [76.00]	2.661 [67.60]	1.280 [32.50]	2.937 [74.60]	1 3/4-18 UNS
36	3.240 [82.30]	2.925 [74.30]	1.406 [35.70]	2.937 [74.60]	2-18 UNS
40	3.465 [88.00]	3.150 [80.00]	1.772 [45.00]	3.528 [89.60]	2 1/4-16 UN

Dimensions are in Inches [mm]
* Consult factory for dimensions.

SPACECRAFT COMPONENTS CORP.
3040 Clayton Street
North Las Vegas, NV 89032
Phone: 702.851.7600
Fax: 702.851.7620
Email: salesinfo@spacecraft.com
Web: www.spacecraft.com

06AG2G*/06G2G*

FRONT VIEW

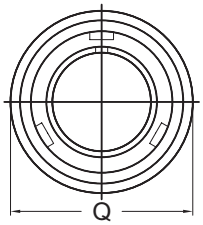

SIDE VIEW

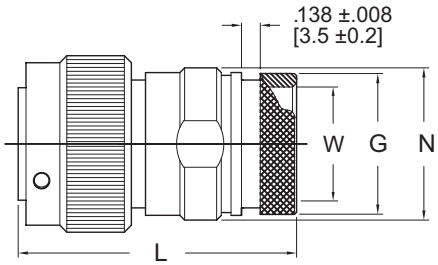

SCPB06AG2G* **Environmental, no grommet**
SCPB06G2G* **Environmental with grommet**

SHELL SIZE	FRONT VIEW	SIDE VIEW			
	Q MAX	G ±.008 [±0.2]	N MAX	L APRX	W MIN
10SL	.898 [22.80]	.610 [15.50]	.866 [22.00]	1.929 [49.00]	.335 [8.50]
14S	1.150 [29.20]	.752 [19.10]	.984 [25.00]	1.929 [49.00]	.472 [12.00]
16S	1.299 [33.00]	.941 [23.90]	1.102 [28.00]	1.961 [49.80]	.571 [14.50]
16	1.299 [33.00]	.941 [23.90]	1.102 [28.00]	2.335 [59.30]	.571 [14.50]
18	1.437 [36.50]	.941 [23.90]	1.220 [31.00]	2.315 [58.80]	.689 [17.50]
20	1.571 [39.90]	1.165 [29.60]	1.378 [35.00]	2.343 [59.50]	.768 [19.50]
22	1.697 [43.10]	1.165 [29.60]	1.496 [38.00]	2.343 [59.50]	.866 [22.00]
24	1.835 [46.60]	1.488 [37.80]	1.614 [41.00]	2.445 [62.10]	.984 [25.00]
28	2.102 [53.40]	1.488 [37.80]	1.890 [48.00]	2.516 [63.90]	1.142 [29.00]
32	2.366 [60.10]	1.882 [47.80]	2.126 [54.00]	2.606 [66.20]	1.339 [34.00]
36	2.610 [66.30]	1.882 [47.80]	2.402 [61.00]	2.606 [66.20]	1.516 [38.50]
40	2.850 [72.40]	2.063 [52.40]	2.677 [68.00]	2.618 [66.50]	1.890 [48.00]

Dimensions are in Inches [mm]

06APT*

FRONT VIEW

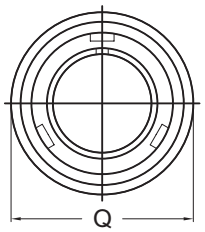

SIDE VIEW

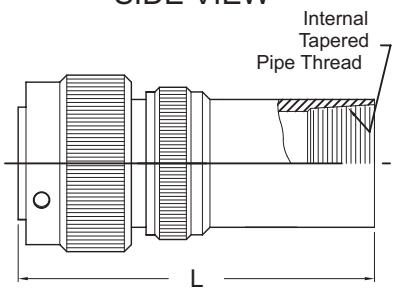

SCPB06APT* **Environmental, no grommet**

SHELL SIZE	FRONT VIEW	SIDE VIEW		
	Q MAX	L MAX	SUFFIX CODE	PIPE THREAD
10SL	.898 [22.80]	2.362 [60.00]	01	1/8
14S	1.150 [29.20]	2.362 [60.00]	02	1/4
16S	1.299 [33.00]	2.362 [60.00]	03	3/8
16	1.299 [33.00]	2.756 [70.00]	04	1/2
18	1.437 [36.50]	2.756 [70.00]	05	3/4
20	1.571 [39.90]	2.756 [70.00]	06	1
22	1.697 [43.10]	2.756 [70.00]	07	1 1/4
24	1.835 [46.60]	3.150 [80.00]	08	1 1/2
28	2.102 [53.40]	3.150 [80.00]	09	2
32	2.366 [60.10]	3.150 [80.00]	10	2 1/2
36	2.610 [66.30]	3.740 [95.00]	–	–
40	2.850 [72.40]	3.740 [95.00]	–	–

Dimensions are in Inches [mm]

STRAIGHT PLUG

06ARK*/06RK*

FRONT VIEW

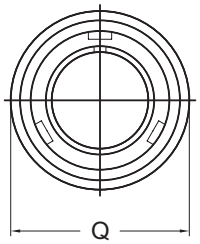

SIDE VIEW

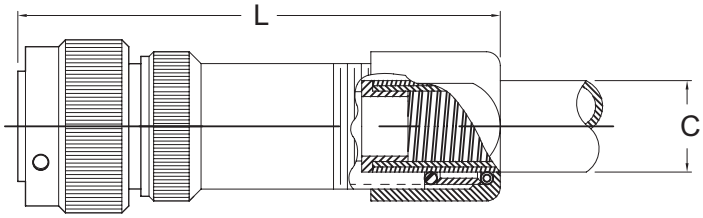

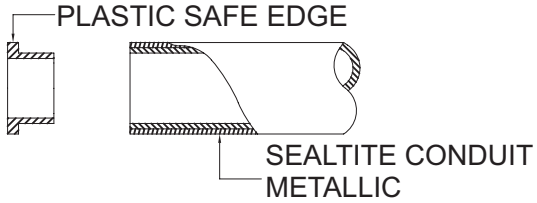

SCPB06ARK* **Environmental less grommet**
SCPB06RK* **Environmental with grommet**

SHELL SIZE	FRONT VIEW Q MAX	SIDE VIEW L
10SL	.898 [22.80]	Dimension L is dependent on conduit size used with each shell size. **Consult factory.**
14S	1.150 [29.20]	
16S	1.299 [33.00]	
16	1.299 [33.00]	
18	1.437 [36.50]	
20	1.571 [39.90]	
22	1.697 [43.10]	
24	1.835 [46.60]	
28	2.102 [53.40]	
32	2.366 [60.10]	
36	2.610 [66.30]	
40	2.850 [72.40]	

Dimensions are in Inches [mm]

CODE (***)	AVAILABLE CONDUIT SIZES C
(038)	3/8 [9.52]
(050)	1/2 [12.70]
(075)	3/4 [19.05]
(100)	1 [25.40]
(125)	1 1/4 [31.75]
(150)	1 1/2 [38.10]
(200)	2 [50.80]

(***) Conduit Size must be specified as part of the connector part number using Conduit Code

06ARKGG*/06RKGG*

FRONT VIEW

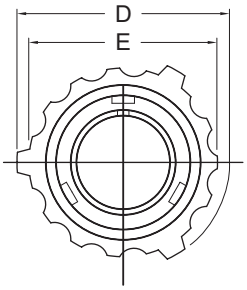

SIDE VIEW

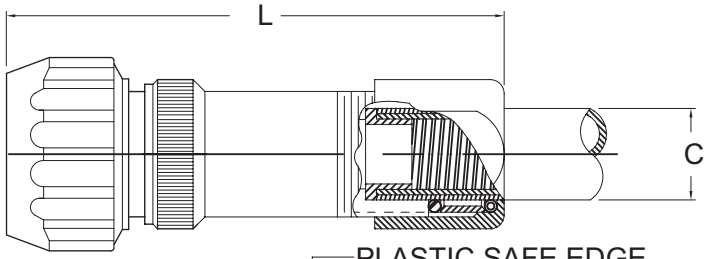

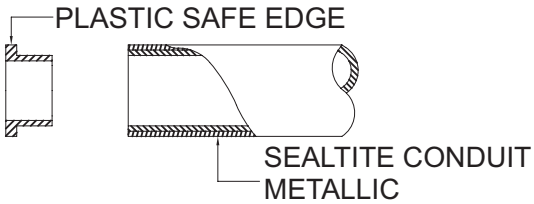

SCPB06ARKGG* **Environmental less grommet**
SCPB06RKGG* **Environmental with grommet**

SHELL SIZE	FRONT VIEW D DIA.	FRONT VIEW E DIA.	SIDE VIEW L
10SL	1.319 [33.50]	1.122 [28.50]	Dimension L is dependent on conduit size used with each shell size. **Consult factory.**
14S	1.583 [40.20]	1.280 [32.50]	
16S	* [*]	* [*]	
16	* [*]	* [*]	
18	1.929 [49.00]	1.713 [43.50]	
20	2.028 [51.50]	1.811 [46.00]	
22	2.224 [56.50]	1.988 [50.50]	
24	2.362 [60.00]	2.126 [54.00]	
28	2.638 [67.00]	2.402 [61.00]	
32	2.992 [76.00]	2.661 [67.60]	
36	3.240 [82.30]	2.925 [74.30]	
40	3.465 [88.00]	3.150 [80.00]	

Dimensions are in Inches [mm]
* Consult factory for dimensions.

CODE (***)	AVAILABLE CONDUIT SIZES C
(038)	3/8 [9.52]
(050)	1/2 [12.70]
(075)	3/4 [19.05]
(100)	1 [25.40]
(125)	1 1/4 [31.75]
(150)	1 1/2 [38.10]
(200)	2 [50.80]

(***) Conduit Size must be specified as part of the connector part number using Conduit Code

SPACECRAFT COMPONENTS CORP.
3040 Clayton Street
North Las Vegas, NV 89032
Phone: 702.851.7600
Fax: 702.851.7620
Email: salesinfo@spacecraft.com
Web: www.spacecraft.com

06ARV*/06RV*

FRONT VIEW

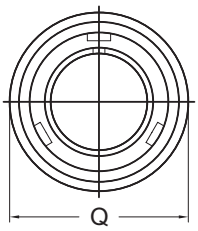

SIDE VIEW

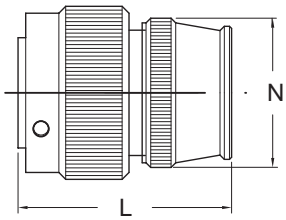

SCPB06ARV* **Non-environmental, no grommet**
SCPB06RV* **Environmental with grommet**

SHELL SIZE	FRONT VIEW	SIDE VIEW	
	Q MAX	L MAX	N MAX
10SL	.898 [22.80]	1.575 [40.00]	.787 [20.00]
14S	1.150 [29.20]	1.575 [40.00]	.945 [24.00]
16S	1.299 [33.00]	1.575 [40.00]	1.024 [26.00]
16	1.299 [33.00]	2.205 [56.00]	1.024 [26.00]
18	1.437 [36.50]	2.205 [56.00]	1.161 [29.50]
20	1.571 [39.90]	2.244 [57.00]	1.299 [33.00]
22	1.697 [43.10]	2.244 [57.00]	1.417 [36.00]
24	1.835 [46.60]	2.323 [59.00]	1.575 [40.00]
28	2.102 [53.40]	2.323 [59.00]	1.811 [46.00]
32	2.366 [60.10]	2.362 [60.00]	2.028 [51.50]
36	2.610 [66.30]	2.362 [60.00]	2.283 [58.00]
40	2.850 [72.40]	2.402 [61.00]	2.539 [64.50]

Dimensions are in Inches [mm]

06ASB*/06SB*

FRONT VIEW

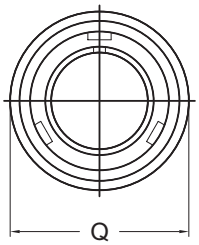

SIDE VIEW

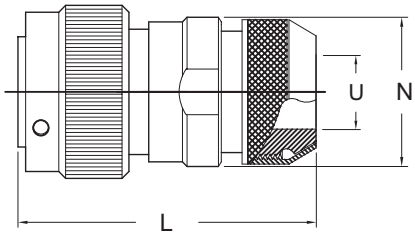

SCPB06ASB* **Environmental, no grommet**
SCPB06SB* **Environmental with grommet**

SHELL SIZE	FRONT VIEW	SIDE VIEW		
	Q MAX	L MAX	N MAX	U MIN
10SL	.898 [22.80]	2.024 [51.40]	.866 [22.00]	.339 [8.60]
14S	1.150 [29.20]	2.024 [51.40]	.984 [25.00]	.417 [10.60]
16S	1.299 [33.00]	2.102 [53.40]	1.102 [28.00]	.531 [13.50]
16	1.299 [33.00]	2.461 [62.50]	1.102 [28.00]	.531 [13.50]
18	1.437 [36.50]	2.508 [63.70]	1.220 [31.00]	.575 [14.60]
20	1.571 [39.90]	2.508 [63.70]	1.378 [35.00]	.728 [18.50]
22	1.697 [43.10]	2.508 [63.70]	1.496 [38.00]	.819 [20.80]
24	1.835 [46.60]	2.535 [64.40]	1.614 [41.00]	.969 [24.60]
28	2.102 [53.40]	2.535 [64.40]	1.890 [48.00]	1.063 [27.00]
32	2.366 [60.10]	2.598 [66.00]	2.126 [54.00]	1.311 [33.30]
36	2.610 [66.30]	2.598 [66.00]	2.402 [61.00]	1.516 [38.50]
40	2.850 [72.40]	2.598 [66.00]	2.677 [68.00]	1.811 [46.00]

Dimensions are in Inches [mm]

STRAIGHT PLUG

06ASBF*/06SBF*

FRONT VIEW

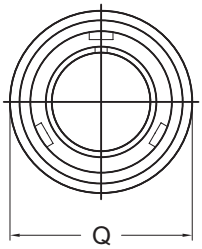

SIDE VIEW

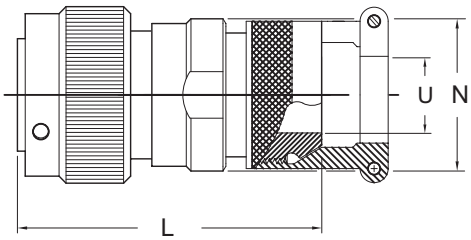

SCPB06ASBF* Environmental, no grommet
SCPB06SBF* Environmental with grommet

SHELL SIZE	FRONT VIEW	SIDE VIEW		
	Q MAX	L MAX	N MAX	U MIN
10SL	.898 [22.80]	2.024 [51.40]	.866 [22.00]	.339 [8.60]
14S	1.150 [29.20]	2.024 [51.40]	.984 [25.00]	.417 [10.60]
16S	1.299 [33.00]	2.102 [53.40]	1.102 [28.00]	.531 [13.50]
16	1.299 [33.00]	2.461 [62.50]	1.102 [28.00]	.531 [13.50]
18	1.437 [36.50]	2.508 [63.70]	1.220 [31.00]	.575 [14.60]
20	1.571 [39.90]	2.508 [63.70]	1.378 [35.00]	.728 [18.50]
22	1.697 [43.10]	2.508 [63.70]	1.496 [38.00]	.819 [20.80]
24	1.835 [46.60]	2.535 [64.40]	1.614 [41.00]	.969 [24.60]
28	2.102 [53.40]	2.535 [64.40]	1.890 [48.00]	1.063 [27.00]
32	2.366 [60.10]	2.598 [66.00]	2.126 [54.00]	1.311 [33.30]
36	2.610 [66.30]	2.598 [66.00]	2.402 [61.00]	1.516 [38.50]
40	2.850 [72.40]	2.598 [66.00]	2.677 [68.00]	1.811 [46.00]

Dimensions are in Inches [mm]

06ASBT*/06SBT*

FRONT VIEW

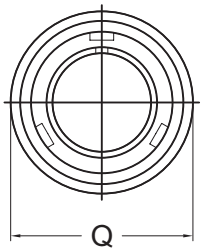

SIDE VIEW

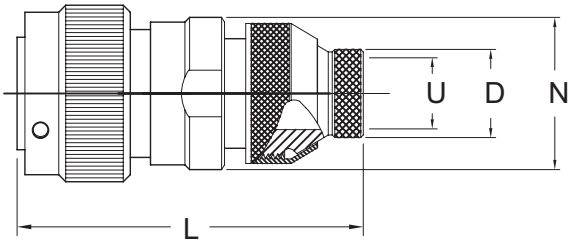

SCPB06ASBT* Environmental, no grommet
SCPB06SBT* Environmental with grommet

SHELL SIZE	FRONT VIEW		SIDE VIEW		
	Q MAX	D MAX	L MAX	N MAX	U MIN
10SL	.898 [22.80]	.437 [11.10]	2.402 [61.00]	.866 [22.00]	.299 [7.60]
14S	1.150 [29.20]	.563 [14.30]	2.520 [64.00]	.984 [25.00]	.425 [10.80]
16S	1.299 [33.00]	.626 [15.90]	2.756 [70.00]	1.102 [28.00]	.488 [12.40]
16	1.299 [33.00]	.626 [15.90]	3.150 [80.00]	1.102 [28.00]	.488 [12.40]
18	1.437 [36.50]	.752 [19.10]	3.150 [80.00]	1.220 [31.00]	.614 [15.60]
20	1.571 [39.90]	.878 [22.30]	3.150 [80.00]	1.378 [35.00]	.736 [18.70]
22	1.697 [43.10]	1.000 [25.40]	3.150 [80.00]	1.496 [38.00]	.862 [21.90]
24	1.835 [46.60]	1.126 [28.60]	3.150 [80.00]	1.614 [41.00]	.988 [25.10]
28	2.102 [53.40]	1.252 [31.80]	3.150 [80.00]	1.890 [48.00]	1.114 [28.30]
32	2.366 [60.10]	1.441 [36.60]	3.150 [80.00]	2.126 [54.00]	1.114 [28.30]
36	2.610 [66.30]	1.752 [44.50]	3.346 [85.00]	2.402 [61.00]	1.614 [41.00]
40	2.850 [72.40]	2.000 [50.80]	3.346 [85.00]	2.677 [68.00]	1.598 [40.60]

Dimensions are in Inches [mm]
1. Dimension "L" will vary from the values indicated for some special insert configurations.

SPACECRAFT COMPONENTS CORP.
3040 Clayton Street
North Las Vegas, NV 89032
Phone: 702.851.7600
Fax: 702.851.7620
Email: salesinfo@spacecraft.com
Web: www.spacecraft.com

06BC*

FRONT VIEW

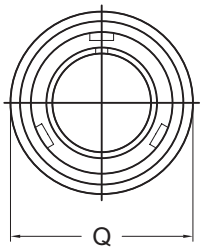

SIDE VIEW

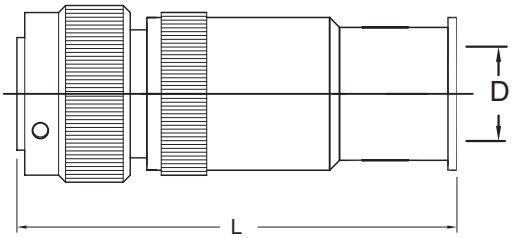

SCPB06BC* Environmental with grommet

SHELL SIZE	FRONT VIEW Q MAX	SIDE VIEW L
10SL	.898 [22.80]	Dimension L is dependent on the back-shell used, the cable range and the fitting used. **Consult factory.**
14S	1.150 [29.20]	
16S	1.299 [33.00]	
16	1.299 [33.00]	
18	1.437 [36.50]	
20	1.571 [39.90]	
22	1.697 [43.10]	
24	1.835 [46.60]	
28	2.102 [53.40]	
32	2.366 [60.10]	
36	2.610 [66.30]	
40	2.850 [72.40]	

CABLE RANGE		
SUFFIX IN PART NUMBER	CONDUIT INNER DIAMETER	D MAX.
(046)	.450 [11.40]	.300 [7.50]
(049)	.490 [12.50]	.300 [7.50]
(053)	.530 [13.50]	.410 [10.40]
(075)	.750 [19.10]	.630 [15.90]
(084)	.840 [21.30]	.690 [17.50]
(106)	1.060 [26.90]	.940 [23.90]
(110)	1.100 [27.90]	1.010 [25.60]
(122)	1.220 [31.00]	1.130 [28.60]
(138)	1.380 [35.10]	1.160 [29.40]
(157)	1.570 [39.90]	1.490 [37.80]
(197)	1.970 [50.00]	1.780 [45.20]

Dimensions are in Inches [mm]

06CF*/06CFZ*

FRONT VIEW

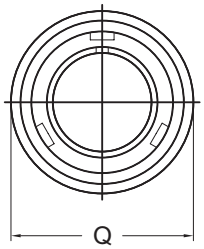

SIDE VIEW

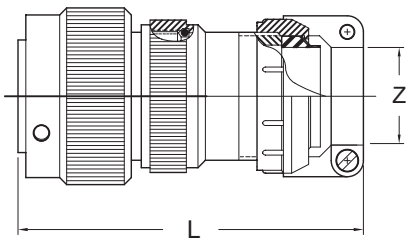

SCPB06CF* Environmental, no grommet
SCPB06CFZ* Environmental with grommet

SHELL SIZE	FRONT VIEW Q MAX	SIDE VIEW L MAX	Z OPEN	Z CLOSED
10SL	.898 [22.80]	2.874 [73.00]	.312 [7.93]	.094 [2.38]
14S	1.150 [29.20]	3.031 [77.00]	.438 [11.12]	.230 [5.84]
16S	1.299 [33.00]	3.031 [77.00]	.531 [13.48]	.315 [8.00]
16	1.299 [33.00]	3.465 [88.00]	.531 [13.48]	.315 [8.00]
18	1.437 [36.50]	3.583 [91.00]	.625 [15.87]	.378 [9.60]
20	1.571 [39.90]	3.583 [91.00]	.748 [19.00]	.445 [11.30]
22	1.697 [43.10]	3.622 [92.00]	.748 [19.00]	.445 [11.30]
24	1.835 [46.60]	3.819 [97.00]	.937 [23.80]	.610 [15.50]
28	2.102 [53.40]	4.055 [103.00]	.937 [23.80]	.610 [15.50]
32	2.366 [60.10]	4.449 [113.00]	1.250 [31.75]	.921 [23.40]
36	2.610 [66.30]	4.724 [120.00]	1.378 [35.00]	.921 [23.40]
40	2.850 [72.40]	5.315 [135.00]	1.624 [41.25]	1.177 [29.90]

Dimensions are in Inches [mm]

STRAIGHT PLUG

06CFGG*/06CFZGG*

FRONT VIEW

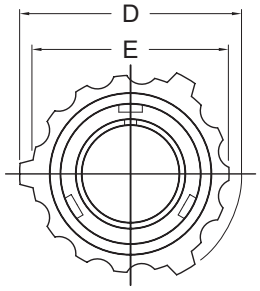

SIDE VIEW

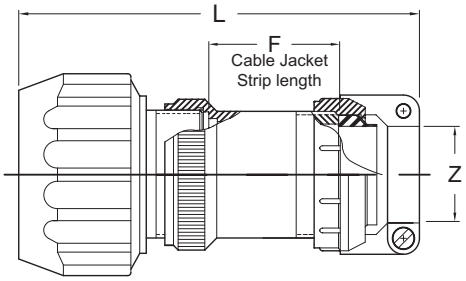

SCPB06CFGG* Environmental, no grommet
SCPB06CFZGG* Environmental with grommet

SHELL SIZE	FRONT VIEW		SIDE VIEW			
	D DIA.	E DIA.	F APPROX. NOTE 1	L MAX.	Z	
					OPEN	CLOSED
10SL	1.319 [33.50]	1.122 [28.50]	.551 [14.00]	3.646 [92.60]	.312 [7.93]	.094 [2.38]
14S	1.583 [40.20]	1.280 [32.50]	.732 [18.60]	3.646 [92.60]	.438 [11.12]	.230 [5.84]
16S	* [*]	* [*]	* [*]	* [*]	.531 [13.48]	.315 [8.00]
16	* [*]	* [*]	* [*]	* [*]	.531 [13.48]	.315 [8.00]
18	1.929 [49.00]	1.713 [43.50]	.701 [17.80]	4.315 [109.60]	.625 [15.87]	.378 [9.60]
20	2.028 [51.50]	1.811 [46.00]	.705 [17.90]	4.354 [110.60]	.748 [19.00]	.445 [11.30]
22	2.224 [56.50]	1.988 [50.50]	.744 [18.90]	4.354 [110.60]	.748 [19.00]	.445 [11.30]
24	2.362 [60.00]	2.126 [54.00]	.689 [17.50]	4.787 [121.60]	.937 [23.80]	.610 [15.50]
28	2.638 [67.00]	2.402 [61.00]	.921 [23.40]	4.787 [121.60]	.937 [23.80]	.610 [15.50]
32	2.992 [76.00]	2.661 [67.60]	1.016 [25.80]	5.142 [130.60]	1.250 [31.75]	.921 [23.40]
36	3.240 [82.30]	2.925 [74.30]	1.031 [26.20]	5.417 [137.60]	1.378 [35.00]	.921 [23.40]
40	3.465 [88.00]	3.150 [80.00]	1.614 [41.00]	5.807 [147.50]	1.624 [41.25]	1.177 [29.90]

Dimensions are in Inches [mm]
* Consult factory for dimensions.
Note 1. Dimensions "L" and "F" will vary from the values indicated with escalating or de-escalating backshells and some special insert arrangements. Consult factory for verification.

06CMEG*

FRONT VIEW

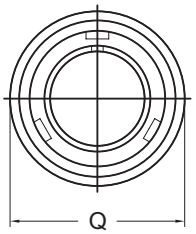

SIDE VIEW

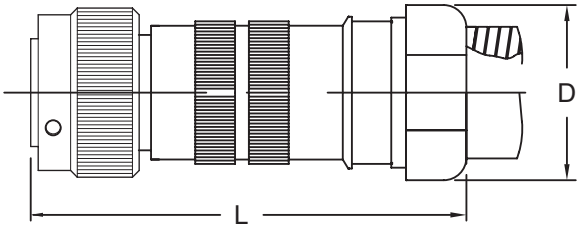

SCPB06CMEG* Environmental with grommet

SHELL SIZE	FRONT VIEW	SIDE VIEW
	Q MAX	L
10SL	.898 [22.80]	Dimension L is dependent on the back-shell used, the cable range and the fitting used. **Consult factory.**
14S	1.150 [29.20]	
16S	1.299 [33.00]	
16	1.299 [33.00]	
18	1.437 [36.50]	
20	1.571 [39.90]	
22	1.697 [43.10]	
24	1.835 [46.60]	
28	2.102 [53.40]	
32	2.366 [60.10]	
36	2.610 [66.30]	
40	2.850 [72.40]	

Dimensions are in Inches [mm]

CONDUIT SIZE			
CABLE CODE	ELECTRI-FLEX CONDUIT TRADE SIZE	SHELL SIZE	D APRX.
075	3/4	20	1.65 [41.9]
		24	1.65 [41.9]
		36	1.65 [41.9]
100	100	20	1.88 [47.6]

For other sizes, consult factory

SPACECRAFT COMPONENTS CORP.
3040 Clayton Street
North Las Vegas, NV 89032
Phone: 702.851.7600
Fax: 702.851.7620
Email: salesinfo@spacecraft.com
Web: www.spacecraft.com

06LA*/06LR*

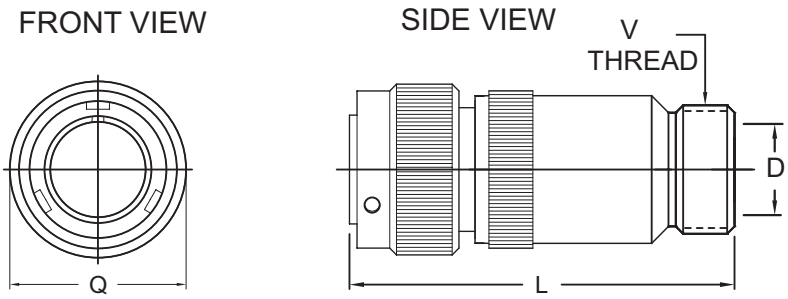

SCPB06LA* **Non-environmental, no grommet**
SCPB06LR* **Environmental with grommet**

SHELL SIZE	FRONT VIEW	SIDE VIEW		
	Q MAX	D MIN.	L MAX.	V THREAD CLASS 2A
10SL	.898 [22.80]	.323 [8.20]	2.795 [71.00]	5/8-24 UNEF
14S	1.150 [29.20]	.437 [11.10]	2.795 [71.00]	3/4-20 UNEF
16S	1.299 [33.00]	.563 [14.30]	2.795 [71.00]	7/8-20 UNEF
16	1.299 [33.00]	.563 [14.30]	3.425 [87.00]	7/8-20 UNEF
18	1.437 [36.50]	.657 [16.70]	3.425 [87.00]	1-20 UNEF
20	1.571 [39.90]	.780 [19.80]	3.425 [87.00]	1 3/16-18 UNEF
22	1.697 [43.10]	.780 [19.80]	3.425 [87.00]	1 3/16-18 UNEF
24	1.835 [46.60]	1.000 [25.40]	3.425 [87.00]	1 7/16-18 UNEF
28	2.102 [53.40]	1.063 [27.00]	3.740 [95.00]	1 7/16-18 UNEF
32	2.366 [60.10]	1.280 [32.50]	3.740 [95.00]	1 3/4-18 UNS
36	2.610 [66.30]	1.406 [35.70]	3.740 [95.00]	2-18 UNS
40	2.850 [72.40]	1.772 [45.00]	3.740 [95.00]	2 1/4-16 UN

Dimensions are in Inches [mm]

06LAF*/06LF*

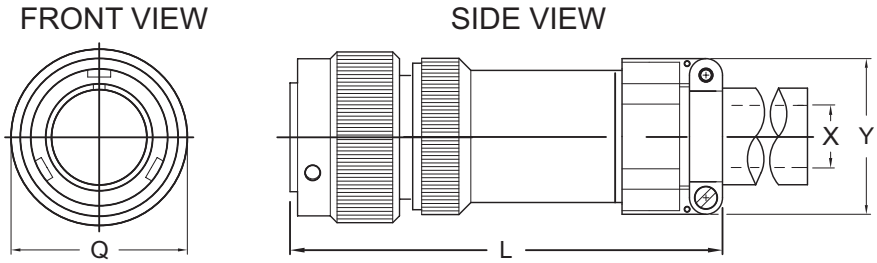

SCPB06LAF* **Non-environmental, no grommet**
SCPB06LF* **Environmental with grommet**

SHELL SIZE	FRONT VIEW	SIDE VIEW		
	Q MAX	L MAX	X MIN	Y MAX
10SL	.898 [22.80]	3.622 [92.00]	.220 [5.60]	.894 [22.70]
14S	1.150 [29.20]	3.661 [93.00]	.311 [7.90]	1.083 [27.50]
16S	1.299 [33.00]	3.740 [95.00]	.433 [11.00]	1.181 [30.00]
16	1.299 [33.00]	4.370 [111.00]	.433 [11.00]	1.181 [30.00]
18	1.437 [36.50]	4.370 [111.00]	.559 [14.20]	1.268 [32.20]
20	1.571 [39.90]	4.370 [111.00]	.622 [15.80]	1.476 [37.50]
22	1.697 [43.10]	4.370 [111.00]	.622 [15.80]	1.476 [37.50]
24	1.835 [46.60]	4.449 [113.00]	.748 [19.00]	1.705 [43.30]
28	2.102 [53.40]	4.764 [121.00]	.748 [19.00]	1.705 [43.30]
32	2.366 [60.10]	4.843 [123.00]	.937 [23.80]	2.035 [51.70]
36	2.610 [66.30]	4.921 [125.00]	1.248 [31.70]	2.283 [58.00]
40	2.850 [72.40]	5.433 [138.00]	1.374 [34.90]	2.579 [65.50]

Dimensions are in Inches [mm]

STRAIGHT PLUG

06LC*/06LCG*

FRONT VIEW

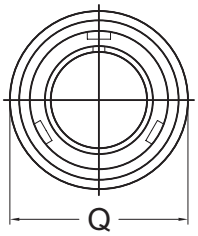

SIDE VIEW

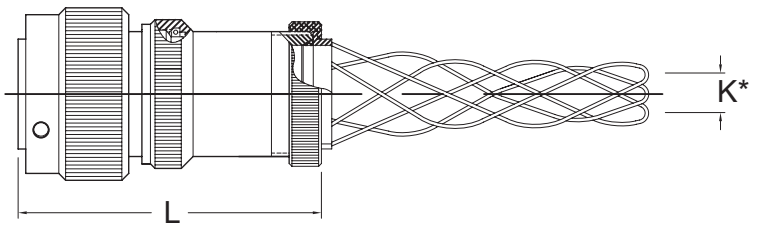

SCPB06LC* **Environmental with grommet**
SCPB06LCG* **Environmental, no grommet**

SHELL SIZE	FRONT VIEW	SIDE VIEW
	Q MAX	L MAX
10SL	.898 [22.80]	3.937 [100.00]
14S	1.150 [29.20]	3.937 [100.00]
16S	1.299 [33.00]	3.937 [100.00]
16	1.299 [33.00]	4.331 [110.00]
18	1.437 [36.50]	4.331 [110.00]
20	1.571 [39.90]	4.567 [116.00]
22	1.697 [43.10]	4.567 [116.00]
24	1.835 [46.60]	4.724 [120.00]
28	2.102 [53.40]	5.079 [129.00]
32	2.366 [60.10]	5.709 [145.00]
36	2.610 [66.30]	5.709 [145.00]
40	2.850 [72.40]	5.709 [145.00]

K*	CABLE RANGE	
	MIN	MAX
K0	.250 [6.35]	.375 [9.53]
K1	.375 [9.53]	.500 [12.70]
K2	.500 [12.70]	.625 [15.87]
K3	.625 [15.87]	.750 [19.05]
K4	.750 [19.05]	.875 [22.23]
K5	.875 [22.23]	1.000 [25.40]
K6	1.000 [25.40]	1.120 [28.45]
K7	1.120 [28.45]	1.250 [31.75]
K8	1.290 [32.77]	1.500 [38.10]
K9	1.560 [39.62]	1.625 [41.28]
K10	1.625 [41.28]	1.750 [44.45]

Dimensions are in Inches [mm]
1. Dimension "L" will vary from the values indicated with escalating or de-escalating backshells and some special insert configurations.

06LCGG*/06LCGGG*

FRONT VIEW

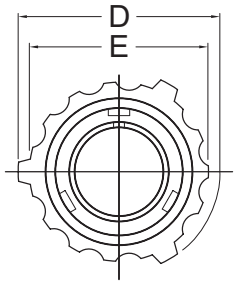

SIDE VIEW

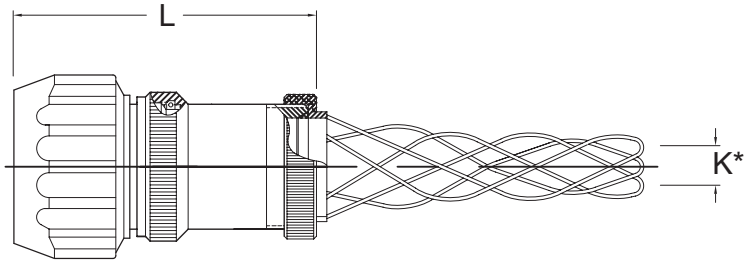

SCPB06LCGG* **Environmental with grommet**
SCPB06LCGGG* **Environmental, no grommet**

SHELL SIZE	FRONT VIEW		SIDE VIEW
	D DIA.	E DIA.	L MAX
10SL	1.319 [33.50]	1.122 [28.50]	4.077 [103.60]
14S	1.583 [40.20]	1.280 [32.50]	4.077 [103.60]
16S	* [*]	* [*]	4.077 [103.60]
16	* [*]	* [*]	4.471 [113.60]
18	1.929 [49.00]	1.713 [43.50]	4.471 [113.60]
20	2.028 [51.50]	1.811 [46.00]	4.707 [119.60]
22	2.224 [56.50]	1.988 [50.50]	4.707 [119.60]
24	2.362 [60.00]	2.126 [54.00]	4.864 [123.50]
28	2.638 [67.00]	2.402 [61.00]	5.219 [132.60]
32	2.992 [76.00]	2.661 [67.60]	5.849 [148.60]
36	3.240 [82.30]	2.925 [74.30]	5.849 [148.60]
40	3.465 [88.00]	3.150 [80.00]	5.849 [148.60]

K*	CABLE RANGE	
	MIN	MAX
K0	.250 [6.35]	.375 [9.53]
K1	.375 [9.53]	.500 [12.70]
K2	.500 [12.70]	.625 [15.87]
K3	.625 [15.87]	.750 [19.05]
K4	.750 [19.05]	.875 [22.23]
K5	.875 [22.23]	1.000 [25.40]
K6	1.000 [25.40]	1.120 [28.45]
K7	1.120 [28.45]	1.250 [31.75]
K8	1.290 [32.77]	1.500 [38.10]
K9	1.560 [39.62]	1.625 [41.28]
K10	1.625 [41.28]	1.750 [44.45]

Dimensions are in Inches [mm]
* Consult factory for dimensions.

SPACECRAFT COMPONENTS CORP.
3040 Clayton Street
North Las Vegas, NV 89032
Phone: 702.851.7600
Fax: 702.851.7620
Email: salesinfo@spacecraft.com
Web: www.spacecraft.com

06LCF*/06LCFZ*

FRONT VIEW

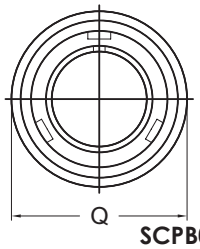

SIDE VIEW

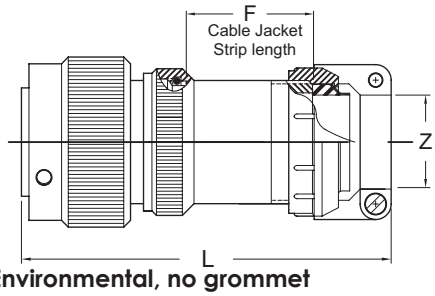

SCPB06LCF* Environmental, no grommet
SCPB06LCFZ* Environmental with grommet

SHELL SIZE	FRONT VIEW	SIDE VIEW			
	Q MAX	F REF	L MAX	Z OPEN	Z CLOSED
10SL	.898 [22.80]	1.654 [42.00]	3.976 [101.00]	.312 [7.93]	.094 [2.38]
14S	1.150 [29.20]	1.677 [42.60]	3.976 [101.00]	.438 [11.12]	.230 [5.84]
16S	1.299 [33.00]	1.677 [42.60]	3.976 [101.00]	.531 [13.48]	.315 [8.00]
16	1.299 [33.00]	1.677 [42.60]	4.488 [114.00]	.531 [13.48]	.315 [8.00]
18	1.437 [36.50]	1.803 [45.80]	4.685 [119.00]	.625 [15.87]	.378 [9.60]
20	1.571 [39.90]	1.807 [45.90]	4.685 [119.00]	.748 [19.00]	.445 [11.30]
22	1.697 [43.10]	1.807 [45.90]	4.685 [119.00]	.748 [19.00]	.445 [11.30]
24	1.835 [46.60]	1.752 [44.50]	4.882 [124.00]	.937 [23.80]	.610 [15.50]
28	2.102 [53.40]	1.949 [49.50]	5.118 [130.00]	.937 [23.80]	.610 [15.50]
32	2.366 [60.10]	1.953 [49.60]	5.394 [137.00]	1.250 [31.75]	.921 [23.40]
36	2.610 [66.30]	1.969 [50.00]	5.669 [144.00]	1.378 [35.00]	.921 [23.40]
40	2.850 [72.40]	1.969 [50.00]	5.669 [144.00]	1.624 [41.25]	1.177 [29.90]

Dimensions are in Inches [mm]

06LCFGG*/06LCFZGG*

FRONT VIEW

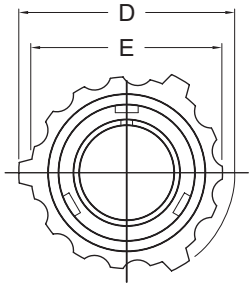

SIDE VIEW

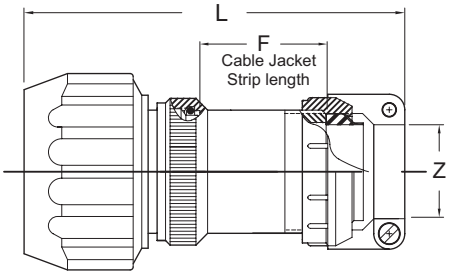

SCPB06LCFGG* Environmental, no grommet
SCPB06LCFZGG* Environmental with grommet

SHELL SIZE	FRONT VIEW		SIDE VIEW			
	D DIA.	E DIA.	F REF	L MAX	Z OPEN	Z CLOSED
10SL	1.319 [33.50]	1.122 [28.50]	1.654 [42.00]	4.114 [104.50]	.312 [7.93]	.094 [2.38]
14S	1.583 [40.20]	1.280 [32.50]	1.677 [42.60]	4.114 [104.50]	.438 [11.12]	.230 [5.84]
16S	* [*]	* [*]	1.677 [42.60]	4.114 [104.50]	.531 [13.48]	.315 [8.00]
16	* [*]	* [*]	1.677 [42.60]	4.630 [117.60]	.531 [13.48]	.315 [8.00]
18	1.929 [49.00]	1.713 [43.50]	1.803 [45.80]	4.827 [122.60]	.625 [15.87]	.378 [9.60]
20	2.028 [51.50]	1.811 [46.00]	1.807 [45.90]	4.827 [122.60]	.748 [19.00]	.445 [11.30]
22	2.224 [56.50]	1.988 [50.50]	1.807 [45.90]	4.827 [122.60]	.748 [19.00]	.445 [11.30]
24	2.362 [60.00]	2.126 [54.00]	1.752 [44.50]	5.024 [127.60]	.937 [23.80]	.610 [15.50]
28	2.638 [67.00]	2.402 [61.00]	1.949 [49.50]	5.260 [133.60]	.937 [23.80]	.610 [15.50]
32	2.992 [76.00]	2.661 [67.60]	1.953 [49.60]	5.535 [140.60]	1.250 [31.75]	.921 [23.40]
36	3.240 [82.30]	2.925 [74.30]	1.969 [50.00]	5.807 [147.50]	1.378 [35.00]	.921 [23.40]
40	3.465 [88.00]	3.150 [80.00]	1.969 [50.00]	5.807 [147.50]	1.624 [41.25]	1.177 [29.90]

Dimensions are in Inches [mm]

STRAIGHT PLUG

06NM*/06NMG*

FRONT VIEW

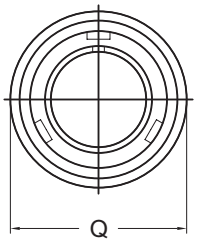

SIDE VIEW

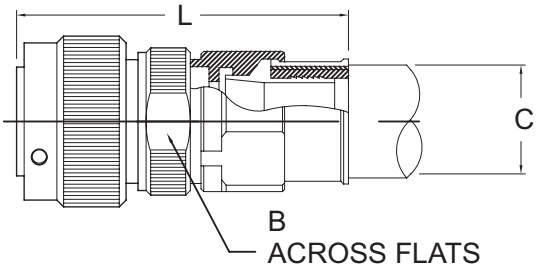

SCPB06NM* **Environmental with grommet**
SCPB06NMG* **Environmental, no grommet**

SHELL SIZE	FRONT VIEW Q MAX	SIDE VIEW B ACROSS FLATS	SIDE VIEW L
10SL	.898 [22.80]	.701 [17.80]	Dimension L is dependent on the back-shell used, the cable range and the fitting used. **Consult factory.**
14S	1.150 [29.20]	.937 [23.80]	
16S	1.299 [33.00]	1.000 [25.40]	
16	1.299 [33.00]	1.000 [25.40]	
18	1.437 [36.50]	1.126 [28.60]	
20	1.571 [39.90]	1.248 [31.70]	
22	1.697 [43.10]	1.374 [34.90]	
24	1.835 [46.60]	1.500 [38.10]	
28	2.102 [53.40]	1.748 [44.40]	
32	2.366 [60.10]	2.000 [50.80]	
36	2.610 [66.30]	2.248 [57.10]	
40	2.850 [72.40]	2.437 [61.90]	

Dimensions are in Inches [mm]

CODE (***)	AVAILABLE CONDUIT SIZES C
(038)	3/8 [9.52]
(050)	1/2 [12.70]
(075)	3/4 [19.05]
(100)	1 [25.40]
(125)	1 1/4 [31.75]
(150)	1 1/2 [38.10]
(200)	2 [50.80]

(***) Conduit Size must be specified as part of the connector part number using Conduit Code

06SL*/06SL1*

FRONT VIEW

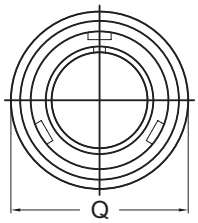

SIDE VIEW

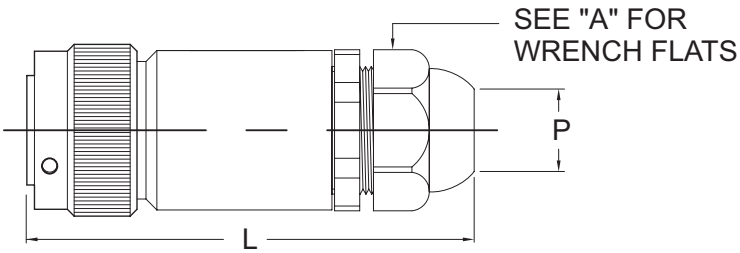

SCPB06SL* **Environmental, no grommet**
SCPB06SL1* **Environmental with grommet**

SHELL SIZE	FRONT VIEW Q DIA. MAX.	SIDE VIEW L
10SL	.898 [22.80]	Dimension L is dependent on the back-shell used, the cable range and the fitting used. **Consult factory.**
14S	1.150 [29.20]	
16S	1.299 [33.00]	
16	1.299 [33.00]	
18	1.437 [36.50]	
20	1.571 [39.90]	
22	1.697 [43.10]	
24	1.835 [46.60]	
28	2.102 [53.40]	
32	2.366 [60.10]	
36	2.610 [66.30]	
40	2.850 [72.40]	

Dimensions are in Inches [mm]

CABLE RANGE CODE			
(XX) CABLE CODE NO STRAIN RELIEF	TYPE	P CABLE RANGE	A WRENCH FLATS
07R	PG7	0.08-0.20 [2.0-5.0]	.591 [15.0]
07	PG7	0.12-0.26 [3.0-6.5]	.591 [15.0]
09R	PG9	0.08-0.24 [2.0-6.0]	.748 [19.0]
09	PG9	0.16-0.31 [4.0-8.0]	.748 [19.0]
11R	PG11	0.12-0.28 [3.0-7.0]	.866 [22.0]
11	PG11	0.20-0.39 [5.0-10.0]	.866 [22.0]
13R	PG13.5	0.20-0.35 [5.0-9.0]	.945 [24.0]
13	PG13.5	0.24-0.47 [6.0-12.0]	.945 [24.0]
16R	PG16	0.28-0.47 [7.0-12.0]	1.063 [27.0]
16	PG16	0.39-0.55 [10.0-14.0]	1.063 [27.0]
21R	PG21	0.35-0.63 [9.0-16.0]	1.299 [33.0]
21	PG21	0.51-0.71 [13.0-18.0]	1.299 [33.0]
29R	PG29	0.47-0.79 [12.0-20.0]	1.654 [42.0]
29	PG29	0.71-0.98 [18.0-25.0]	1.654 [42.0]
36R	PG36	0.79-1.02 [20.0-26.0]	2.087 [53.0]
36	PG36	0.87-1.26 [22.0-32.0]	2.087 [53.0]
42	PG42	1.18-1.50 [30.0-38.0]	2.362 [60.0]
48	PG48	1.34-1.73 [34.0-44.0]	2.559 [65.0]

SPACECRAFT COMPONENTS CORP.
3040 Clayton Street
North Las Vegas, NV 89032
Phone: 702.851.7600
Fax: 702.851.7620
Email: salesinfo@spacecraft.com
Web: www.spacecraft.com

06SLX*/06SLX1*

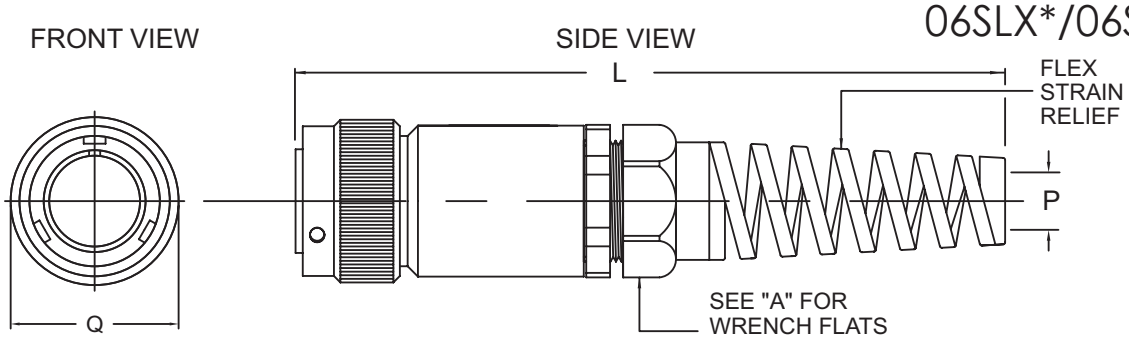

SCPB06SLX* **Environmental, no grommet**
SCPB06SLX1* **Environmental with grommet**

SHELL SIZE	FRONT VIEW Q DIA. MAX.	SIDE VIEW L
10SL	.898 [22.80]	Dimension L is dependent on the back-shell used, the cable range and the fitting used. **Consult factory.**
14S	1.150 [29.20]	
16S	1.299 [33.00]	
16	1.299 [33.00]	
18	1.437 [36.50]	
20	1.571 [39.90]	
22	1.697 [43.10]	
24	1.835 [46.60]	
28	2.102 [53.40]	
32	2.366 [60.10]	
36	2.610 [66.30]	
40	2.850 [72.40]	

Dimensions are in Inches [mm]

CABLE RANGE CODE			
(XX) CABLE CODE NO STRAIN RELIEF	TYPE	P CABLE RANGE	A WRENCH FLATS
07R	PG7	0.08-0.20 [2.0-5.0]	.591 [15.0]
07	PG7	0.12-0.26 [3.0-6.5]	.591 [15.0]
09R	PG9	0.08-0.24 [2.0-6.0]	.748 [19.0]
09	PG9	0.16-0.31 [4.0-8.0]	.748 [19.0]
11R	PG11	0.12-0.28 [3.0-7.0]	.866 [22.0]
11	PG11	0.20-0.39 [5.0-10.0]	.866 [22.0]
13R	PG13.5	0.20-0.35 [5.0-9.0]	.945 [24.0]
13	PG13.5	0.24-0.47 [6.0-12.0]	.945 [24.0]
16R	PG16	0.28-0.47 [7.0-12.0]	1.063 [27.0]
16	PG16	0.39-0.55 [10.0-14.0]	1.063 [27.0]
21R	PG21	0.35-0.63 [9.0-16.0]	1.299 [33.0]
21	PG21	0.51-0.71 [13.0-18.0]	1.299 [33.0]
29R	PG29	0.47-0.79 [12.0-20.0]	1.654 [42.0]
29	PG29	0.71-0.98 [18.0-25.0]	1.654 [42.0]
36R	PG36	0.79-1.02 [20.0-26.0]	2.087 [53.0]
36	PG36	0.87-1.26 [22.0-32.0]	2.087 [53.0]
42	PG42	1.18-1.50 [30.0-38.0]	2.362 [60.0]
48	PG48	1.34-1.73 [34.0-44.0]	2.559 [65.0]

06STG*/06ST*

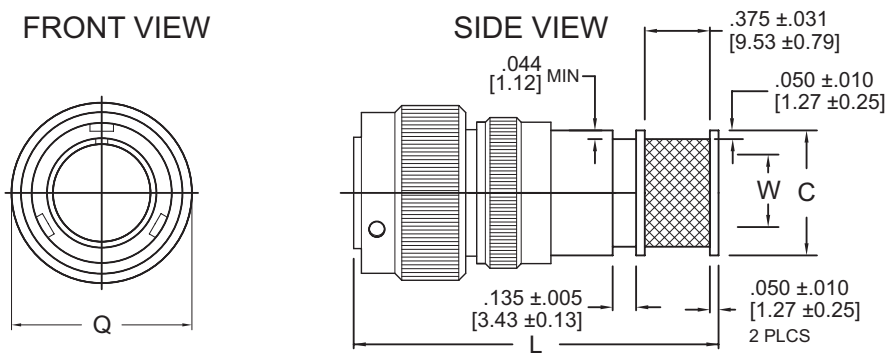

SCPB06STG* **Environmental, no grommet with spin coupling nut backshell**
SCPB06ST* **Environmental with grommet with spin coupling nut backshell**

SHELL SIZE	FRONT VIEW Q MAX	SIDE VIEW C MAX	L MAX	W MIN
10SL	.898 [22.80]	.500 [12.70]	2.402 [61.00]	.312 [7.92]
14S	1.150 [29.20]	.630 [16.00]	2.425 [61.60]	.440 [11.18]
16S	1.299 [33.00]	.700 [17.78]	2.402 [61.00]	.500 [12.70]
16	1.299 [33.00]	.700 [17.78]	2.626 [66.70]	.500 [12.70]
18	1.437 [36.50]	.810 [20.57]	2.626 [66.70]	.625 [15.87]
20	1.571 [39.90]	.810 [20.57]	2.626 [66.70]	.625 [15.87]
22	1.697 [43.10]	.870 [22.10]	2.626 [66.70]	.690 [17.53]
24	1.835 [46.60]	.940 [23.87]	2.701 [68.60]	.750 [19.05]
28	2.102 [53.40]	1.059 [26.90]	2.701 [68.60]	.875 [22.23]
32	2.366 [60.10]	Consult Sales	Consult Sales	Consult Sales
36	2.610 [66.30]			
40	2.850 [72.40]			

Dimensions are in Inches [mm]

STRAIGHT PLUG

06SUG*/06SU*

FRONT VIEW

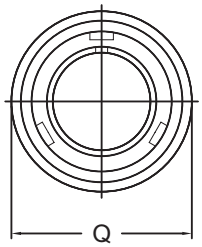

SIDE VIEW

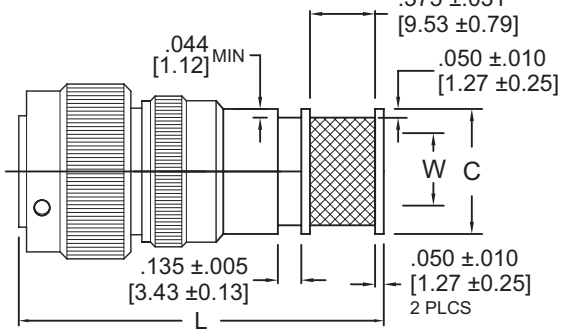

SCPB06SUG* **Environmental, no grommet with solid backshell**
SCPB06SU* **Environmental with grommet with solid backshell**

SHELL SIZE	FRONT VIEW	SIDE VIEW		
	Q MAX	C MAX	L MAX	W MIN
10SL	.898 [22.80]	.500 [12.70]	2.402 [61.00]	.312 [7.92]
14S	1.150 [29.20]	.630 [16.00]	2.425 [61.60]	.440 [11.18]
16S	1.299 [33.00]	.700 [17.78]	2.402 [61.00]	.500 [12.70]
16	1.299 [33.00]	.700 [17.78]	2.626 [66.70]	.500 [12.70]
18	1.437 [36.50]	.810 [20.57]	2.626 [66.70]	.625 [15.87]
20	1.571 [39.90]	.810 [20.57]	2.626 [66.70]	.625 [15.87]
22	1.697 [43.10]	.870 [22.10]	2.626 [66.70]	.690 [17.53]
24	1.835 [46.60]	.940 [23.87]	2.701 [68.60]	.750 [19.05]
28	2.102 [53.40]	1.059 [26.90]	2.701 [68.60]	.875 [22.23]
32	2.366 [60.10]	Consult Sales	Consult Sales	Consult Sales
36	2.610 [66.30]			
40	2.850 [72.40]			

Dimensions are in Inches [mm]

06SV*

FRONT VIEW

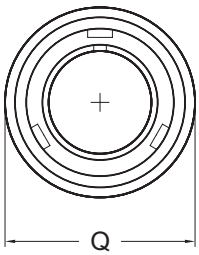

SIDE VIEW

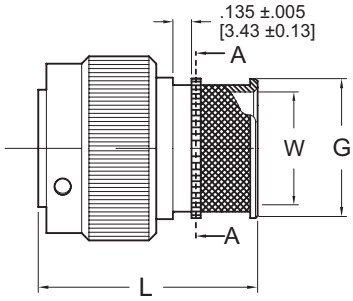

SHELL SIZES:
10SL, 14S & 16S
0.250 ±.005
[6.35 ±0.13]
FOR .125 BAND

SHELL SIZES:
16 -40
0.360 ±.005
[9.14 ±0.13]
FOR .240 BAND

SCPB06SV* **Environmental, no grommet**
SCPBG06SV* **Environmental, no grommet with grounding spring**

SHELL SIZE	FRONT VIEW	SIDE VIEW				
	Q MAX	G ±.008 [±0.2]	L MAX	W MIN	X ±.016 [±0.4]	
					.240 BAND	.125 BAND
10SL	.898 [22.80]	.634 [16.10]	1.400 [35.56]	.476 [12.10]	–	.311 [7.90]
14S	1.150 [29.20]	.756 [19.20]	1.400 [35.56]	.606 [15.40]	–	.311 [7.90]
16S	1.299 [33.00]	.882 [22.40]	1.400 [35.56]	.736 [18.70]	–	.311 [7.90]
16	1.299 [33.00]	.882 [22.40]	1.725 [43.82]	.736 [18.70]	.185 [4.70]	–
18	1.437 [36.50]	1.004 [25.50]	1.725 [43.82]	.862 [21.90]	.185 [4.70]	–
20	1.571 [39.90]	1.130 [28.70]	1.725 [43.82]	.976 [24.80]	.185 [4.70]	–
22	1.697 [43.10]	1.256 [31.90]	1.725 [43.82]	1.106 [28.10]	.185 [4.70]	–
24	1.835 [46.60]	1.382 [35.10]	1.725 [43.82]	1.228 [31.20]	.185 [4.70]	–
28	2.102 [53.40]	1.630 [41.40]	1.725 [43.82]	1.413 [35.90]	.185 [4.70]	–
32	2.366 [60.10]	1.882 [47.80]	1.725 [43.82]	1.697 [43.10]	.185 [4.70]	–
36	2.610 [66.30]	2.067 [52.50]	1.725 [43.82]	1.890 [48.00]	.185 [4.70]	–
40	2.850 [72.40]	2.319 [58.90]	1.725 [43.82]	2.118 [53.80]	.185 [4.70]	–

Dimensions are in Inches [mm]

SPACECRAFT COMPONENTS CORP.
3040 Clayton Street
North Las Vegas, NV 89032
Phone: 702.851.7600
Fax: 702.851.7620
Email: salesinfo@spacecraft.com
Web: www.spacecraft.com

06TRAC*

FRONT VIEW

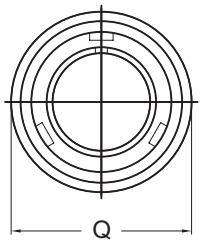

SIDE VIEW

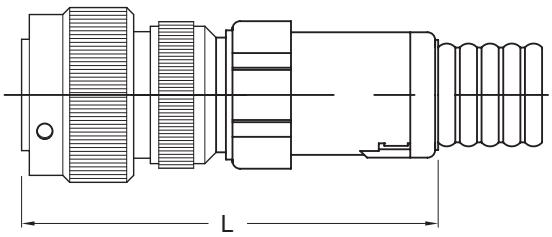

SCPB06TRAC* Environmental with grommet

SHELL SIZE	FRONT VIEW Q MAX	SIDE VIEW L
10SL	.898 [22.80]	Dimension L is dependent on the back-shell used, the cable range and the fitting used. **Consult factory.**
14S	1.150 [29.20]	
16S	1.299 [33.00]	
16	1.299 [33.00]	
18	1.437 [36.50]	
20	1.571 [39.90]	
22	1.697 [43.10]	
24	1.835 [46.60]	
28	2.102 [53.40]	
32	2.366 [60.10]	
36	2.610 [66.30]	
40	2.850 [72.40]	

Dimensions are in Inches [mm]

06WK*/06WKG*

FRONT VIEW

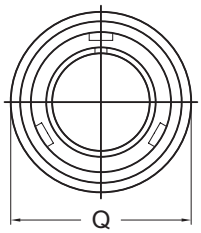

SIDE VIEW

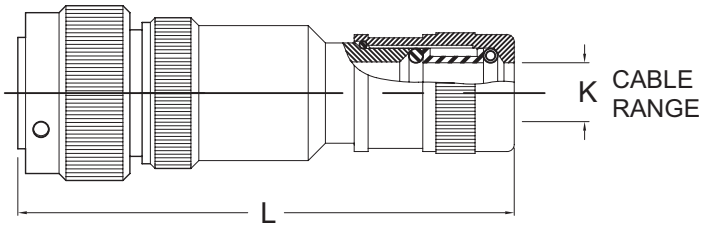

SCPB06WK* Environmental with grommet
SCPB06WKG* Environmental, no grommet

SHELL SIZE	FRONT VIEW Q MAX	SIDE VIEW L1 MAX
10SL	.898 [22.80]	4.370 [111.00]
14S	1.150 [29.20]	4.409 [112.00]
16S	1.299 [33.00]	3.937 [100.00]
16	1.299 [33.00]	4.331 [110.00]
18	1.437 [36.50]	5.000 [127.00]
20	1.571 [39.90]	5.000 [127.00]
22	1.697 [43.10]	5.236 [133.00]
24	1.835 [46.60]	5.276 [134.00]
28	2.102 [53.40]	5.276 [134.00]
32	2.366 [60.10]	5.354 [136.00]
36	2.610 [66.30]	5.354 [136.00]
40	2.850 [72.40]	5.354 [136.00]

Dimensions are in Inches [mm]
1. Dimension "L" will vary from the values indicated with escalating or de-escalating back-shells and some special insert configurations.

(**) CABLE RANGE CODE	K MIN	K MAX
01	.063 [1.59]	.125 [3.18]
02	.125 [3.18]	.250 [6.35]
03	.250 [6.35]	.375 [9.53]
04	.375 [9.53]	.500 [12.70]
05	.500 [12.70]	.625 [15.88]
06	.625 [15.88]	.750 [19.05]
07	.750 [19.05]	.875 [22.23]
08	.875 [22.23]	1.000 [25.40]
09	1.000 [25.40]	1.125 [28.58]
10	1.125 [28.58]	1.250 [31.75]
11	1.250 [31.75]	1.375 [34.93]
12	1.375 [34.93]	1.500 [38.10]
13	1.500 [38.10]	1.623 [41.23]
14	1.623 [41.23]	1.750 [44.45]
15	1.750 [44.45]	1.875 [47.63]
16	1.875 [47.63]	2.000 [50.80]

(**) Cable Range must be specified as part of the connector part number using Cable Range Code.

PANEL MOUNT PLUG

064PP*

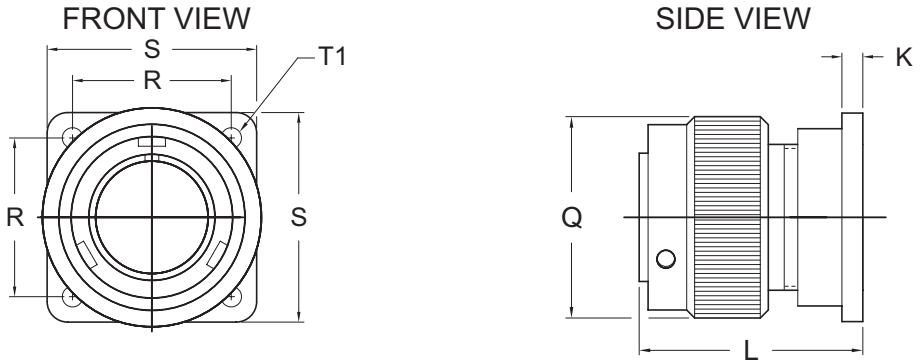

SCPB064PP* Environmental when used with sealing gasket

SHELL SIZE	FRONT VIEW			SIDE VIEW		
	R ±.004 [±0.1]	S ±.031 [±0.8]	T1 +.008 [+0.2] -.004 [-0.1]	K +.020 [+0.5] -.008 [-0.2]	L MAX.	Q MAX.
10SL	.717 [18.20]	1.000 [25.40]	.126 [3.20]	.110 [2.80]	1.177 [29.90]	.898 [22.80]
14S	.906 [23.00]	1.181 [30.00]	.126 [3.20]	.126 [3.20]	1.177 [29.90]	1.150 [29.20]
16S	.969 [24.60]	1.280 [32.50]	.126 [3.20]	.126 [3.20]	1.382 [35.10]	1.299 [33.00]
16	.969 [24.60]	1.280 [32.50]	.126 [3.20]	.126 [3.20]	1.382 [35.10]	1.299 [33.00]
18	1.063 [27.00]	1.378 [35.00]	.126 [3.20]	.126 [3.20]	1.583 [40.20]	1.437 [36.50]
20	1.157 [29.40]	1.496 [38.00]	.126 [3.20]	.126 [3.20]	1.724 [43.80]	1.571 [39.90]
22	1.252 [31.80]	1.614 [41.00]	.126 [3.20]	.150 [3.80]	1.724 [43.80]	1.697 [43.10]
24	1.374 [34.90]	1.752 [44.50]	.146 [3.70]	.150 [3.80]	1.724 [43.80]	1.835 [46.60]
28	1.563 [39.70]	2.000 [50.80]	.146 [3.70]	.157 [4.00]	1.732 [44.00]	2.102 [53.40]
32	1.752 [44.50]	2.244 [57.00]	.169 [4.30]	.157 [4.00]	1.776 [45.10]	2.366 [60.10]
36	1.937 [49.20]	2.500 [63.50]	.169 [4.30]	.157 [4.00]	1.776 [45.10]	2.610 [66.30]
40	2.185 [55.50]	2.752 [69.90]	.205 [5.20]	.157 [4.00]	1.776 [45.10]	2.850 [72.40]

Dimensions are in Inches [mm]

064PPFR*

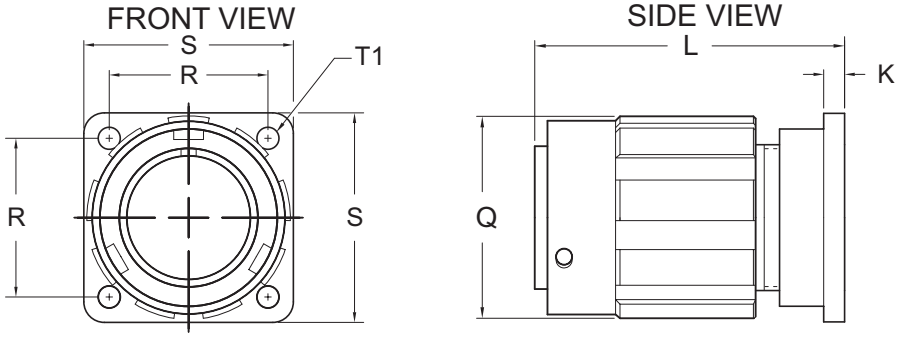

FINISH:
BLACK ANODIZE
CONTACTS:
F80 SILVER PLATED
CRIMP CONTACTS

SCPB064PPFR* Environmental when used with sealing gasket.
EXAMPLE PART NUMBER: SCPB064PPFR*

SHELL SIZE	FRONT VIEW			SIDE VIEW		
	R ±.004 [±0.1]	S ±.031 [±0.8]	T1 +.008 [+0.2] -.004 [-0.1]	K +.020 [+0.5] -.008 [-0.2]	L MAX.	Q MAX.
10SL	.717 [18.20]	1.000 [25.40]	.126 [3.20]	.110 [2.80]	1.177 [29.90]	.996 [25.30]
14S	.906 [23.00]	1.181 [30.00]	.126 [3.20]	.126 [3.20]	1.177 [29.90]	1.248 [31.70]
16S	.969 [24.60]	1.280 [32.50]	.126 [3.20]	.126 [3.20]	1.382 [35.10]	1.413 [35.90]
16	.969 [24.60]	1.280 [32.50]	.126 [3.20]	.126 [3.20]	1.382 [35.10]	1.413 [35.90]
18	1.063 [27.00]	1.378 [35.00]	.126 [3.20]	.126 [3.20]	1.583 [40.20]	1.555 [39.50]
20	1.157 [29.40]	1.496 [38.00]	.126 [3.20]	.126 [3.20]	1.724 [43.80]	1.689 [42.90]
22	1.252 [31.80]	1.614 [41.00]	.126 [3.20]	.150 [3.80]	1.724 [43.80]	1.815 [46.10]
24	1.374 [34.90]	1.752 [44.50]	.146 [3.70]	.150 [3.80]	1.724 [43.80]	1.949 [49.50]
28	1.563 [39.70]	2.000 [50.80]	.146 [3.70]	.157 [4.00]	1.732 [44.00]	2.240 [56.90]
32	1.752 [44.50]	2.244 [57.00]	.169 [4.30]	.157 [4.00]	1.776 [45.10]	2.508 [63.70]
36	1.937 [49.20]	2.500 [63.50]	.169 [4.30]	.157 [4.00]	1.776 [45.10]	2.760 [70.10]
40	2.185 [55.50]	2.752 [69.90]	.205 [5.20]	.157 [4.00]	1.776 [45.10]	2.980 [75.70]

Dimensions are in Inches [mm]

SPACECRAFT COMPONENTS CORP.
3040 Clayton Street
North Las Vegas, NV 89032
Phone: 702.851.7600
Fax: 702.851.7620
Email: salesinfo@spacecraft.com
Web: www.spacecraft.com

065FR**(C)

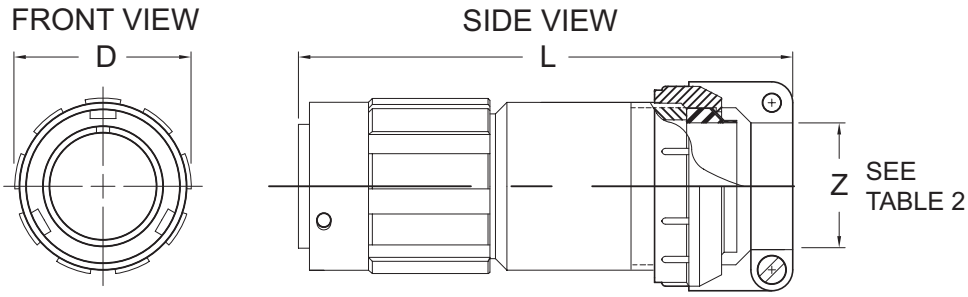

FINISH:
BLACK ANODIZE
CONTACTS:
F80 SILVER PLATED
CRIMP CONTACTS

EXAMPLE PART NUMBER: SCPB065FR24-28P-08C

SHELL SIZE	FRONT VIEW D DIA. MAX.	SIDE VIEW L
10SL	.996 [25.30]	Dimension L is dependent on the back-shell used, the cable range and the fitting used. **Consult factory.**
14S	1.248 [31.70]	
16S	1.413 [35.90]	
16	1.413 [35.90]	
18	1.555 [39.50]	
20	1.689 [42.90]	
22	1.815 [46.10]	
24	1.949 [49.50]	
28	2.240 [56.90]	
32	2.508 [63.70]	
36	2.760 [70.10]	
40	2.980 [75.70]	

Dimensions are in Inches [mm]

(XX) CLAMP CODE	Z CABLE RANGE OPEN	Z CABLE RANGE CLOSED
04C	.312 [7.92]	.094 [2.40]
06C	.438 [11.12]	.230 [5.84]
08C	.531 [13.48]	.315 [8.00]
10C	.625 [15.87]	.378 [9.60]
12C	.748 [19.00]	.445 [11.30]
16C	.937 [23.80]	.610 [15.50]
20C	1.250 [31.75]	.921 [23.40]
24C	1.378 [35.00]	.921 [23.40]
28C	1.624 [41.25]	1.177 [29.90]
32C	1.874 [47.60]	1.374 [34.90]

065FR**(PG)

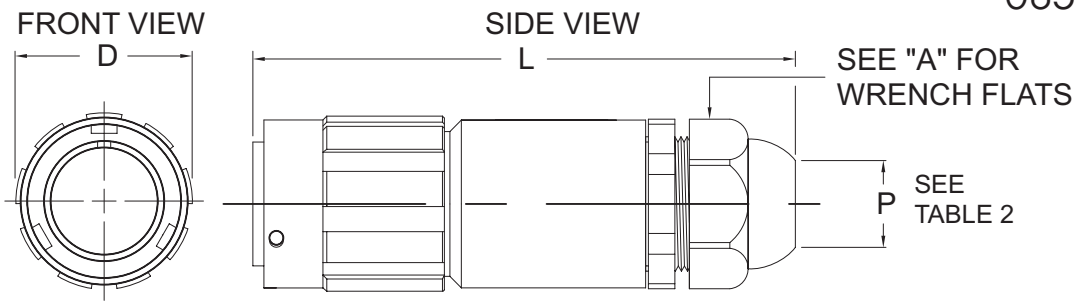

EXAMPLE PART NUMBER: SCPB065FR24-28P-11R

SHELL SIZE	FRONT VIEW D DIA. MAX.	SIDE VIEW L
10SL	.996 [25.30]	Dimension L is dependent on the back-shell used, the cable range and the fitting used. **Consult factory.**
14S	1.248 [31.70]	
16S	1.413 [35.90]	
16	1.413 [35.90]	
18	1.555 [39.50]	
20	1.689 [42.90]	
22	1.815 [46.10]	
24	1.949 [49.50]	
28	2.240 [56.90]	
32	2.508 [63.70]	
36	2.760 [70.10]	
40	2.980 [75.70]	

Dimensions are in Inches [mm]

(XX) CABLE RANGE CODE NO STRAIN RELIEF	TYPE	P CABLE RANGE	A WRENCH FLATS
07R	PG7	0.08-0.20 [2.0-5.0]	.591 [15.0]
07	PG7	0.12-0.26 [3.0-6.5]	.591 [15.0]
09R	PG9	0.08-0.24 [2.0-6.0]	.748 [19.0]
09	PG9	0.16-0.31 [4.0-8.0]	.748 [19.0]
11R	PG11	0.12-0.28 [3.0-7.0]	.866 [22.0]
11	PG11	0.20-0.39 [5.0-10.0]	.866 [22.0]
13R	PG13.5	0.20-0.35 [5.0-9.0]	.945 [24.0]
13	PG13.5	0.24-0.47 [6.0-12.0]	.945 [24.0]
16R	PG16	0.28-0.47 [7.0-12.0]	1.063 [27.0]
16	PG16	0.39-0.55 [10.0-14.0]	1.063 [27.0]
21R	PG21	0.35-0.63 [9.0-16.0]	1.299 [33.0]
21	PG21	0.51-0.71 [13.0-18.0]	1.299 [33.0]
29R	PG29	0.47-0.79 [12.0-20.0]	1.654 [42.0]
29	PG29	0.71-0.98 [18.0-25.0]	1.654 [42.0]
36R	PG36	0.79-1.02 [20.0-26.0]	2.087 [53.0]
36	PG36	0.87-1.26 [22.0-32.0]	2.087 [53.0]
42	PG42	1.18-1.50 [30.0-38.0]	2.362 [60.0]
48	PG48	1.34-1.73 [34.0-44.0]	2.559 [65.0]

STRAIGHT PLUG

065FR**(SPB)

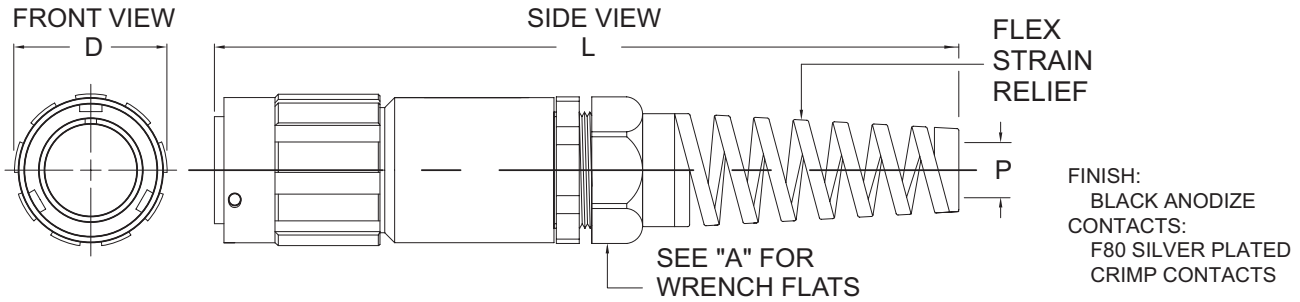

FINISH:
BLACK ANODIZE
CONTACTS:
F80 SILVER PLATED
CRIMP CONTACTS

EXAMPLE PART NUMBER: SCPB065FR24-28P-SPB16R

SHELL SIZE	FRONT VIEW D DIA. MAX.	SIDE VIEW L
10SL	.996 [25.30]	Dimension L is dependent on the back-shell used, the cable range and the fitting used. **Consult factory.**
14S	1.248 [31.70]	
16S	1.413 [35.90]	
16	1.413 [35.90]	
18	1.555 [39.50]	
20	1.689 [42.90]	
22	1.815 [46.10]	
24	1.949 [49.50]	
28	2.240 [56.90]	
32	2.508 [63.70]	
36	2.760 [70.10]	
40	2.980 [75.70]	

Dimensions are in Inches [mm]

(XX) CABLE RANGE CODE FLEX STRAIN RELIEF	TYPE	P CABLE RANGE	A WRENCH FLATS
SCB07R	PG7	0.08-0.20 [2.0-5.0]	.591 [15.0]
SCB07	PG7	0.12-0.26 [3.0-6.5]	.591 [15.0]
SCB09R	PG9	0.08-0.24 [2.0-6.0]	.748 [19.0]
SCB09	PG9	0.16-0.31 [4.0-8.0]	.748 [19.0]
SCB11R	PG11	0.12-0.28 [3.0-7.0]	.866 [22.0]
SCB11	PG11	0.20-0.39 [5.0-10.0]	.866 [22.0]
SCB13R	PG13.5	0.20-0.35 [5.0-9.0]	.945 [24.0]
SCB13	PG13.5	0.24-0.47 [6.0-12.0]	.945 [24.0]
SCB16R	PG16	0.28-0.47 [7.0-12.0]	1.063 [27.0]
SCB16	PG16	0.39-0.55 [10.0-14.0]	1.063 [27.0]
SCB21R	PG21	0.35-0.63 [9.0-16.0]	1.299 [33.0]
SCB21	PG21	0.51-0.71 [13.0-18.0]	1.299 [33.0]
SCB29R	PG29	0.47-0.79 [12.0-20.0]	1.654 [42.0]
SCB29	PG29	0.71-0.98 [18.0-25.0]	1.654 [42.0]
SCB36R	PG36	0.79-1.02 [20.0-26.0]	2.087 [53.0]
SCB36	PG36	0.87-1.26 [22.0-32.0]	2.087 [53.0]
SCB42	PG42	1.18-1.50 [30.0-38.0]	2.362 [60.0]
SCB48	PG48	1.34-1.73 [34.0-44.0]	2.559 [65.0]

065LCG*/065LC*

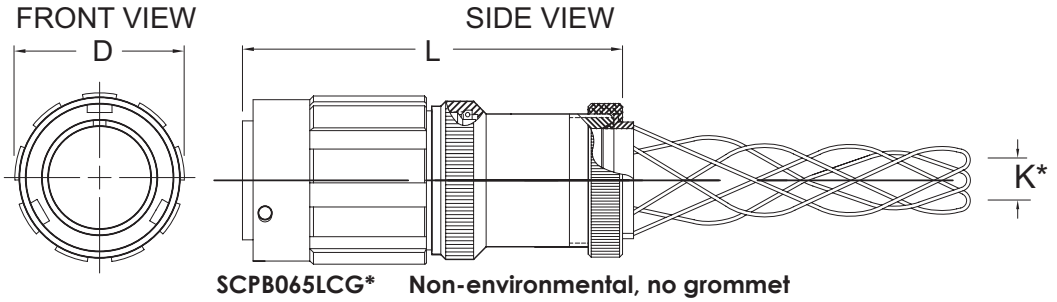

SCPB065LCG* **Non-environmental, no grommet**
SCPB065LC* **Environmental with grommet**

SHELL SIZE	FRONT VIEW D DIA. MAX.	SIDE VIEW L MAX
10SL	.996 [25.30]	3.937 [100.0]
14S	1.248 [31.70]	3.937 [100.0]
16S	1.413 [35.90]	3.937 [100.0]
16	1.413 [35.90]	4.331 [110.0]
18	1.555 [39.50]	4.331 [110.0]
20	1.689 [42.90]	4.567 [116.0]
22	1.815 [46.10]	4.567 [116.0]
24	1.949 [49.50]	4.724 [120.0]
28	2.240 [56.90]	5.079 [129.0]
32	2.508 [63.70]	5.709 [145.0]
36	2.760 [70.10]	5.709 [145.0]
40	2.980 [75.70]	5.709 [145.0]

CABLE RANGE		
K*	MIN	MAX
K0	.250 [6.35]	.375 [9.53]
K1	.375 [9.53]	.500 [12.70]
K2	.500 [12.70]	.625 [15.87]
K3	.625 [15.87]	.750 [19.05]
K4	.750 [19.05]	.875 [22.23]
K5	.875 [22.23]	1.000 [25.40]
K6	1.000 [25.40]	1.120 [28.45]
K7	1.120 [28.45]	1.250 [31.75]
K8	1.290 [32.77]	1.500 [38.10]
K9	1.560 [39.62]	1.625 [41.28]
K10	1.625 [41.28]	1.750 [44.45]

Dimensions are in Inches [mm]
* Dimension "L" will vary from the values indicated with escalating or de-escalating backshells and some special insert configurations.

SPACECRAFT COMPONENTS CORP.
3040 Clayton Street
North Las Vegas, NV 89032
Phone: 702.851.7600
Fax: 702.851.7620
Email: salesinfo@spacecraft.com
Web: www.spacecraft.com

STRAIGHT PLUG

065LCF*/065LCFZ*

FRONT VIEW

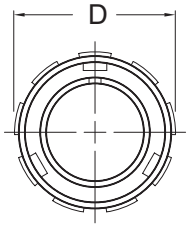

SIDE VIEW

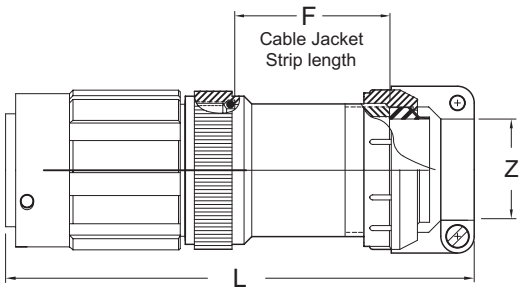

SCPB065LCF* **Non-environmental, no grommet**
SCPB065LCFZ* **Environmental with grommet**

SHELL SIZE	FRONT VIEW	SIDE VIEW			
	D DIA. MAX.	F REF	L MAX	Z OPEN	Z CLOSED
10SL	.996 [25.30]	1.654 [42.00]	3.976 [101.00]	.312 [7.93]	.094 [2.38]
14S	1.248 [31.70]	1.677 [42.60]	3.976 [101.00]	.438 [11.12]	.230 [5.84]
16S	1.413 [35.90]	1.677 [42.60]	3.976 [101.00]	.531 [13.48]	.315 [8.00]
16	1.413 [35.90]	1.677 [42.60]	4.488 [114.00]	.531 [13.48]	.315 [8.00]
18	1.555 [39.50]	1.803 [45.80]	4.685 [119.00]	.625 [15.87]	.378 [9.60]
20	1.689 [42.90]	1.807 [45.90]	4.685 [119.00]	.748 [19.00]	.445 [11.30]
22	1.815 [46.10]	1.807 [45.90]	4.685 [119.00]	.748 [19.00]	.445 [11.30]
24	1.949 [49.50]	1.752 [44.50]	4.882 [124.00]	.937 [23.80]	.610 [15.50]
28	2.240 [56.90]	1.949 [49.50]	5.118 [130.00]	.937 [23.80]	.610 [15.50]
32	2.508 [63.70]	1.953 [49.60]	5.394 [137.00]	1.250 [31.75]	.921 [23.40]
36	2.760 [70.10]	1.969 [50.00]	5.669 [144.00]	1.378 [35.00]	.921 [23.40]
40	2.980 [75.70]	1.969 [50.00]	5.669 [144.00]	1.624 [41.25]	1.177 [29.90]

Dimensions are in Inches [mm]

90° PLUG

08A*/08R*

FRONT VIEW

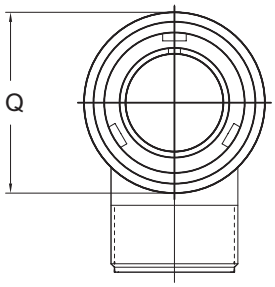

SIDE VIEW

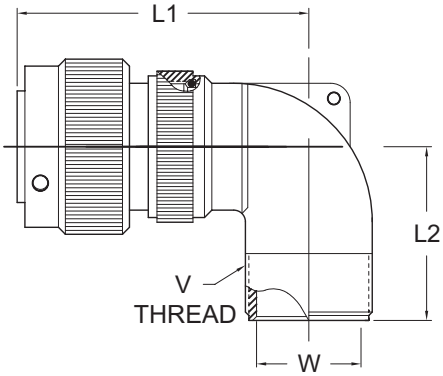

SCPB08A* **Non-environmental, no grommet**
SCPB08R* **Environmental with grommet**

SHELL SIZE	FRONT VIEW	SIDE VIEW			
	Q MAX	L1 MAX	L2 MAX	V THREAD CLASS 2A	W MIN
10SL	.898 [22.80]	1.772 [45.00]	1.181 [30.00]	5/8-24 UNEF	.335 [8.50]
14S	1.150 [29.20]	1.850 [47.00]	1.181 [30.00]	3/4-20 UNEF	.472 [12.00]
16S	1.260 [32.00]	1.890 [48.00]	1.181 [30.00]	7/8-20 UNEF	.571 [14.50]
16	1.260 [32.00]	2.244 [57.00]	1.181 [30.00]	7/8-20 UNEF	.571 [14.50]
18	1.437 [36.50]	2.283 [58.00]	1.378 [35.00]	1-20 UNEF	.689 [17.50]
20	1.571 [39.90]	2.402 [61.00]	1.378 [35.00]	1 3/16-18 UNEF	.768 [19.50]
22	1.697 [43.10]	2.402 [61.00]	1.378 [35.00]	1 3/16-18 UNEF	.866 [22.00]
24	1.835 [46.60]	2.598 [66.00]	1.575 [40.00]	1 7/16-18 UNEF	.984 [25.00]
28	2.102 [53.40]	2.598 [66.00]	1.575 [40.00]	1 7/16-18 UNEF	1.142 [29.00]
32	2.366 [60.10]	2.835 [72.00]	1.772 [45.00]	1 3/4-18 UNS	1.339 [34.00]
36	2.610 [66.30]	2.953 [75.00]	1.969 [50.00]	2-18 UNS	1.516 [38.50]
40	2.850 [72.40]	3.071 [78.00]	2.165 [55.00]	2 1/4-16 UN	1.890 [48.00]

Dimensions are in Inches [mm]

90° PLUG

08AGG*/08RGG*

FRONT VIEW

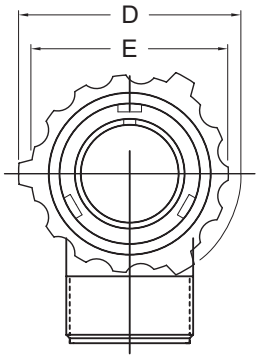

SIDE VIEW

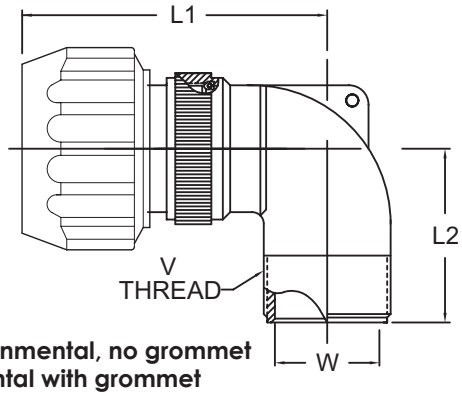

SCPB08AGG* **Non-environmental, no grommet**
SCPB08RGG* **Environmental with grommet**

SHELL SIZE	FRONT VIEW			SIDE VIEW		
	D DIA.	E DIA.	L1 MAX	L2 MAX	V THREAD CLASS 2A	W MIN
10SL	1.319 [33.50]	1.122 [28.50]	1.913 [48.60]	1.181 [30.00]	5/8-24 UNEF	.335 [8.50]
14S	1.583 [40.20]	1.280 [32.50]	1.988 [50.50]	1.181 [30.00]	3/4-20 UNEF	.472 [12.00]
16S	* [*]	* [*]	2.031 [51.60]	1.181 [30.00]	7/8-20 UNEF	.571 [14.50]
16	* [*]	* [*]	2.386 [60.60]	1.181 [30.00]	7/8-20 UNEF	.571 [14.50]
18	1.929 [49.00]	1.713 [43.50]	2.421 [61.50]	1.378 [35.00]	1-20 UNEF	.689 [17.50]
20	2.028 [51.50]	1.811 [46.00]	2.543 [64.60]	1.378 [35.00]	1 3/16-18 UNEF	.768 [19.50]
22	2.224 [56.50]	1.988 [50.50]	2.543 [64.60]	1.378 [35.00]	1 3/16-18 UNEF	.866 [22.00]
24	2.362 [60.00]	2.126 [54.00]	2.736 [69.50]	1.575 [40.00]	1 7/16-18 UNEF	.984 [25.00]
28	2.638 [67.00]	2.402 [61.00]	2.736 [69.50]	1.575 [40.00]	1 7/16-18 UNEF	1.142 [29.00]
32	2.992 [76.00]	2.661 [67.60]	2.976 [75.60]	1.772 [45.00]	1 3/4-18 UNS	1.339 [34.00]
36	3.240 [82.30]	2.925 [74.30]	3.094 [78.60]	1.969 [50.00]	2-18 UNS	1.516 [38.50]
40	3.465 [88.00]	3.150 [80.00]	3.213 [81.60]	2.165 [55.00]	2 1/4-16 UN	1.890 [48.00]

Dimensions are in Inches [mm]
* Consult factory for dimensions.

08AF*/08F*

FRONT VIEW

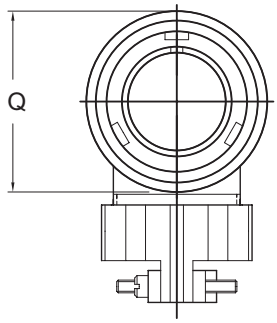

SIDE VIEW

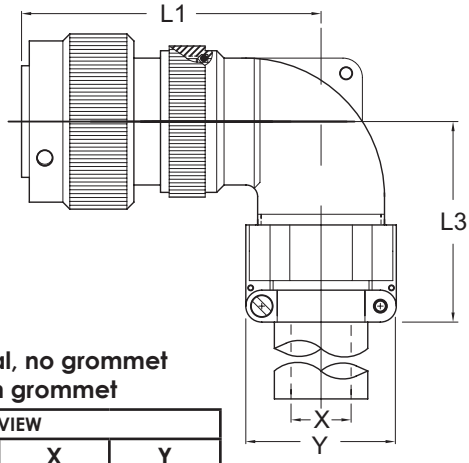

SCPB08AF* **Non-environmental, no grommet**
SCPB08F* **Environmental with grommet**

SHELL SIZE	FRONT VIEW	SIDE VIEW			
	Q MAX	L1 MAX	L3 MAX	X MIN	Y MAX
10SL	.898 [22.80]	1.772 [45.00]	1.654 [42.00]	.256 [6.50]	.894 [22.70]
14S	1.150 [29.20]	1.850 [47.00]	1.654 [42.00]	.354 [9.00]	1.083 [27.50]
16S	1.260 [32.00]	1.890 [48.00]	1.772 [45.00]	.433 [11.00]	1.181 [30.00]
16	1.260 [32.00]	2.244 [57.00]	1.772 [45.00]	.433 [11.00]	1.181 [30.00]
18	1.437 [36.50]	2.283 [58.00]	2.087 [53.00]	.559 [14.20]	1.268 [32.20]
20	1.571 [39.90]	2.402 [61.00]	2.087 [53.00]	.622 [15.80]	1.476 [37.50]
22	1.697 [43.10]	2.402 [61.00]	2.087 [53.00]	.622 [15.80]	1.476 [37.50]
24	1.835 [46.60]	2.598 [66.00]	2.283 [58.00]	.843 [21.40]	1.705 [43.30]
28	2.102 [53.40]	2.598 [66.00]	2.283 [58.00]	.843 [21.40]	1.705 [43.30]
32	2.366 [60.10]	2.835 [72.00]	2.598 [66.00]	1.051 [26.70]	2.035 [51.70]
36	2.610 [66.30]	2.953 [75.00]	2.717 [69.00]	1.248 [31.70]	2.283 [58.00]
40	2.850 [72.40]	3.071 [78.00]	3.740 [95.00]	1.374 [34.90]	2.579 [65.50]

Dimensions are in Inches [mm]

SPACECRAFT COMPONENTS CORP.
3040 Clayton Street
North Las Vegas, NV 89032
Phone: 702.851.7600
Fax: 702.851.7620
Email: salesinfo@spacecraft.com
Web: www.spacecraft.com

90° PLUG

08AFGG*/08FGG*

FRONT VIEW

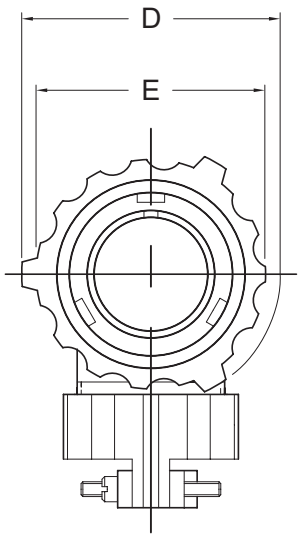

SIDE VIEW

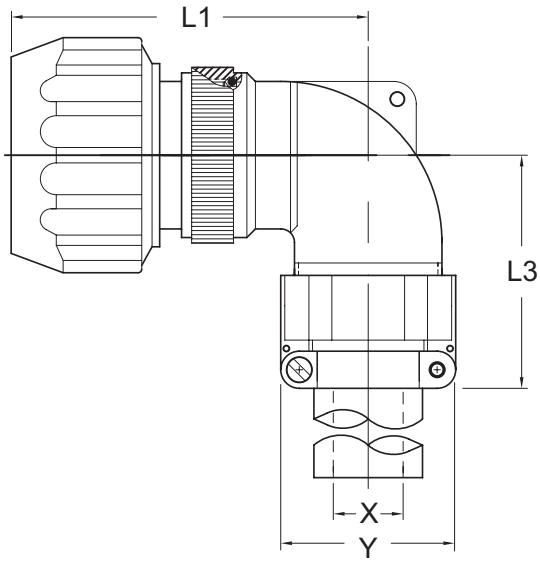

SCPB08AFGG* **Non-environmental, no grommet**
SCPB08FGG* **Environmental with grommet**

SHELL SIZE	FRONT VIEW		SIDE VIEW			
	D DIA.	E DIA.	L1 MAX	L3 MAX	X MIN	Y MAX
10SL	1.319 [33.50]	1.122 [28.50]	1.913 [48.60]	1.654 [42.00]	.256 [6.50]	.894 [22.70]
14S	1.583 [40.20]	1.280 [32.50]	1.988 [50.50]	1.654 [42.00]	.354 [9.00]	1.083 [27.50]
16S	* [*]	* [*]	2.031 [51.60]	1.772 [45.00]	.433 [11.00]	1.181 [30.00]
16	* [*]	* [*]	2.386 [60.60]	1.772 [45.00]	.433 [11.00]	1.181 [30.00]
18	1.929 [49.00]	1.713 [43.50]	2.421 [61.50]	2.087 [53.00]	.559 [14.20]	1.268 [32.20]
20	2.028 [51.50]	1.811 [46.00]	2.543 [64.60]	2.087 [53.00]	.622 [15.80]	1.476 [37.50]
22	2.224 [56.50]	1.988 [50.50]	2.543 [64.60]	2.087 [53.00]	.622 [15.80]	1.476 [37.50]
24	2.362 [60.00]	2.126 [54.00]	2.736 [69.50]	2.283 [58.00]	.843 [21.40]	1.705 [43.30]
28	2.638 [67.00]	2.402 [61.00]	2.736 [69.50]	2.283 [58.00]	.843 [21.40]	1.705 [43.30]
32	2.992 [76.00]	2.661 [67.60]	2.976 [75.60]	2.598 [66.00]	1.051 [26.70]	2.035 [51.70]
36	3.240 [82.30]	2.925 [74.30]	3.094 [78.60]	2.717 [69.00]	1.248 [31.70]	2.283 [58.00]
40	3.465 [88.00]	3.150 [80.00]	3.213 [81.60]	3.740 [95.00]	1.374 [34.90]	2.579 [65.50]

Dimensions are in Inches [mm]
* Consult factory for dimensions.

90° PLUG

08ARK*/08RK*

FRONT VIEW

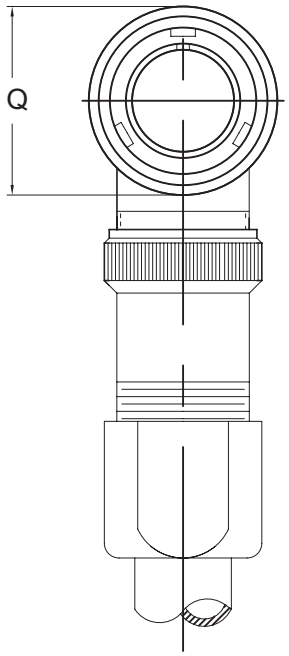

SIDE VIEW

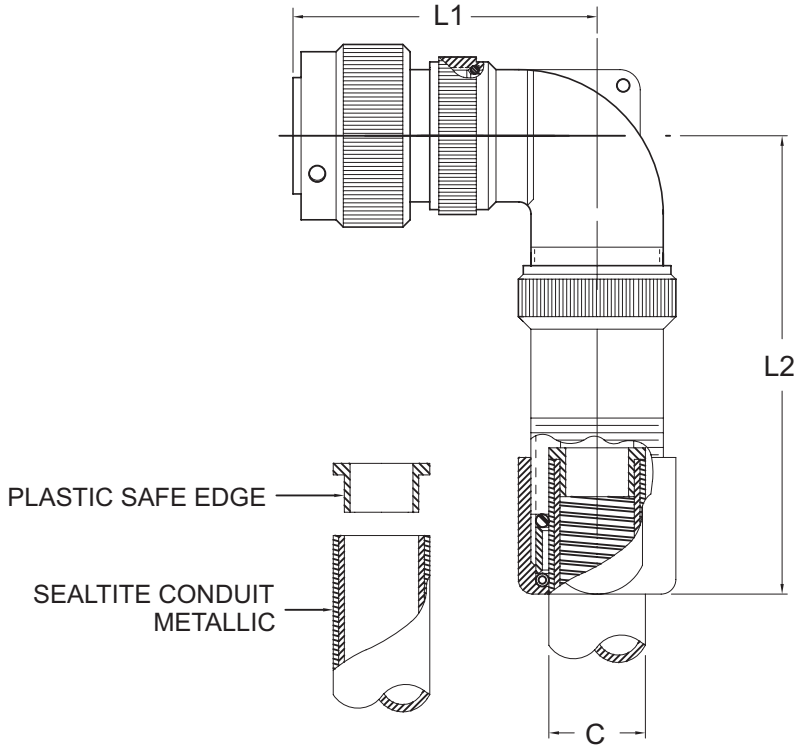

SCPB08ARK* **Environmental, no grommet**
SCPB08RK* **Environmental with grommet**

SHELL SIZE	FRONT VIEW	SIDE VIEW	
	Q MAX	L1 MAX	L2
10SL	.898 [22.80]	1.772 [45.00]	Dimension L2 is dependent on the back-shell used, the cable range and the fitting used. **Consult factory.**
14S	1.150 [29.20]	1.850 [47.00]	
16S	1.260 [32.00]	1.890 [48.00]	
16	1.260 [32.00]	2.244 [57.00]	
18	1.437 [36.50]	2.283 [58.00]	
20	1.571 [39.90]	2.402 [61.00]	
22	1.697 [43.10]	2.402 [61.00]	
24	1.835 [46.60]	2.598 [66.00]	
28	2.102 [53.40]	2.598 [66.00]	
32	2.366 [60.10]	2.835 [72.00]	
36	2.610 [66.30]	2.953 [75.00]	
40	2.850 [72.40]	3.071 [78.00]	

Dimensions are in Inches [mm]

CODE (***)	AVAILABLE CONDUIT SIZES C
(038)	3/8 [9.52]
(050)	1/2 [12.70]
(075)	3/4 [19.05]
(100)	1 [25.40]
(125)	1 1/4 [31.75]
(150)	1 1/2 [38.10]
(200)	2 [50.80]

(***) Conduit Size must be specified as part of the connector part number using Conduit Code

SPACECRAFT COMPONENTS CORP.
3040 Clayton Street
North Las Vegas, NV 89032
Phone: 702.851.7600
Fax: 702.851.7620
Email: salesinfo@spacecraft.com
Web: www.spacecraft.com

90° PLUG

08ARKGG*/08RKGG*

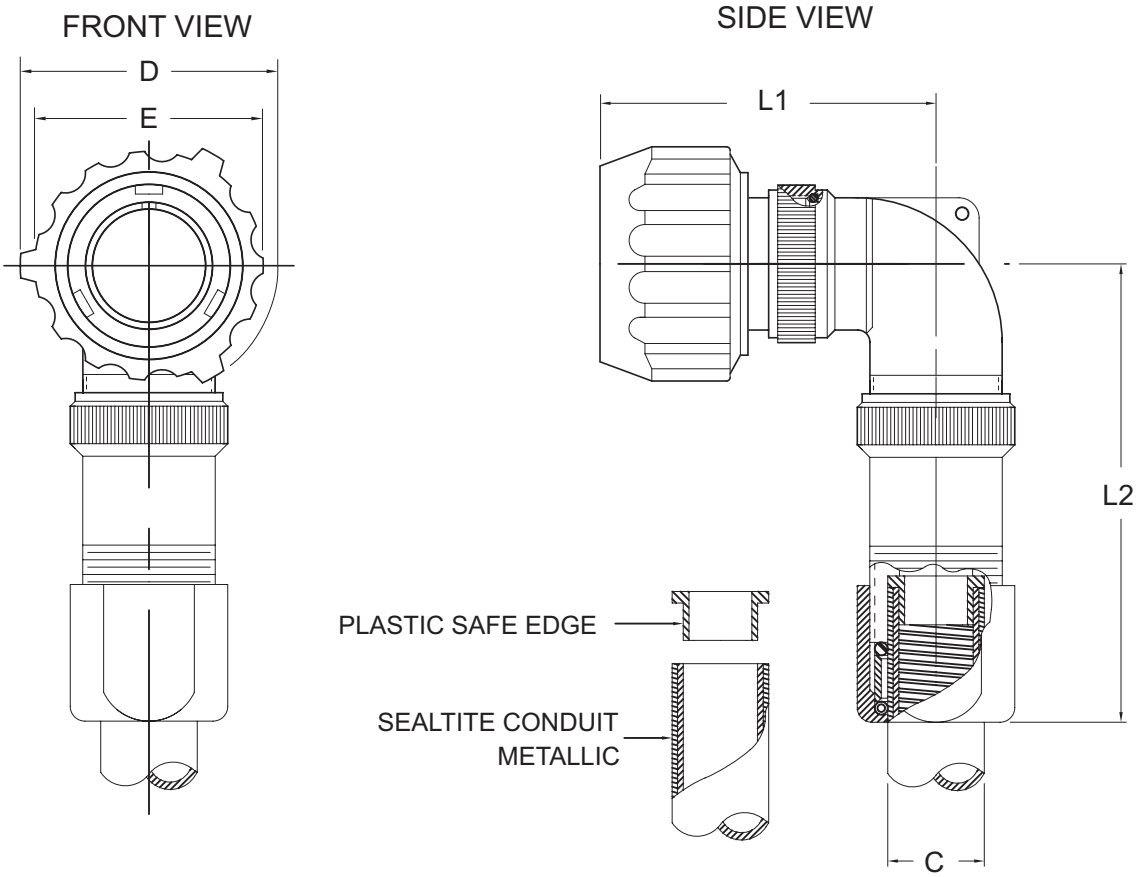

SCPB08ARKGG* Environmental, no grommet
SCPB08RKGG* Environmental with grommet

SHELL SIZE	FRONT VIEW		SIDE VIEW	
	D DIA.	E DIA.	L1 MAX	L2
10SL	1.319 [33.50]	1.122 [28.50]	1.913 [48.60]	Dimension L2 is dependent on the back-shell used, the cable range and the fitting used. **Consult factory.**
14S	1.583 [40.20]	1.280 [32.50]	1.988 [50.50]	
16S	* [*]	* [*]	2.031 [51.60]	
16	* [*]	* [*]	2.386 [60.60]	
18	1.929 [49.00]	1.713 [43.50]	2.421 [61.50]	
20	2.028 [51.50]	1.811 [46.00]	2.543 [64.60]	
22	2.224 [56.50]	1.988 [50.50]	2.543 [64.60]	
24	2.362 [60.00]	2.126 [54.00]	2.736 [69.50]	
28	2.638 [67.00]	2.402 [61.00]	2.736 [69.50]	
32	2.992 [76.00]	2.661 [67.60]	2.976 [75.60]	
36	3.240 [82.30]	2.925 [74.30]	3.094 [78.60]	
40	3.465 [88.00]	3.150 [80.00]	3.213 [81.60]	

Dimensions are in Inches [mm]
* Consult factory for dimensions.

CODE (***)	AVAILABLE CONDUIT SIZES C
(038)	3/8 [9.52]
(050)	1/2 [12.70]
(075)	3/4 [19.05]
(100)	1 [25.40]
(125)	1 1/4 [31.75]
(150)	1 1/2 [38.10]
(200)	2 [50.80]

(***) Conduit Size must be specified as part of the connector part number using Conduit Code

90° PLUG

08SB*

FRONT VIEW

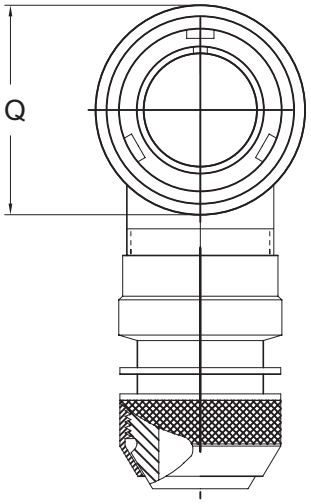

SIDE VIEW

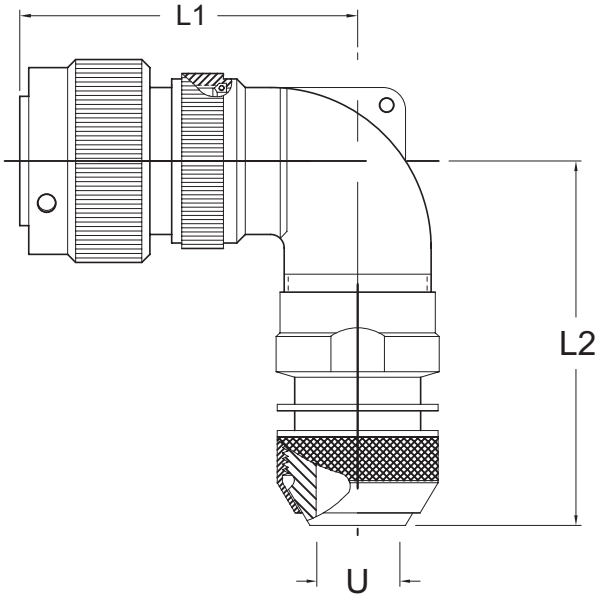

SCPB08SB* Environmental with grommet

SHELL SIZE	FRONT VIEW	SIDE VIEW		
	Q MAX	L1 MAX	L2	U MIN
10SL	.898 [22.80]	1.772 [45.00]	Dimension L2 is dependent on the back-shell used, the cable range and the fitting used. **Consult factory.**	.339 [8.60]
14S	1.150 [29.20]	1.850 [47.00]		.417 [10.60]
16S	1.260 [32.00]	1.890 [48.00]		.531 [13.50]
16	1.260 [32.00]	2.244 [57.00]		.531 [13.50]
18	1.437 [36.50]	2.283 [58.00]		.575 [14.60]
20	1.571 [39.90]	2.402 [61.00]		.728 [18.50]
22	1.697 [43.10]	2.402 [61.00]		.819 [20.80]
24	1.835 [46.60]	2.598 [66.00]		.969 [24.60]
28	2.102 [53.40]	2.598 [66.00]		1.063 [27.00]
32	2.366 [60.10]	2.835 [72.00]		1.311 [33.30]
36	2.610 [66.30]	2.953 [75.00]		1.516 [38.50]
40	2.850 [72.40]	3.071 [78.00]		1.811 [46.00]

Dimensions are in Inches [mm]

SPACECRAFT COMPONENTS CORP.
3040 Clayton Street
North Las Vegas, NV 89032
Phone: 702.851.7600
Fax: 702.851.7620
Email: salesinfo@spacecraft.com
Web: www.spacecraft.com

FRONT VIEW

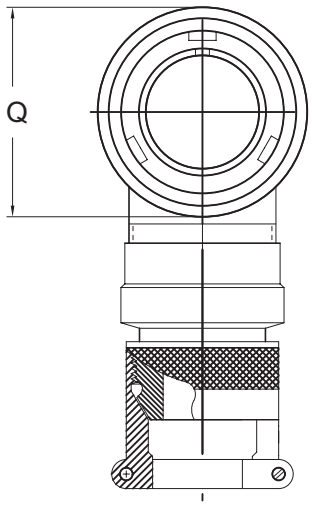

SIDE VIEW

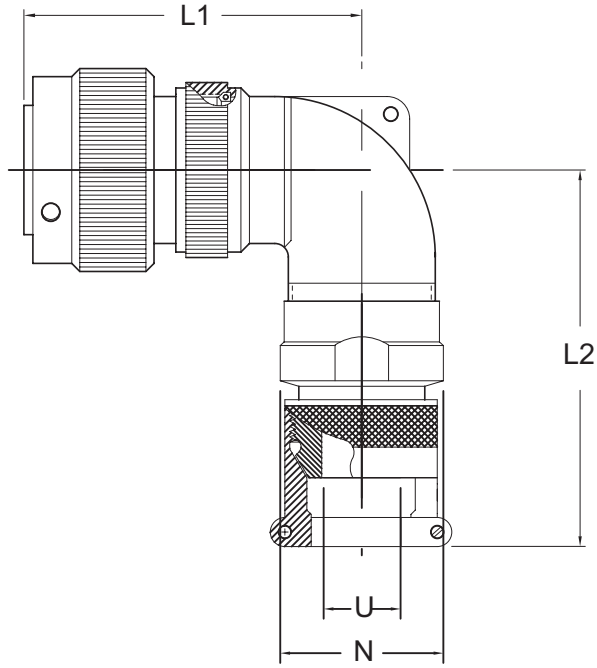

SCPB08ASBF* Environmental, no grommet
SCPB08SBF* Environmental with grommet

SHELL SIZE	FRONT VIEW	SIDE VIEW			
	Q MAX	N MAX	L1 MAX	L2	U MIN
10SL	.898 [22.80]	.866 [22.00]	1.772 [45.00]	Dimension L2 is dependent on the back-shell used, the cable range and the fitting used. **Consult factory.**	.339 [8.60]
14S	1.150 [29.20]	.984 [25.00]	1.850 [47.00]		.417 [10.60]
16S	1.260 [32.00]	1.102 [28.00]	1.890 [48.00]		.531 [13.50]
16	1.260 [32.00]	1.102 [28.00]	2.244 [57.00]		.531 [13.50]
18	1.437 [36.50]	1.220 [31.00]	2.283 [58.00]		.575 [14.60]
20	1.571 [39.90]	1.378 [35.00]	2.402 [61.00]		.728 [18.50]
22	1.697 [43.10]	1.496 [38.00]	2.402 [61.00]		.819 [20.80]
24	1.835 [46.60]	1.614 [41.00]	2.598 [66.00]		.969 [24.60]
28	2.102 [53.40]	1.890 [48.00]	2.598 [66.00]		1.063 [27.00]
32	2.366 [60.10]	2.126 [54.00]	2.835 [72.00]		1.311 [33.30]
36	2.610 [66.30]	2.402 [61.00]	2.953 [75.00]		1.516 [38.50]
40	2.850 [72.40]	2.677 [68.00]	3.071 [78.00]		1.811 [46.00]

Dimensions are in Inches [mm]

90° PLUG

08ASBT*/08SBT*

FRONT VIEW

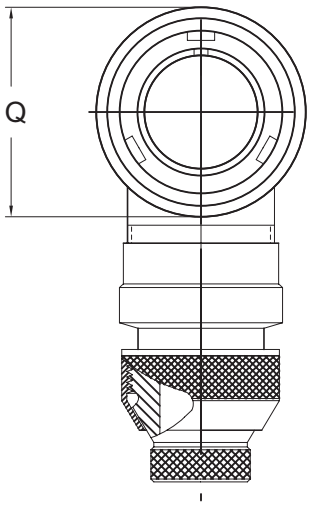

SIDE VIEW

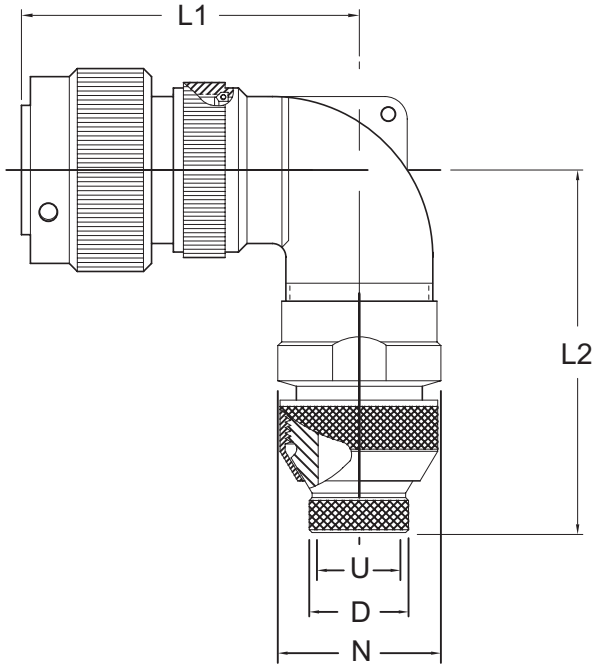

SCPB08ASBT* Environmental, no grommet
SCPB08SBT* Environmental with grommet

SHELL SIZE	FRONT VIEW	SIDE VIEW				
	Q MAX	D MAX	N MAX	L1 MAX	L2	U MIN
10SL	.898 [22.80]	.437 [11.10]	.866 [22.00]	1.772 [45.00]	Dimension L2 is dependent on the back-shell used, the cable range and the fitting used. **Consult factory.**	.299 [7.60]
14S	1.150 [29.20]	.563 [14.30]	.984 [25.00]	1.850 [47.00]		.425 [10.80]
16S	1.260 [32.00]	.626 [15.90]	1.102 [28.00]	1.890 [48.00]		.488 [12.40]
16	1.260 [32.00]	.626 [15.90]	1.102 [28.00]	2.244 [57.00]		.488 [12.40]
18	1.437 [36.50]	.752 [19.10]	1.220 [31.00]	2.283 [58.00]		.614 [15.60]
20	1.571 [39.90]	.878 [22.30]	1.378 [35.00]	2.402 [61.00]		.736 [18.70]
22	1.697 [43.10]	1.000 [25.40]	1.496 [38.00]	2.402 [61.00]		.862 [21.90]
24	1.835 [46.60]	1.126 [28.60]	1.614 [41.00]	2.598 [66.00]		.988 [25.10]
28	2.102 [53.40]	1.252 [31.80]	1.890 [48.00]	2.598 [66.00]		1.114 [28.30]
32	2.366 [60.10]	1.441 [36.60]	2.126 [54.00]	2.835 [72.00]		1.114 [28.30]
36	2.610 [66.30]	1.752 [44.50]	2.402 [61.00]	2.953 [75.00]		1.614 [41.00]
40	2.850 [72.40]	2.000 [50.80]	2.677 [68.00]	3.071 [78.00]		1.598 [40.60]

Dimensions are in Inches [mm]

SPACECRAFT COMPONENTS CORP.
3040 Clayton Street
North Las Vegas, NV 89032
Phone: 702.851.7600
Fax: 702.851.7620
Email: salesinfo@spacecraft.com
Web: www.spacecraft.com

FRONT VIEW SIDE VIEW

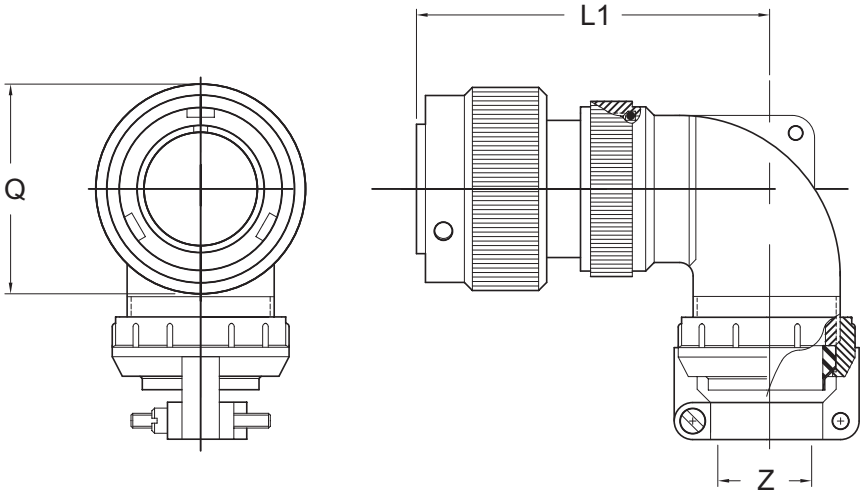

SCPB08CF* Environmental, no grommet
SCPB08CFZ* Environmental with grommet

SHELL SIZE	FRONT VIEW	SIDE VIEW		
	Q MAX	L1 MAX	Z	
			OPEN	CLOSED
10SL	.898 [22.80]	1.772 [45.00]	.312 [7.93]	.094 [2.38]
14S	1.150 [29.20]	1.850 [47.00]	.438 [11.12]	.230 [5.84]
16S	1.260 [32.00]	1.890 [48.00]	.531 [13.48]	.315 [8.00]
16	1.260 [32.00]	2.244 [57.00]	.531 [13.48]	.315 [8.00]
18	1.437 [36.50]	2.283 [58.00]	.625 [15.87]	.378 [9.60]
20	1.571 [39.90]	2.402 [61.00]	.748 [19.00]	.445 [11.30]
22	1.697 [43.10]	2.402 [61.00]	.748 [19.00]	.445 [11.30]
24	1.835 [46.60]	2.598 [66.00]	.937 [23.80]	.610 [15.50]
28	2.102 [53.40]	2.598 [66.00]	.937 [23.80]	.610 [15.50]
32	2.366 [60.10]	2.835 [72.00]	1.250 [31.75]	.921 [23.40]
36	2.610 [66.30]	2.953 [75.00]	1.378 [35.00]	.921 [23.40]
40	2.850 [72.40]	3.071 [78.00]	1.624 [41.25]	1.177 [29.90]

Dimensions are in Inches [mm]

90° PLUG

08CFGG*/08CFZGG*

FRONT VIEW

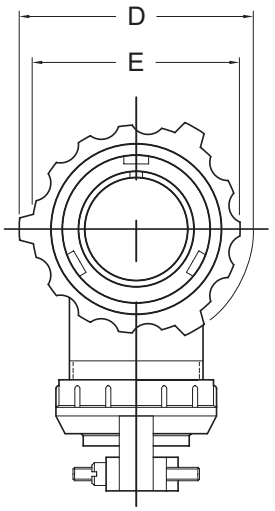

SIDE VIEW

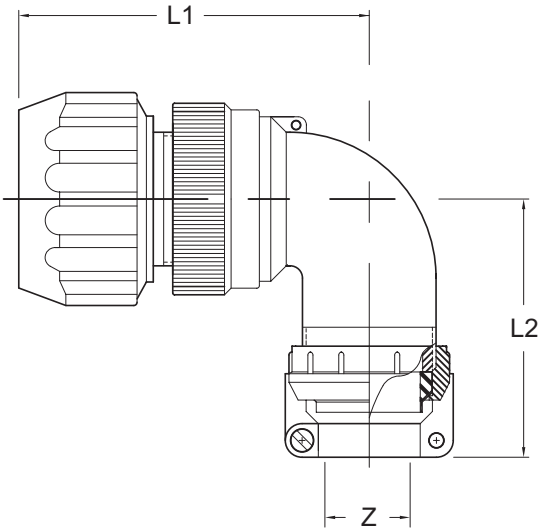

SCPB08CFGG* Environmental, no grommet
SCPB08CFZGG* Environmental with grommet

SHELL SIZE	FRONT VIEW		SIDE VIEW			
	D DIA.	E DIA.	L1 MAX.	L2 MAX.	Z OPEN	Z CLOSED
10SL	1.319 [33.50]	1.122 [28.50]	1.913 [48.60]	2.402 [61.0]	.312 [7.93]	.094 [2.38]
14S	1.583 [40.20]	1.280 [32.50]	1.988 [50.50]	2.402 [61.0]	.438 [11.12]	.230 [5.84]
16S	* [*]	* [*]	* [*]	* [*]	.531 [13.48]	.315 [8.00]
16	* [*]	* [*]	* [*]	* [*]	.531 [13.48]	.315 [8.00]
18	1.929 [49.00]	1.713 [43.50]	2.421 [61.50]	2.677 [68.0]	.625 [15.87]	.378 [9.60]
20	2.028 [51.50]	1.811 [46.00]	2.543 [64.60]	2.677 [68.0]	.748 [19.00]	.445 [11.30]
22	2.224 [56.50]	1.988 [50.50]	2.543 [64.60]	2.677 [68.0]	.748 [19.00]	.445 [11.30]
24	2.362 [60.00]	2.126 [54.00]	2.736 [69.50]	2.992 [76.0]	.937 [23.80]	.610 [15.50]
28	2.638 [67.00]	2.402 [61.00]	2.736 [69.50]	2.992 [76.0]	.937 [23.80]	.610 [15.50]
32	2.992 [76.00]	2.661 [67.60]	2.976 [75.60]	3.425 [87.0]	1.250 [31.75]	.921 [23.40]
36	3.240 [82.30]	2.925 [74.30]	3.094 [78.60]	3.858 [98.0]	1.378 [35.00]	.921 [23.40]
40	3.465 [88.00]	3.150 [80.00]	3.213 [81.60]	4.055 [103.0]	1.624 [41.25]	1.177 [29.90]

Dimensions are in Inches [mm]
* Consult factory for dimensions.

SPACECRAFT COMPONENTS CORP.
3040 Clayton Street
North Las Vegas, NV 89032
Phone: 702.851.7600
Fax: 702.851.7620
Email: salesinfo@spacecraft.com
Web: www.spacecraft.com

90° PLUG

08LC*/08LCG*

FRONT VIEW

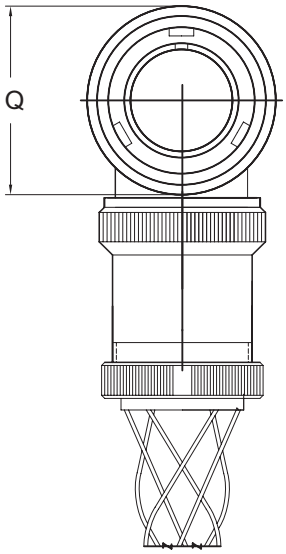

SIDE VIEW

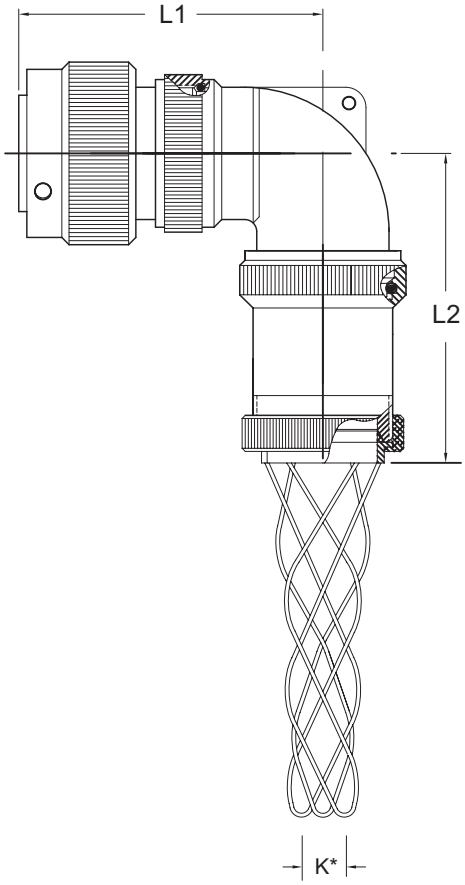

SCPB08LC* **Environmental with grommet**
SCPB08LCG* **Environmental less grommet**

SHELL SIZE	FRONT VIEW	SIDE VIEW	
	Q MAX	L1 MAX	L2 MAX
10SL	.898 [22.80]	1.772 [45.0]	3.937 [100.0]
14S	1.150 [29.20]	1.850 [47.0]	3.937 [100.0]
16S	1.260 [32.00]	1.890 [48.0]	3.937 [100.0]
16	1.260 [32.00]	2.244 [57.0]	4.331 [110.0]
18	1.437 [36.50]	2.283 [58.0]	4.331 [110.0]
20	1.571 [39.90]	2.402 [61.0]	4.567 [116.0]
22	1.697 [43.10]	2.402 [61.0]	4.567 [116.0]
24	1.835 [46.60]	2.598 [66.0]	4.724 [120.0]
28	2.102 [53.40]	2.598 [66.0]	5.079 [129.0]
32	2.366 [60.10]	2.835 [72.0]	5.709 [145.0]
36	2.610 [66.30]	2.953 [75.0]	5.709 [145.0]
40	2.850 [72.40]	3.071 [78.0]	5.709 [145.0]

K*	CABLE RANGE	
	MIN	MAX
K0	.250 [6.35]	.375 [9.53]
K1	.375 [9.53]	.500 [12.70]
K2	.500 [12.70]	.625 [15.87]
K3	.625 [15.87]	.750 [19.05]
K4	.750 [19.05]	.875 [22.23]
K5	.875 [22.23]	1.000 [25.40]
K6	1.000 [25.40]	1.120 [28.45]
K7	1.120 [28.45]	1.250 [31.75]
K8	1.290 [32.77]	1.500 [38.10]
K9	1.560 [39.62]	1.625 [41.28]
K10	1.625 [41.28]	1.750 [44.45]

Dimensions are in Inches [mm]
1. Dimension "L2" will vary from the values indicated with escalating or de-escalating backshells and some special insert configurations.

90° PLUG

08NM*/08NMG*

FRONT VIEW

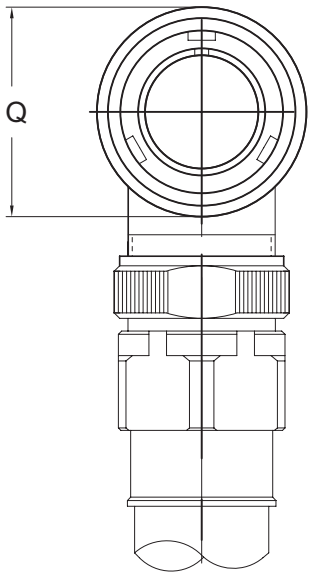

SIDE VIEW

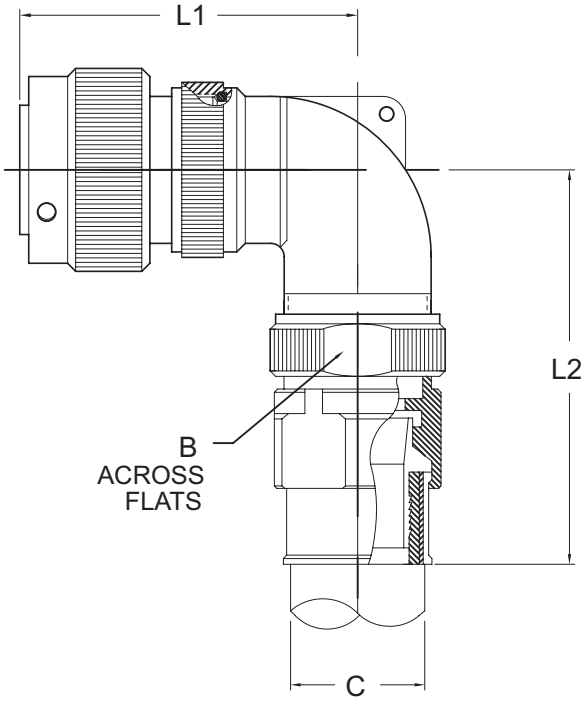

SCPB08NM* **Environmental with grommet**
SCPB08NMG* **Environmental, no grommet**

SHELL SIZE	FRONT VIEW	SIDE VIEW		
	Q MAX	B ACROSS FLATS	L1 MAX	L2
10SL	.898 [22.80]	.701 [17.80]	1.772 [45.00]	Dimension L2 is dependent on the back-shell used, the cable range and the fitting used. **Consult factory.**
14S	1.150 [29.20]	.937 [23.80]	1.850 [47.00]	
16S	1.260 [32.00]	1.000 [25.40]	1.890 [48.00]	
16	1.260 [32.00]	1.000 [25.40]	2.244 [57.00]	
18	1.437 [36.50]	1.126 [28.60]	2.283 [58.00]	
20	1.571 [39.90]	1.248 [31.70]	2.402 [61.00]	
22	1.697 [43.10]	1.374 [34.90]	2.402 [61.00]	
24	1.835 [46.60]	1.500 [38.10]	2.598 [66.00]	
28	2.102 [53.40]	1.748 [44.40]	2.598 [66.00]	
32	2.366 [60.10]	2.000 [50.80]	2.835 [72.00]	
36	2.610 [66.30]	2.248 [57.10]	2.953 [75.00]	
40	2.850 [72.40]	2.437 [61.90]	3.071 [78.00]	

Dimensions are in Inches [mm]

CODE (***)	AVAILABLE CONDUIT SIZES C
(038)	3/8 [9.52]
(050)	1/2 [12.70]
(075)	3/4 [19.05]
(100)	1 [25.40]
(125)	1 1/4 [31.75]
(150)	1 1/2 [38.10]
(200)	2 [50.80]

SPACECRAFT COMPONENTS CORP.
3040 Clayton Street
North Las Vegas, NV 89032
Phone: 702.851.7600
Fax: 702.851.7620
Email: salesinfo@spacecraft.com
Web: www.spacecraft.com

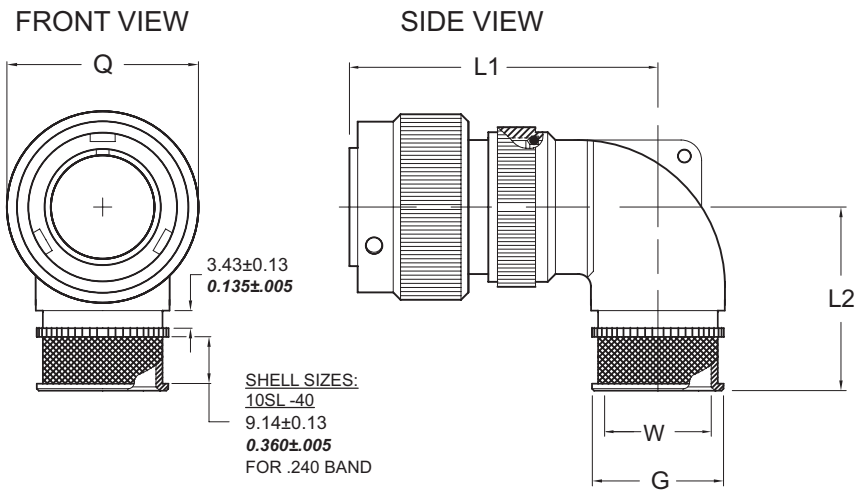

SCPB08SV* **Environmental, no grommet**
SCPBG08SV* **Environmental, no grommet with grounding spring**

SHELL SIZE	FRONT VIEW	SIDE VIEW			
	Q MAX	L1 MAX	L2 MAX	G MAX	W MIN
10SL	.898 [22.80]	1.772 [45.00]	1.181 [30.00]	.602 [15.29]	.424 [10.77]
14S	1.150 [29.20]	1.850 [47.00]	1.181 [30.00]	.707 [17.96]	.465 [11.81]
16S	1.260 [32.00]	1.890 [48.00]	1.181 [30.00]	.770 [19.56]	.580 [14.73]
16	1.260 [32.00]	2.244 [57.00]	1.181 [30.00]	.770 [19.56]	.580 [14.73]
18	1.437 [36.50]	2.283 [58.00]	1.378 [35.00]	.895 [22.73]	.685 [17.40]
20	1.571 [39.90]	2.402 [61.00]	1.378 [35.00]	1.000 [25.40]	.820 [20.83]
22	1.697 [43.10]	2.402 [61.00]	1.378 [35.00]	1.083 [27.51]	.910 [23.11]
24	1.835 [46.60]	2.598 [66.00]	1.575 [40.00]	1.215 [30.86]	1.025 [26.04]
28	2.102 [53.40]	2.598 [66.00]	1.575 [40.00]	1.300 [33.02]	1.136 [28.85]
32	2.366 [60.10]	2.835 [72.00]	1.772 [45.00]	Consult Sales	Consult Sales
36	2.610 [66.30]	2.953 [75.00]	1.969 [50.00]		
40	2.850 [72.40]	3.071 [78.00]	2.165 [55.00]		

Dimensions are in Inches [mm]

90° PLUG

08WK*/08WKG*

FRONT VIEW

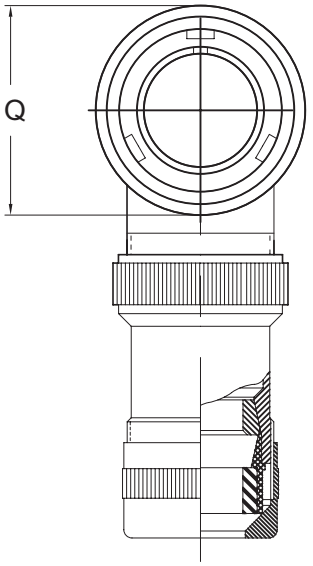

SIDE VIEW

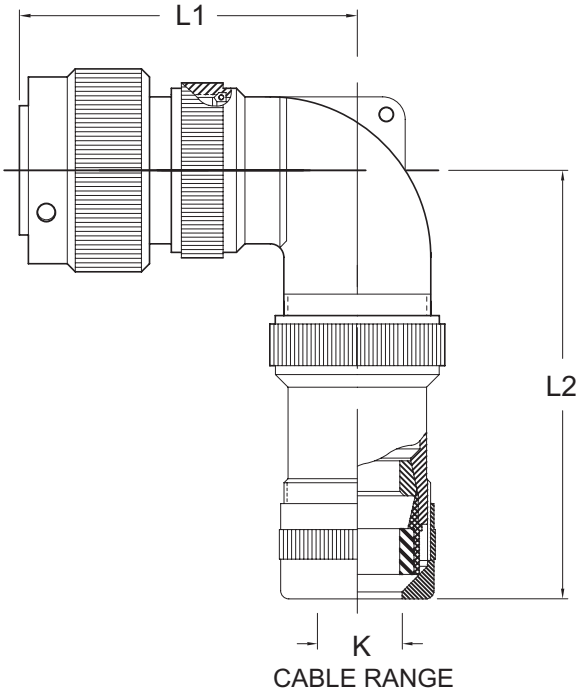

SCPB08WK* **Environmental with grommet**
SCPB08WKG* **Environmental, no grommet**

SHELL SIZE	FRONT VIEW	SIDE VIEW	
	Q MAX	L1 MAX	L2
10SL	.898 [22.80]	1.772 [45.0]	Dimension L2 is dependent on the back-shell used, the cable range and the fitting used. **Consult factory.**
14S	1.150 [29.20]	1.850 [47.0]	
16S	1.260 [32.00]	1.890 [48.0]	
16	1.260 [32.00]	2.244 [57.0]	
18	1.437 [36.50]	2.283 [58.0]	
20	1.571 [39.90]	2.402 [61.0]	
22	1.697 [43.10]	2.402 [61.0]	
24	1.835 [46.60]	2.598 [66.0]	
28	2.102 [53.40]	2.598 [66.0]	
32	2.366 [60.10]	2.835 [72.0]	
36	2.610 [66.30]	2.953 [75.0]	
40	2.850 [72.40]	3.071 [78.0]	

Dimensions are in Inches [mm]

(**) CABLE RANGE CODE	KK	
	MIN	MAX
01	.063 [1.59]	.125 [3.18]
02	.125 [3.18]	.250 [6.35]
03	.250 [6.35]	.375 [9.53]
04	.375 [9.53]	.500 [12.70]
05	.500 [12.70]	.625 [15.88]
06	.625 [15.88]	.750 [19.05]
07	.750 [19.05]	.875 [22.23]
08	.875 [22.23]	1.000 [25.40]
09	1.000 [25.40]	1.125 [28.58]
10	1.125 [28.58]	1.250 [31.75]
11	1.250 [31.75]	1.375 [34.93]
12	1.375 [34.93]	1.500 [38.10]
13	1.500 [38.10]	1.623 [41.23]
14	1.623 [41.23]	1.750 [44.45]
15	1.750 [44.45]	1.875 [47.63]
16	1.875 [47.63]	2.000 [50.80]

(**) Cable Range must be specified as part of the connector part number using Cable Range Code.

SPACECRAFT COMPONENTS CORP.
3040 Clayton Street
North Las Vegas, NV 89032
Phone: 702.851.7600
Fax: 702.851.7620
Email: salesinfo@spacecraft.com
Web: www.spacecraft.com

This group of connectors provide for the needs of:

- Audio
- Audio & Video
- Control Lighting
- HMI Lighting

AUDIO CONNECTORS

These connectors can be ordered with up to 150 conductors with wire sizes of 18 AWG to 4/0 AWG. This series also has a 1/3 turn quick release coupling mechanism.

AUDIO-VIDEO CONNECTORS

There are certain selected insert arrangements which allow up to 8 channels of video and 31 channels of audio in the same connector.

The "FR" series provides a hard black non-conductive anodize finish that insures years of service and yet the finish will show little signs of wear.

The coupling nut has been changed so that it has a larger grip area that allows for easier uncoupling and mating.

CONTROL LIGHTING

A 19 contact connector has been adapted as an "Industry Standard". There are 7 contacts in the center which are used for grounding. These 7 socket contacts protrude forward .100 inches further than the remaining 12. This assures you of a "grounding-first" or "make-before-break" situation.

Connectors may be ordered with either solder or crimp contacts. Several different backshell designs are available.

HMI LIGHTING

These connectors are used to power light fixtures from 575 watts through 18,000 watts. In order to prevent mating an incorrect plug to a receptacle, insert can be polarized.

Additionally, the backshell can be color coded: black, blue, gold, green or red, further insuring proper selection of a mating plug.

AUDIO CONNECTORS

SCPB REVERSE BAYONET SERIES

ORDERING INFORMATION

SCPB 065FR 40-150 S W (29)

SERIES PREFIX

SHELL STYLE

- **01FR** In-line receptacle with backshell.
- **020FR** Front panel mount receptacle.
- **030FR** Rear panel mount receptacle.
- **06FR** Straight plug with short coupling nut and backshell.
- **064PPFR** Panel mount plug.
- **065FR** Straight plug with extended coupling nut and backshell.

See pages 1C-98 thru 1C-101 for illustrations.

SHELL SIZE & INSERT

SEX OF CONTACTS

- **P** Male/Pin.
- **S** Female/Socket.

POLARIZATION

Normal (blank), **W, X, Y, Z.**

CLAMP TYPE

- **(XX)** PG type.
- **(XXC)** MS3057-*C

Most commonly used types are shown below.

CHANNELS	TOTAL CONTACTS	CONTACT SIZE	INSERT NUMBER
4	13	16	20-11
8	25	16	24A25
12	37	16	28-21
16	54	16	32-22
28	85	16	40-56
48	150	18	40-150

SC108

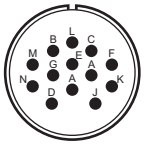

20-11†

13-#16

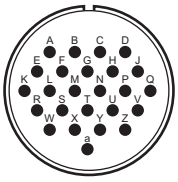

24A25

24-#16

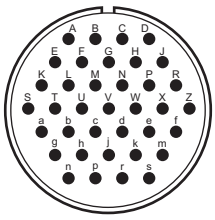

28-21†

37-#16

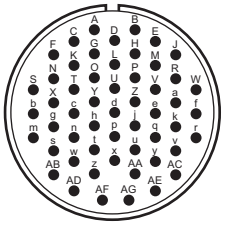

32-22†

54-#16

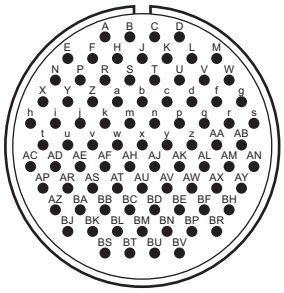

40-56†
40A56

85-#16

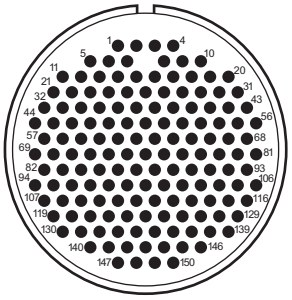

40-150
40A150

150-#18

SPACECRAFT COMPONENTS CORP.
3040 Clayton Street
North Las Vegas, NV 89032
Phone: 702.851.7600
Fax: 702.851.7620
Email: salesinfo@spacecraft.com
Web: www.spacecraft.com

COMBINATION AUDIO AND VIDEO CONNECTORS

SCPB REVERSE BAYONET SERIES

SCPB 065FR 36 V2 A10 P (29) - 59

SERIES PREFIX

SHELL STYLE
- **01FR** In-line receptacle with backshell.
- **020FR** Front panel mount receptacle.
- **030FR** Rear panel mount receptacle.
- **06FR** Straight plug with short coupling nut and backshell.
- **064PPFR** Panel mount plug.
- **065FR** Straight plug with extended coupling nut and backshell.

SHELL SIZE
32 or **36.**

QUANTITY OF VIDEO CHANNELS
- **V** Contacts, solder type, installed in insert gold plated.
- **W** Contacts, solder type, installed in insert silver plated.

COAX CABLE
- **59** RG-59/U
- **179** RG-179/U

CLAMP TYPE
- **(XX)** PG type.
- **(XXC)** MS3057-*C.

SEX OF CONTACTS
- **P** Male/Pin.
- **S** Female/Socket.

Video contacts are impedance matched.

QUANTITY OF AUDIO CHANNELS
- **A** Contacts, solder type, installed in connector, gold plated.
- **B** Contacts, solder type, installed in connector, silver plated.

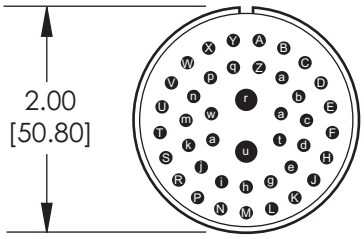

32V*A*

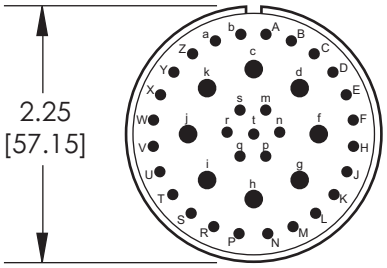

36V*A*

42 CONTACTS 2 VIDEO 40 AUDIO SIZE 16

VIDEO	LETTER	AUDIO	+ (POS)	- (NEG)	GD
1	r	1	A	B	C
2	u	2	D	E	F
		3	H	J	K
		4	L	M	N
		5	P	R	S
		6	T	U	V
		7	W	X	Y
		8	Z	a	b
		9	c	d	e
		10	g	h	i
		11	j	k	m
		12	n	p	q
		13	s	w	v

NOTE: "t" is not used

SC105

39 CONTACTS 8 VIDEO 31 AUDIO SIZE 16

VIDEO	LETTER	AUDIO	+ (POS)	- (NEG)	GD
1	c	1	A	B	C
2	h	2	D	E	F
3 (Red	f	3	H	J	K
4 (Green)	j	4	L	M	N
5 (Blue)	k	5	P	R	S
6 (Horizontal)	d	6	T	U	V
7 (Vertical)	g	7	W	X	Y
8 (Sync)	i	8	Z	a	b
		9	n	p	q
		10	m	r	s

NOTE: "t" is not used

SC106

Inserts are shown smaller than actual size

CONTROL LIGHTING CONNECTORS

CS0X AND S0X THREADED SERIES

ORDERING INFORMATION

C S0X 19 F V (29)

CONTACT TYPE
- **Blank** Solder
- **C** Crimp

SERIES PREFIX

TOTAL NUMBER OF CONTACTS
- **7, 19, 37**

CLAMP TYPE
- **(XX)** PG type.
- **(XXC)** MS3057-*C.

BACKSHELL TYPE
- **P** Panel mount, no backshell.
- **V** Backshell with left hand threads.

SEX OF CONTACTS & SHELL TYPE
- **F** Female/Socket-Receptacle.
- **M** Male/Pin-Plug.

CROSS REFERENCE

DESCRIPTION	SOCAPEX	VEAM	SPACECRAFT	SEE PAGE
Panel Mount Female Receptacle	SLEF419AR	VSC020-32S-19S	**CS0X19FP**	1C-93
In-Line Female Receptacle w/ Backshell	SLFFDR419AR	VSC01SL-32S-19S(29)*	**CS0X19FV(29)***	1C-93
In-Line Male Plug w/ Backshell	SLFMD419AR	VSC06SL-32S-19P(29)*	**CS0X19MV(29)***	1C-94
Panel Mount Male Plug	SLEME419AR	VSC26-32S-19P	**CS0X19MP**	1C-94

BACKSHELLS AND SHELLS: Aluminum alloy, hard black anodize finish.
* Backshells have a left hand thread.
CONTACTS: Gold over nickel.

CS0E AND S0E SERIES

ORDERING INFORMATION

C S0E 19 F V (29)

CONTACT TYPE
- **Blank** Solder
- **C** Crimp

SERIES PREFIX

TOTAL NUMBER OF CONTACTS
- **19**

CABLE ACCOMMODATION
- **(29)** PG 29 Type.

BACKSHELL TYPE
- **P** Panel mount, no backshell.
- **V** Backshell with left hand threads.

SEX OF CONTACTS & SHELL TYPE
- **F** Female/Socket-Receptacle.
- **M** Male/Pin-Plug.

Material: Die cast aluminum

Finish: Black

Contacts: Gold over nickel

Shells are illustrated on pages 1C-93 and 1C-94.

SPACECRAFT COMPONENTS CORP.
3040 Clayton Street
North Las Vegas, NV 89032
Phone: 702.851.7600
Fax: 702.851.7620
Email: salesinfo@spacecraft.com
Web: www.spacecraft.com

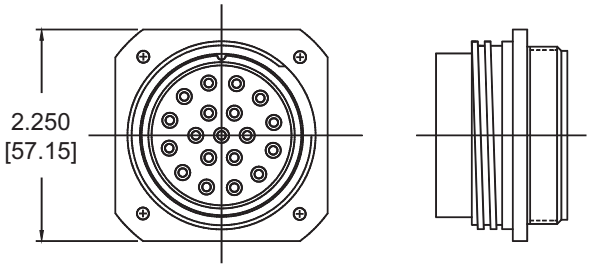

PANEL MOUNT RECEPTACLE (C)S0X19FP or (C)S0E19FP

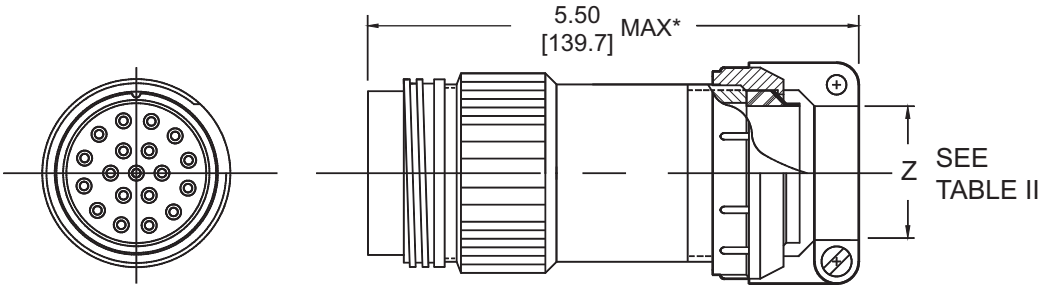

IN-LINE RECPETACLE (C)S0X19FV(XX)

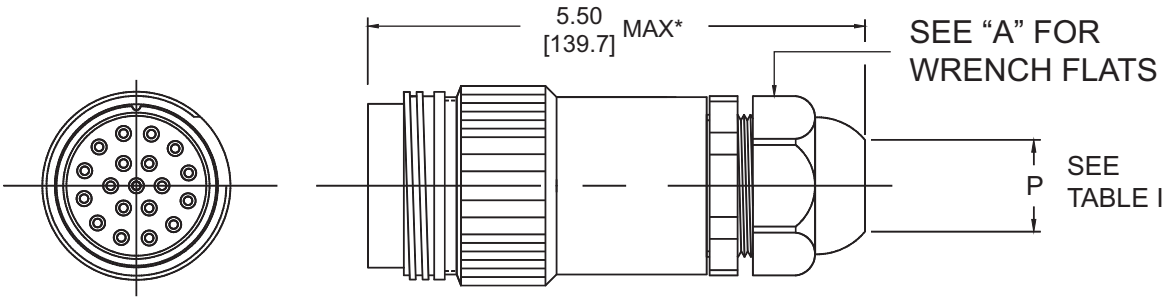

IN-LINE RECPETACLE (C)S0X19FV(XX) or (C)S0E19FV(XX)

TABLE I. CABLE RANGE CODE

(XX) CLAMP CODE	TYPE	P CABLE RANGE	A WRENCH FLATS
07R	PG7	0.08-0.20 [2.0-5.0]	.591 [15.0]
07	PG7	0.12-0.26 [3.0-6.5]	.591 [15.0]
09R	PG9	0.08-0.24 [2.0-6.0]	.748 [19.0]
09	PG9	0.16-0.31 [4.0-8.0]	.748 [19.0]
11R	PG11	0.12-0.28 [3.0-7.0]	.866 [22.0]
11	PG11	0.20-0.39 [5.0-10.0]	.866 [22.0]
13R	PG13.5	0.20-0.35 [5.0-9.0]	.945 [24.0]
13	PG13.5	0.24-0.47 [6.0-12.0]	.945 [24.0]
16R	PG16	0.28-0.47 [7.0-12.0]	1.063 [27.0]
16	PG16	0.39-0.55 [10.0-14.0]	1.063 [27.0]
21R	PG21	0.35-0.63 [9.0-16.0]	1.299 [33.0]
21	PG21	0.51-0.71 [13.0-18.0]	1.299 [33.0]
29R	PG29	0.47-0.79 [12.0-20.0]	1.654 [42.0]
29	PG29	0.71-0.98 [18.0-25.0]	1.654 [42.0]
36R	PG36	0.79-1.02 [20.0-26.0]	2.087 [53.0]
36	PG36	0.87-1.26 [22.0-32.0]	2.087 [53.0]
42	PG42	1.18-1.50 [30.0-38.0]	2.362 [60.0]
48	PG48	1.34-1.73 [34.0-44.0]	2.559 [65.0]

Dimensions are in Inches [mm]

TABLE II. CLAMP CODE

(XX) CLAMP CODE	Z CABLE RANGE	
	OPEN	CLOSED
04C	.312 [7.92]	.095 [2.40]
06C	.438 [11.12]	.230 [5.84]
08C	.531 [13.48]	.315 [8.00]
10C	.625 [15.87]	.378 [9.60]
12C	.748 [19.00]	.445 [11.30]
16C	.937 [23.80]	.610 [15.50]
20C	1.250 [31.75]	.921 [23.40]
24C	1.378 [35.00]	.921 [23.40]
28C	1.624 [41.25]	1.177 [29.90]
32C	1.874 [47.60]	1.374 [34.90]

Dimensions are in Inches [mm]

* Dimension is dependent on the back-shell used, the cable range and the fitting used. Consult factory.

CONTROL LIGHTING CONNECTORS

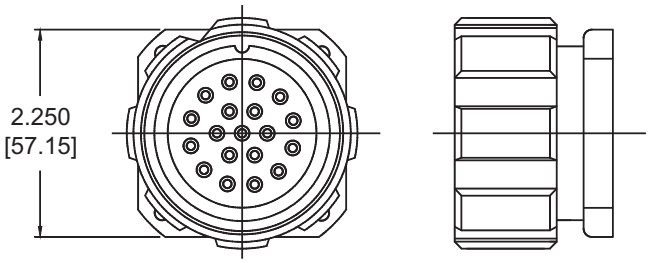

PANEL MOUNT PLUG (C)S0X19MP or (C)S0E19MP

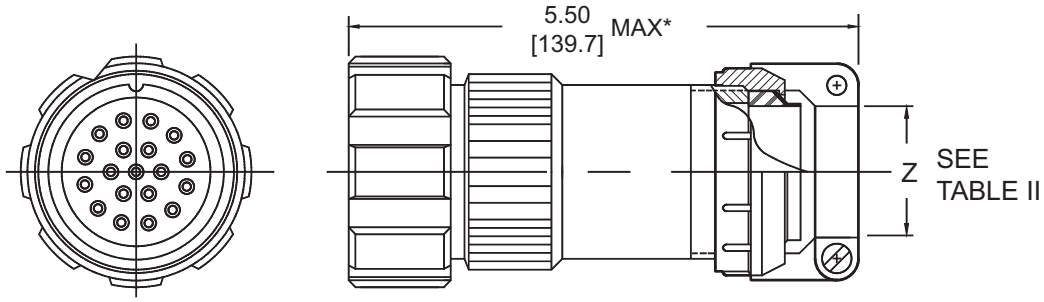

PLUG (C)S0X19MV(XX)

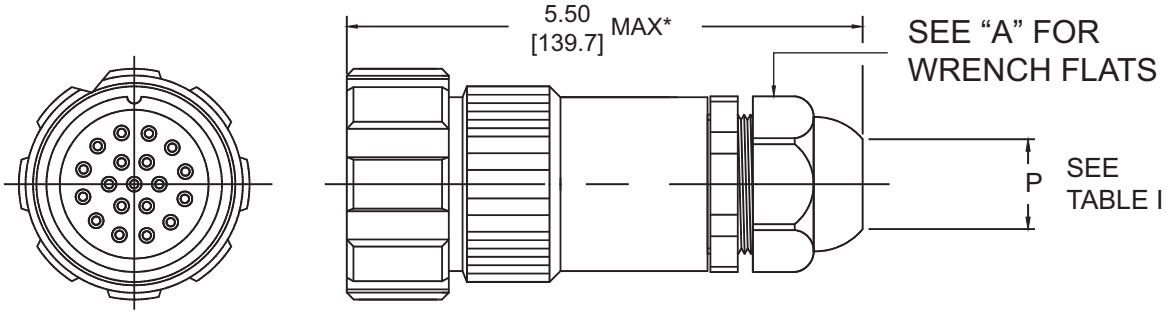

PLUG (C)S0X19MV(XX) or (C)S0E19MV(XX)

TABLE I. CABLE RANGE CODE

(XX) CLAMP CODE	TYPE	P CABLE RANGE	A WRENCH FLATS
07R	PG7	0.08-0.20 [2.0-5.0]	.591 [15.0]
07	PG7	0.12-0.26 [3.0-6.5]	.591 [15.0]
09R	PG9	0.08-0.24 [2.0-6.0]	.748 [19.0]
09	PG9	0.16-0.31 [4.0-8.0]	.748 [19.0]
11R	PG11	0.12-0.28 [3.0-7.0]	.866 [22.0]
11	PG11	0.20-0.39 [5.0-10.0]	.866 [22.0]
13R	PG13.5	0.20-0.35 [5.0-9.0]	.945 [24.0]
13	PG013.5	0.24-0.47 [6.0-12.0]	.945 [24.0]
16R	PG16	0.28-0.47 [7.0-12.0]	1.063 [27.0]
16	PG16	0.39-0.55 [10.0-14.0]	1.063 [27.0]
21R	PG21	0.35-0.63 [9.0-16.0]	1.299 [33.0]
21	PG21	0.51-0.71 [13.0-18.0]	1.299 [33.0]
29R	PG29	0.47-0.79 [12.0-20.0]	1.654 [42.0]
29	PG29	0.71-0.98 [18.0-25.0]	1.654 [42.0]
36R	PG36	0.79-1.02 [20.0-26.0]	2.087 [53.0]
36	PG36	0.87-1.26 [22.0-32.0]	2.087 [53.0]
42	PG42	1.18-1.50 [30.0-38.0]	2.362 [60.0]
48	PG48	1.34-1.73 [34.0-44.0]	2.559 [65.0]

Dimensions are in Inches [mm]

TABLE II. CLAMP CODE

(XX) CLAMP CODE	Z CABLE RANGE	
	OPEN	CLOSED
04C	.312 [7.92]	.094 [2.40]
06C	.438 [11.12]	.230 [5.84]
08C	.531 [13.48]	.315 [8.00]
10C	.625 [15.87]	.378 [9.60]
12C	.748 [19.00]	.445 [11.30]
16C	.937 [23.80]	.610 [15.50]
20C	1.250 [31.75]	.921 [23.40]
24C	1.378 [35.00]	.921 [23.40]
28C	1.624 [41.25]	1.177 [29.90]
32C	1.874 [47.60]	1.374 [34.90]

Dimensions are in Inches [mm]

* Dimension is dependent on the backshell used, the cable range and the fitting used. Consult factory.

SPACECRAFT COMPONENTS CORP.
3040 Clayton Street
North Las Vegas, NV 89032
Phone: 702.851.7600
Fax: 702.851.7620
Email: salesinfo@spacecraft.com
Web: www.spacecraft.com

ORDERING INFORMATION

SCPB 065FR 24-2 S W (29)

SERIES PREFIX

SHELL STYLE

- **01FR** In-line receptacle with backshell.
- **020FR** Front panel mount receptacle.
- **030FR** Rear panel mount receptacle.
- **06FR** Straight plug with short coupling nut and backshell.
- **064PPFR** Panel mount plug.
- **065FR** Straight plug with extended coupling nut and backshell.

SHELL SIZE & INSERT
See pages 4C-1 thru 4C-32.

SEX OF CONTACTS

- **P** Male/Pin.
- **S** Female/Socket.

POLARIZATION
Normal (blank), **W, X, Y, Z.**

CLAMP TYPE

CROSS REFERENCE

DESCRIPTION	VEAM	SPACECRAFT
In-Line Receptacle w/ Backshell	CIR01FR	**SCPB01FR**
Front Panel Mount Receptacle	CIR020FR	**SCPB020FR**
Panel Mount Plug	CIR064PPFR	**SCPB064PPFR**
Straight Plug with Backshell	CIR065FR	**SCPB065FR**

BACKSHELLS AND SHELLS: Aluminum alloy, black hard anodize finish.
CONTACTS: Silver plated crimp contacts. Solder contacts available on request.

HMI LIGHTING CONNECTORS

SCPB REVERSE BAYONET SERIES

Most popular HMI type connectors are listed below. Contact Sales for other types.

APPLICATION	SPACECRAFT PART NUMBER	SEX
2.5/4K Input Power Cable End Female Plug	SCPB065FR28-3S(29R)	Socket
2.5/4K Input Power Panel Mount Male Receptacle	SCPB030FR28-3P	Pin
6/12/18K In-Line Male Receptacle	SCPB01FR28-6P(290S)	Pin
6/12/18K Input Power Cable End Female Plug	SCPB065FR28-6S(290S)	Socket
6/12/18K Input Power Panel Mount Male Receptacle	SCPB030FR28-6P-AM	Pin
6/12/18K Panel Mount Female Plug	SCPB064PPFR28-6S	Socket
12K Cable End Male Receptacle	SCPB01FR36-3P(36)	Pin
12K Input Power Cable End Female Plug	SCPB065FR36-3S(36)	Socket
12K Input Power Panel Mount Male Receptacle	SCPB030FR36-3P	Pin
12K Panel Mount Female Plug	SCPB064PPFR36-3S	Socket
ARRIFLEX 6K In-Line Female Plug	SCPB065FR28-22S-326(290S)	Socket
ARRIFLEX 6K In-Line Male Receptacle	SCPB01FR28-22P-326(290S)	Pin
ARRIFLEX 6K Panel Mount Female Plug	SCPB064PPFR28-22S	Socket
ARRIFLEX 6K Panel Mount Male Receptacle	SCPB020FR28-22P	Pin
CINEMILLS 12/18K In-Line Male Plug	SCPB065FR28-10P(20C)	Pin
CINEMILLS 12/18K In-Line Female Receptacle	SCPB01FR28-10S(20C)	Socket
CINEMILLS 12/18K Panel Mount Female Receptacle	SCPB030FR28-10S	Socket
CINEMILLS 12/18K Panel Mount Male Plug	SCPB064PPFR28-10P	Pin
LTM 575/1200 In-Line Female Receptacle	SCPB01FR20-15S-18(922)	Socket
LTM 575/1200 In-Line Male Plug	SCPB065FR20-15P-18(922)	Pin
LTM 575/1200 Panel Mount Female Receptacle	SCPB020FR20-15S-18	Socket
LTM 575/1200 Panel Mount Male Plug	SCPB064PPFR20-15P	Pin
LTM 4K In-Line Female Receptacle	SCPB01FR924-11S(942)BY	Socket
LTM 4K In-Line Male Plug	SCPB065FR924-11P(942)BY	Pin
LTM 4K Panel Mount Female Receptacle	SCPB020FR924-11S	Socket
LTM 4K Panel Mount Male Plug	SCPB064PPFR924-11P	Pin
LTM 6/12/18K In-Line Female Receptacle	SCPB01FR28A9S-122-R8(20C)	Socket
LTM 6/12/18K In-Line Male Plug	SCPB065FR28A9P-GM-122-R8(20C)	Pin
LTM 6/12/18K Panel Mount Female Receptacle	SCPB020FR28A9S-122-R8	Socket
LTM 6/12/18K Panel Mount Male Plug	SCPB064PPFR12-28A9P-GM	Pin
STRAND 575W In-Line Female Receptacle	SCPB01FR24-2SZ(941)BG	Socket
STRAND 575W In-Line Male Plug	SCPB065FR24-2PZ(941)BG	Pin
STRAND 575W Panel Mount Female Receptacle	SCPB030FR24-2SZ	Socket
STRAND 575W Panel Mount Male Plug	SCPB064PPFR24-2PZ	Pin
STRAND 2.5K In-Line Female Receptacle	SCPB01FR24-2S(941)BR	Socket
STRAND 2.5K In-Line Male Plug	SCPB06524-2P(941)BR	Pin
STRAND 2.5K Panel Mount Female Receptacle	SCPB030FR24-2S	Socket
STRAND 2.5K Panel Mount Male Plug	SCPB064PPFR24-2P	Pin
STRAND 4K In-Line Female Receptacle	SCPB01FR24-11S(941)BB	Socket
STRAND 4K In-Line Male Plug	SCPB065FR24-11P(941)BB	Pin
STRAND 4K Panel Mount Female Receptacle	SCPB030FR24-11S	Socket
STRAND 4K Panel Mount Male Plug	SCPB064PPFR24-11P	Pin
STRAND 6K In-Line Female Receptacle	SCPB01FR32-68S(290S)	Socket
STRAND 6K In-Line Male Plug	SCPB065FR32-68P(290S)	Pin
STRAND 6K Panel Mount Female Receptacle	SCPB030FR32-68S	Socket
STRAND 6K Panel Mount Male Plug	SCPB064PPFR32-68P	Pin
STRAND 12K In-Line Female Receptacle	SCPB01FR40A10S(290S)	Socket
STRAND 12K In-Line Male Plug	SCPB065FR40A10P(290S)	Pin
STRAND 12K Panel Mount Female Receptacle	SCPB030FR40A10S	Socket
STRAND 12K Panel Mount Male Plug	SCPB064PPFR40A10P	Pin
STRAND 12K Panel Mount Male Plug W/LKG RING	SCPB064PPFR24-2PW	Pin
STRAND 12K In-Line Male Plug	SCPB065FR24-2PW(941)BY	Pin
STRAND 12K In-Line Female Receptacle	SCPB01FR24-2SW(941)BY	Socket
STRAND 12K Panel Mount Female Receptacle	SCPB030FR24-2SW	Socket

SPACECRAFT COMPONENTS CORP.
3040 Clayton Street
North Las Vegas, NV 89032
Phone: 702.851.7600
Fax: 702.851.7620
Email: salesinfo@spacecraft.com
Web: www.spacecraft.com

HMI LIGHTING CONNECTORS

WALL MOUNT RECEPTACLE

FRONT PANEL MOUNT SCPB020FR
REAR PANEL MOUNT SCPB030FR

FRONT VIEW

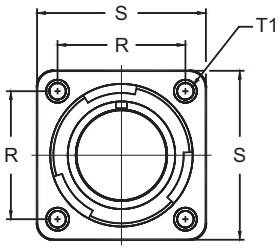

SIDE VIEW

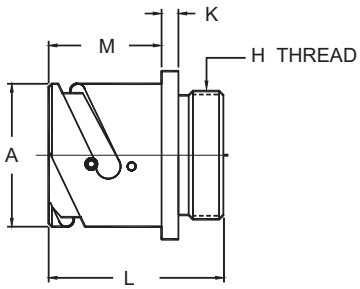

FINISH:
BLACK ANODIZE

CONTACTS:
F80 SILVER PLATED
CRIMP CONTACTS

SHELL SIZE	FRONT VIEW			SIDE VIEW				SHELL TYPE	
								020	030
	R ±.004 [±0.1]	S ±.012 [±0.3]	T1 +.004 [+0.1] -.000 [-0.0]	A +.000 [+0.00] -.006 [-0.15]	H THREAD CLASS 2A	K ±.008 [±0.2]	L ±.012 [±0.3]	M +.016 [+0.4] -.000 [-0.0]	M +.016 [+0.4] -.000 [-0.0]
10SL	.717 [18.20]	1.000 [25.40]	.126 [3.20]	.717 [18.20]	5/8-24 UNEF	.110 [2.80]	1.087 [27.60]	.559 [14.20]	.717 [18.20]
14S	.906 [23.00]	1.181 [30.00]	.126 [3.20]	.969 [24.60]	3/4-20 UNEF	.126 [3.20]	1.087 [27.60]	.559 [14.20]	.717 [18.20]
16S	.969 [24.60]	1.280 [32.50]	.126 [3.20]	1.079 [27.40]	7/8-20 UNEF	.126 [3.20]	1.087 [27.60]	.559 [14.20]	.717 [18.20]
16	.969 [24.60]	1.280 [32.50]	.126 [3.20]	1.079 [27.40]	7/8-20 UNEF	.126 [3.20]	1.331 [33.80]	.748 [19.00]	.907 [23.05]
18	1.063 [27.00]	1.378 [35.00]	.126 [3.20]	1.213 [30.80]	1-20 UNEF	.157 [4.00]	1.331 [33.80]	.748 [19.00]	.907 [23.05]
20	1.157 [29.40]	1.496 [38.00]	.126 [3.20]	1.346 [34.20]	1 1/8-18 UNEF	.157 [4.00]	1.331 [33.80]	.748 [19.00]	.907 [23.05]
22	1.252 [31.80]	1.614 [41.00]	.126 [3.20]	1.472 [37.40]	1 1/4-18 UNEF	.157 [4.00]	1.331 [33.80]	.748 [19.00]	.907 [23.05]
24	1.374 [34.90]	1.752 [44.50]	.146 [3.70]	1.610 [40.90]	1 3/8-18 UNEF	.157 [4.00]	1.409 [35.80]	.811 [20.60]	.907 [23.05]
28	1.563 [39.70]	2.000 [50.80]	.146 [3.70]	1.839 [46.70]	1 5/8-18 UNEF	.157 [4.00]	1.409 [35.80]	.811 [20.60]	.947 [24.05]
32	1.752 [44.50]	2.244 [57.00]	.169 [4.30]	2.102 [53.40]	1 7/8-16 UN	.157 [4.00]	1.469 [37.30]	.874 [22.20]	.947 [24.05]
36	1.937 [49.20]	2.500 [63.50]	.169 [4.30]	2.346 [59.60]	2 1/16-16 UN	.157 [4.00]	1.469 [37.30]	.874 [22.20]	.947 [24.05]
40	2.185 [55.50]	2.752 [69.90]	.169 [4.30]	2.579 [65.50]	2 5/16-16 UNS	.157 [4.00]	1.469 [37.30]	.874 [22.20]	.947 [24.05]

Dimensions are in Inches [mm]

WALL MOUNT PLUG

SCPB064PPFR

FRONT VIEW

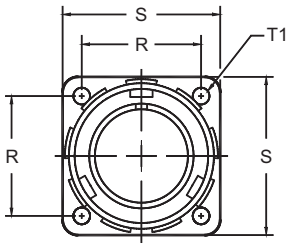

SIDE VIEW

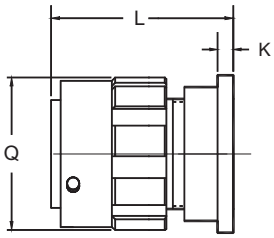

FINISH: BLACK ANODIZE
CONTACTS: F80 SILVER PLATED CRIMP CONTACTS

SHELL SIZE	FRONT VIEW			SIDE VIEW		
	R ±.004 [±0.1]	S ±.031 [±0.8]	T1 +.008 [+0.2] -.004 [-0.1]	K +.020 [+0.5] -.008 [-0.2]	L MAX.	Q MAX.
10SL	.717 [18.20]	1.000 [25.40]	.126 [3.20]	.110 [2.80]	1.177 [29.90]	.996 [25.30]
14S	.906 [23.00]	1.181 [30.00]	.126 [3.20]	.126 [3.20]	1.177 [29.90]	1.248 [31.70]
16S	.969 [24.60]	1.280 [32.50]	.126 [3.20]	.126 [3.20]	1.382 [35.10]	1.413 [35.90]
16	.969 [24.60]	1.280 [32.50]	.126 [3.20]	.126 [3.20]	1.382 [35.10]	1.413 [35.90]
18	1.063 [27.00]	1.378 [35.00]	.126 [3.20]	.126 [3.20]	1.583 [40.20]	1.555 [39.50]
20	1.157 [29.40]	1.496 [38.00]	.126 [3.20]	.126 [3.20]	1.724 [43.80]	1.689 [42.90]
22	1.252 [31.80]	1.614 [41.00]	.126 [3.20]	.150 [3.80]	1.724 [43.80]	1.815 [46.10]
24	1.374 [34.90]	1.752 [44.50]	.146 [3.70]	.150 [3.80]	1.724 [43.80]	1.949 [49.50]
28	1.563 [39.70]	2.000 [50.80]	.146 [3.70]	.157 [4.00]	1.732 [44.00]	2.240 [56.90]
32	1.752 [44.50]	2.244 [57.00]	.169 [4.30]	.157 [4.00]	1.776 [45.10]	2.508 [63.70]
36	1.937 [49.20]	2.500 [63.50]	.169 [4.30]	.157 [4.00]	1.776 [45.10]	2.760 [70.10]
40	2.185 [55.50]	2.752 [69.90]	.205 [5.20]	.157 [4.00]	1.776 [45.10]	2.980 [75.70]

Dimensions are in Inches [mm]

HMI LIGHTING CONNECTORS

IN-LINE RECEPTACLE

SCPB01FR

SCPBO65FR ENVIRONMENTAL

EXAMPLE PART NUMBER: SCPB01FR24-28P-(XX)

CLAMP CODE

FINISH: BLACK ANODIZE

CONTACTS: F80 SILVER PLATED CRIMP CONTACTS

FRONT VIEW

SIDE VIEW

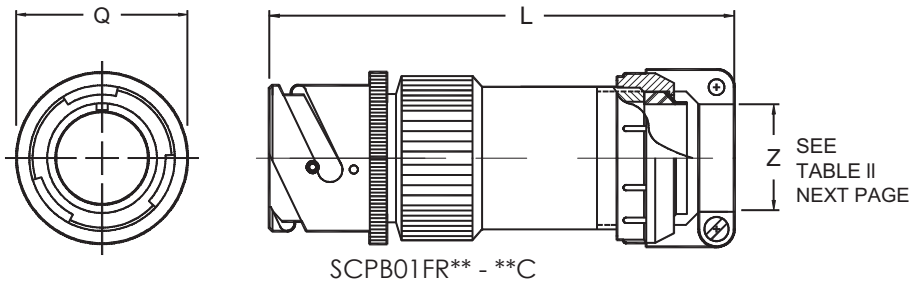

SCPB01FR** - **C

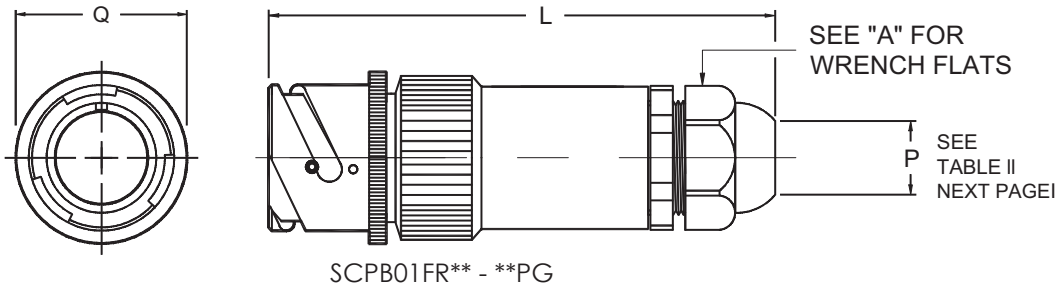

SCPB01FR** - **PG

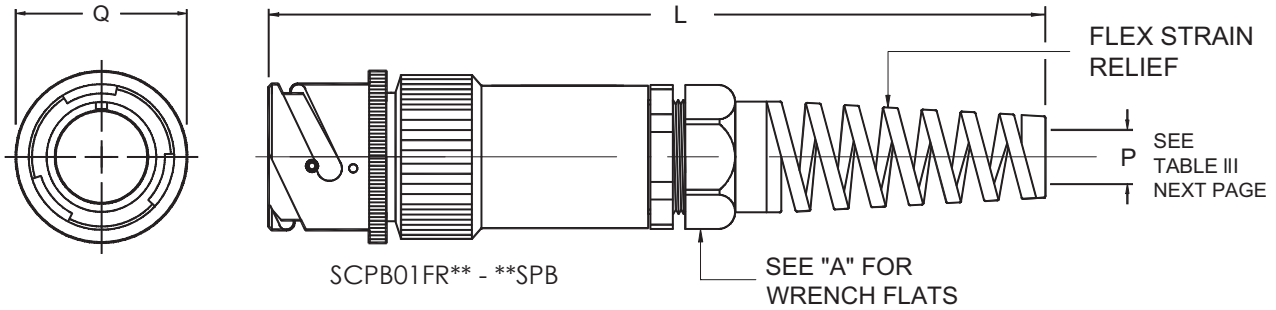

SCPB01FR** - **SPB

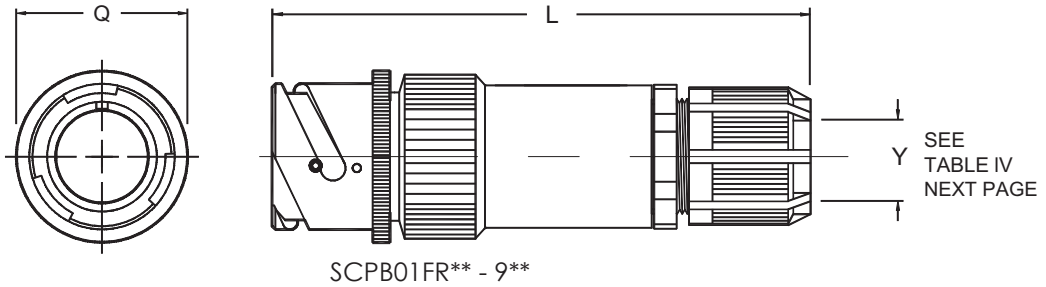

SCPB01FR** - 9**

SPACECRAFT COMPONENTS CORP.
3040 Clayton Street
North Las Vegas, NV 89032
Phone: 702.851.7600
Fax: 702.851.7620
Email: salesinfo@spacecraft.com
Web: www.spacecraft.com

TABLE I

SHELL SIZE	FRONT VIEW Q DIA. MAX.	SIDE VIEW L
10SL	.886 [22.50]	Dimension L is dependent on the backshell used, the cable range and the fitting used. **Consult factory.**
14S	1.161 [29.50]	
16S	1.240 [31.50]	
16	1.240 [31.50]	
18	1.358 [34.50]	
20	1.476 [37.50]	
22	1.594 [40.50]	
24	1.752 [44.50]	
28	1.969 [50.00]	
32	2.224 [56.50]	
36	2.480 [63.00]	
40	2.717 [69.00]	

Dimensions are in Inches [mm]

TABLE II. CLAMP CODE

(XX) CLAMP CODE	Z CABLE RANGE OPEN	Z CABLE RANGE CLOSED
04C	.312 [7.92]	.094 [2.40]
06C	.438 [11.12]	.230 [5.84]
08C	.531 [13.48]	.315 [8.00]
10C	.625 [15.87]	.378 [9.60]
12C	.748 [19.00]	.445 [11.30]
16C	.937 [23.80]	.610 [15.50]
20C	1.250 [31.75]	.921 [23.40]
24C	1.378 [35.00]	.921 [23.40]
28C	1.624 [41.25]	1.177 [29.90]
32C	1.874 [47.60]	1.374 [34.90]

Dimensions are in Inches [mm]

TABLE III. CABLE RANGE CODE

(XX) CABLE CODE FLEX STRAIN RELIEF	(XX) CABLE CODE NO STRAIN RELIEF	TYPE	P CABLE RANGE	A WRENCH FLATS
SPB07R	07R	PG7	0.08-0.20 [2.0-5.0]	.591 [15.0]
SPB07	07	PG7	0.12-0.26 [3.0-6.5]	.591 [15.0]
SPB09R	09R	PG9	0.08-0.24 [2.0-6.0]	.748 [19.0]
SPB09	09	PG9	0.16-0.31 [4.0-8.0]	.748 [19.0]
SPB11R	11R	PG11	0.12-0.28 [3.0-7.0]	.866 [22.0]
SPB11	11	PG11	0.20-0.39 [5.0-10.0]	.866 [22.0]
SPB13R	13R	PG13.5	0.20-0.35 [5.0-9.0]	.945 [24.0]
SPB13	13	PG13.5	0.24-0.47 [6.0-12.0]	.945 [24.0]
SPB16R	16R	PG16	0.28-0.47 [7.0-12.0]	1.063 [27.0]
SPB16	16	PG16	0.39-0.55 [10.0-14.0]	1.063 [27.0]
SPB21R	21R	PG21	0.35-0.63 [9.0-16.0]	1.299 [33.0]
SPB21	21	PG21	0.51-0.71 [13.0-18.0]	1.299 [33.0]
SPB29R	29R	PG29	0.47-0.79 [12.0-20.0]	1.654 [42.0]
SPB29	29	PG29	0.71-0.98 [18.0-25.0]	1.654 [42.0]
SPB36R	36R	PG36	0.79-1.02 [20.0-26.0]	2.087 [53.0]
SPB36	36	PG36	0.87-1.26 [22.0-32.0]	2.087 [53.0]
SPB42	42	PG42	1.18-1.50 [30.0-38.0]	2.362 [60.0]
SPB48	48	PG48	1.34-1.73 [34.0-44.0]	2.559 [65.0]

Dimensions are in Inches [mm]

TABLE IV

SHELL SIZES	CABLE CODE	Y CABLE RANGE
10SL, 12S, 14S, 16, 16S, 18, 20	920	.125-.375 [3.0-9.4]
	921	.310-.560 [7.9-14.2]
	922	.500-.750 [12.7-19.1]
18, 20, 22, 24	930	.125-.375 [3.0-9.4]
	931	.310-.560 [7.9-14.2]
	932	.500-.750 [12.7-19.1]
24, 28, 32, 36, 40	940	.310-.560 [7.9-14.2]
	941	.500-.750 [12.7-19.1]
	942	.700-.950 [17.8-24.1]

Dimensions are in Inches [mm]

HMI LIGHTING CONNECTORS

STRAIGHT PLUG

SCPB065FR

SCPB065FR ENVIRONMENTAL

EXAMPLE PART NUMBER: SCPB065FR24-28P-(XX)

CLAMP CODE

FINISH: BLACK ANODIZE

CONTACTS: F80 SILVER PLATED CRIMP CONTACTS

FRONT VIEW

SIDE VIEW

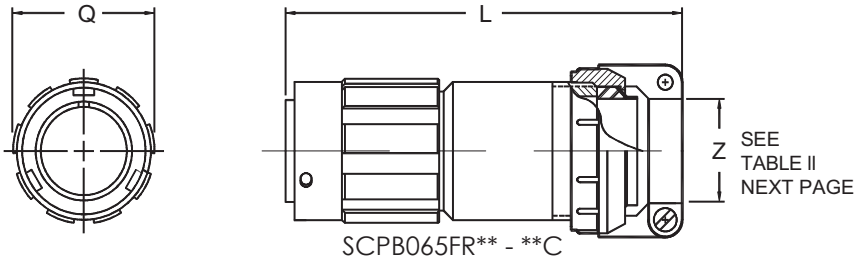

SCPB065FR** - **C

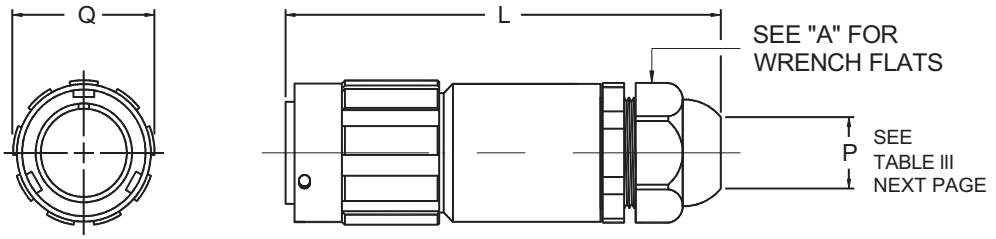

SCPB065FR** - **PG

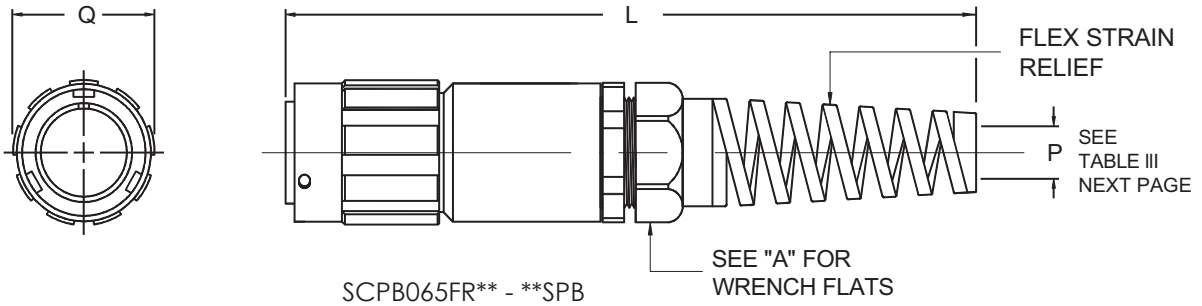

SCPB065FR** - **SPB

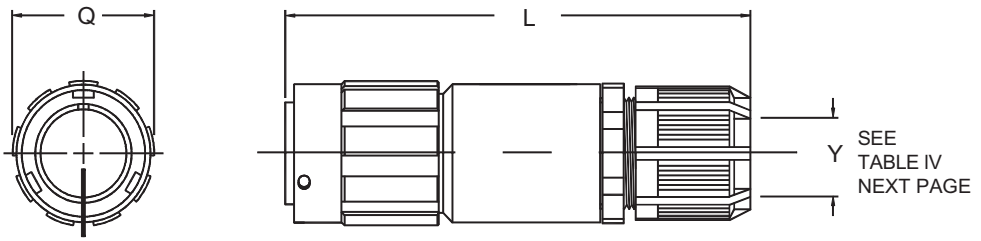

SCPB065FR** - 9**

SPACECRAFT COMPONENTS CORP.
3040 Clayton Street
North Las Vegas, NV 89032
Phone: 702.851.7600
Fax: 702.851.7620
Email: salesinfo@spacecraft.com
Web: www.spacecraft.com

TABLE I

SHELL SIZE	FRONT VIEW Q DIA. MAX.	SIDE VIEW L
10SL	.886 [22.50]	Dimension L is dependent on the backshell used, the cable range and the fitting used. **Consult factory.**
14S	1.161 [29.50]	
16S	1.240 [31.50]	
16	1.240 [31.50]	
18	1.358 [34.50]	
20	1.476 [37.50]	
22	1.594 [40.50]	
24	1.752 [44.50]	
28	1.969 [50.00]	
32	2.224 [56.50]	
36	2.480 [63.00]	
40	2.717 [69.00]	

Dimensions are in Inches [mm]

TABLE II. CLAMP CODE

(XX) CLAMP CODE	Z CABLE RANGE OPEN	Z CABLE RANGE CLOSED
04C	.312 [7.92]	.094 [2.40]
06C	.438 [11.12]	.230 [5.84]
08C	.531 [13.48]	.315 [8.00]
10C	.625 [15.87]	.378 [9.60]
12C	.748 [19.00]	.445 [11.30]
16C	.937 [23.80]	.610 [15.50]
20C	1.250 [31.75]	.921 [23.40]
24C	1.378 [35.00]	.921 [23.40]
28C	1.624 [41.25]	1.177 [29.90]
32C	1.874 [47.60]	1.374 [34.90]

Dimensions are in Inches [mm]

TABLE III. CABLE RANGE CODE

(XX) CABLE CODE FLEX STRAIN RELIEF	(XX) CABLE CODE NO STRAIN RELIEF	TYPE	P CABLE RANGE	A WRENCH FLATS
SPB07R	07R	PG7	0.08-0.20 [2.0-5.0]	.591 [15.0]
SPB07	07	PG7	0.12-0.26 [3.0-6.5]	.591 [15.0]
SPB09R	09R	PG9	0.08-0.24 [2.0-6.0]	.748 [19.0]
SPB09	09	PG9	0.16-0.31 [4.0-8.0]	.748 [19.0]
SPB11R	11R	PG11	0.12-0.28 [3.0-7.0]	.866 [22.0]
SPB11	11	PG11	0.20-0.39 [5.0-10.0]	.866 [22.0]
SPB13R	13R	PG13.5	0.20-0.35 [5.0-9.0]	.945 [24.0]
SPB13	13	PG13.5	0.24-0.47 [6.0-12.0]	.945 [24.0]
SPB16R	16R	PG16	0.28-0.47 [7.0-12.0]	1.063 [27.0]
SPB16	16	PG16	0.39-0.55 [10.0-14.0]	1.063 [27.0]
SPB21R	21R	PG21	0.35-0.63 [9.0-16.0]	1.299 [33.0]
SPB21	21	PG21	0.51-0.71 [13.0-18.0]	1.299 [33.0]
SPB29R	29R	PG29	0.47-0.79 [12.0-20.0]	1.654 [42.0]
SPB29	29	PG29	0.71-0.98 [18.0-25.0]	1.654 [42.0]
SPB36R	36R	PG36	0.79-1.02 [20.0-26.0]	2.087 [53.0]
SPB36	36	PG36	0.87-1.26 [22.0-32.0]	2.087 [53.0]
SPB42	42	PG42	1.18-1.50 [30.0-38.0]	2.362 [60.0]
SPB48	48	PG48	1.34-1.73 [34.0-44.0]	2.559 [65.0]

Dimensions are in Inches [mm]

TABLE IV

SHELL SIZES	CABLE CODE	Y CABLE RANGE
10SL, 12S, 14S, 16, 16S, 18, 20	920	.125-.375 [3.0-9.4]
	921	.310-.560 [7.9-14.2]
	922	.500-.750 [12.7-19.1]
18, 20, 22, 24	930	.125-.375 [3.0-9.4]
	931	.310-.560 [7.9-14.2]
	932	.500-.750 [12.7-19.1]
24, 28, 32, 36, 40	940	.310-.560 [7.9-14.2]
	941	.500-.750 [12.7-19.1]
	942	.700-.950 [17.8-24.1]

Dimensions are in Inches [mm]

SHELL SIZE 52 TRANSIT CONNECTORS

INTRODUCTION

This series of connectors has been developed to be intermateable and interchangeable with the ITT Veam CIR290 Series.

Our standard part numbering system differs from the one used by ITT Veam. The notable differences are the suffix codes as noted below.

ITT VEAM	SPACECRAFT
PF = Receptacle - Socket Contacts	SCPBH020/030 (Class + Insert) S*
PV = Plug – Socket Contacts	SCPBH06 (Class + Insert) S*
SF = Receptacle – Pin Contacts	SCPBH020/030 (Class + Insert) P*
SV = Plug = Pin Contacts	SCPBH06 (Class + Insert) P*
SLV = 90° Plug – Pin Contacts	SCPBH08 (Class + Insert) P*
PVL = 90° Plug – Socket Contacts	SCPBH08 (Class + Insert) S*
45 = 45° Backshell	SCPBH09 (Class + Insert) P or S*

This series is used principally in the transit rail industry. Their main characteristic is the fast and precise coupling of the receptacle and plug. Three bayonet ramps on the receptacle connector allow for a fast and perfect coupling with only a one-quarter turn of the coupling nut. The receptacle has three stainless steel studs at the top of the ramp which add additional strength and allow for multiple mating and unmating of the connectors without wear to the ramps. The coupling nut on the plug has roller studs made from stainless steel to facilitate the coupling on the ramps of the receptacle.

The mated connector withstands high vibration and shock while maintaining an excellent watertight seal. This is achieved through the use of a wave washer of stainless steel inside the coupling nut and a properly aligned gasket on the plug shell.

The coupling nut and backshell assembly can be rubber covered with different types of rubber for added protection.

These connectors accept crimp type contacts (F80) to accommodate standard AWG, coaxial, twinax and triaxial wire.

Special contacts are also available for high current application (up to 1200 amps).

GENERAL INFORMATION

SHELLS:
- Aluminum alloy with rubber covering optional
- Copper alloy or stainless steel available

INSERTS:
- Halogen-free/low smoke/low toxicity
- Chloroprene rubber
- Silicone or fluorocarbon rubber available

CONTACTS:
- Copper alloy
- Silver and gold plating
- Alumel, Chromel, Iron, Constantan materials are available

DESCRIPTION	SIZE 52	STANDARD
Number of keyways	5	1
Rubber covered coupling nut on plugs	Standard	Optional
Rubber covered backshells	Optional	Optional
Number of shell sizes	1	14
Grounding spring on plug	Optional	Optional
Halogen-free insert material	Standard	Optional

SPACECRAFT COMPONENTS CORP.
3040 Clayton Street
North Las Vegas, NV 89032
Phone: 702.851.7600
Fax: 702.851.7620
Email: salesinfo@spacecraft.com
Web: www.spacecraft.com

SHELL SIZE 52 TRANSIT CONNECTORS

ORDERING INFORMATION

SCPB H 030 FP 52 - 58 P W F80 F0

SERIES
- **SCPB** Reverse Bayonet Coupling

INSERT MATERIAL
- **Blank** Neoprene
- **H** Halogen Free

SHELL SIZE
- **020R** Front Panel Mount Receptacle w/o Backshell
- **030** Rear Panel Mount Receptacle w/o Backshell
- **01** In Line Receptacle
- **06** Straight Plug
- **08** 90 Degree Plug
- **09** 45 Degree Plug
- **064** Panel Mount Plug
- **05** Dummy Receptacle
- **TFM** Receptacle Cover
- **TF** Dust Cap for Receptacle
- **TV** Dust Cap for Plug

SERVICE CLASS
See Table below

RECEPTACLE SHELL MOUNTING HOLES
- **FP** Thru Mounting Holes for 030 Shell Only

MODIFICATION CODE
- **A95** Gold Contacts
- **F0** Contacts not supplied
- **005** Black Anodize
- **(28C)** Cable Clamp 3057-28C
- **(32C)** Cable Clamp 3057-32C
- **(48)** PG48 Fitting
- **(50)** Cable Clamp -50-57.7mm Cable range
- **(62)** Cable Clamp -62-65mm Cable range
- **519** Stainless steel, passivated

TYPE OF CONTACTS
- **F80** Crimp Contacts
- **Blank** Solder Contacts

POLARIZATION OF INSERT
(See Page 1C-111)

CONTACT STYLE
- **P** Pin/Male
- **S** Socket Female

INSERT ARRANGEMENTS: (SEE PAGE **1C-111**)

SHELL SIZE
52

SHELLS:
- Aluminum alloy with rubber covering optional
- Copper alloy or stainless steel available

INSERTS:
- Halogen-free/low smoke/low toxicity
- Chloroprene rubber
- Silicone or fluorocarbon rubber available

CONTACTS:
- Copper alloy
- Silver and gold plating
- Alumel, Chromel, Iron, Constantan materials are available

SERVICE CLASS

CLASS	DESCRIPTION
R52-***	Environmental, Front Panel Mount with thru Mounting Holes
RFP52-**	Environmental, Rear Panel Mount with thru Mounting Holes
LPGF52-***(48)	Metal Backshell and Internal/Female threads for PG48 Fitting
LPGF52-***(48)	Metal Backshell and Internal/Male threads for PG48 Fitting
LCFG52-***(28C)	Rubber Cover Backshell with Cable Clamp Size 28C
LCFG52-***(32C)	Rubber Cover Backshell with Cable Clamp Size 32C
AMPL52-***(50)	Rubber Cover Backshell and Cable Clamp 50-57.5mm
AMPL52-***(62)	Rubber Cover Backshell and Cable Clamp 62-65mm
NM52-***	Rubber Cover Backshell for Rubber Conduit
LPGFG-***(48)	Rubber Cover Backshell and Internal/Female Threads for PG48 Fitting
LPGMG-***(48)	Rubber Cover Backshell and Internal/Male Threads for PG48 Fitting
CF52-***(28C)	Metal Backshell and Cable Clamp Size 28C
CFR52-***(50)	Metal Backshell and Cable Clamp 50-57.5mm

SHELL SIZE 52 TRANSIT CONNECTORS

GENERAL INFORMATION

DESCRIPTION	SIZE 52	STANDARD
Number of keyways	5	1
Rubber covered coupling nut on plugs	Standard	Optional
Rubber covered backshells	Optional	Optional
Number of shell sizes	1	14
Grounding spring on plug	Optional	Optional
Halogen-free insert material	Standard	Optional

ELECTRICAL DATA

CONTACT RATING

Contact size AWG	Max current *	Rated and tests current	Maximum voltage drop (Millivolt) *
16	22 A	13 A	74 mV
12	41 A	23 A	63 mV
8	73 A	46 A	65 mV
4	135A	80 A	58 mV
0	245A	130 A	53 mV
4/0	350 A	225 A	53 mV

= Applicable for short time
* According to MIL-DTL-39029 D. Test with nickel-plated wire.

INSERT ARRANGEMENT SERVICE RATING

Service rating	Operating voltage DC (at sea level)	Operating voltage AC (at sea level)
I	250 V	200 V
A	700 V	500 V
D	1,250 V	900 V
E	1,750 V	1,250 V
B	2,450 V	1,750 V
C	4,200 V	3,000 V

DIELECTRIC STRENGTH (STANDARD SEA LEVEL CONDITIONS)

Service rating	Maximum flashover ac rms	Test Voltage ac rms
I	1,400 V	1,000 V
A	2,800 V	2,000 V
D	3,500 V	2,800 V
E	4,500 V	3,500 V
B	5,700 V	4,500 V
C	5,500 V	7,000 V

SPACECRAFT COMPONENTS CORP.
3040 Clayton Street
North Las Vegas, NV 89032
Phone: 702.851.7600
Fax: 702.851.7620
Email: salesinfo@spacecraft.com
Web: www.spacecraft.com

SCPBH020R52XXX

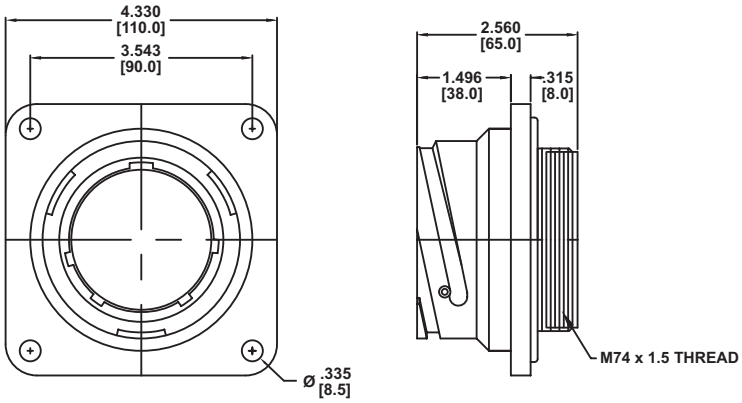

SCPBH030FP52XXX

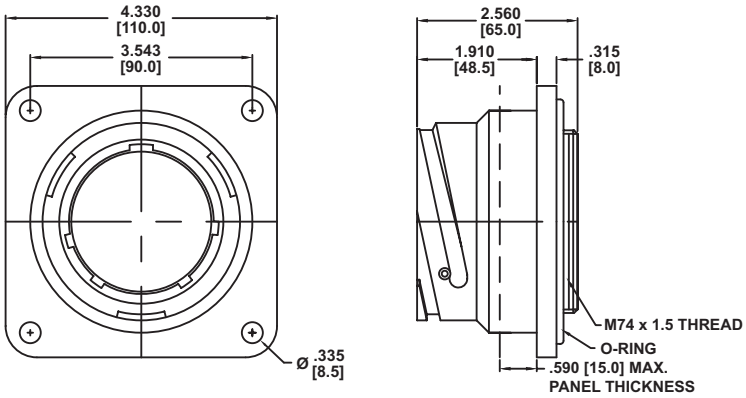

SCPBH01LPGM52XXX(48)

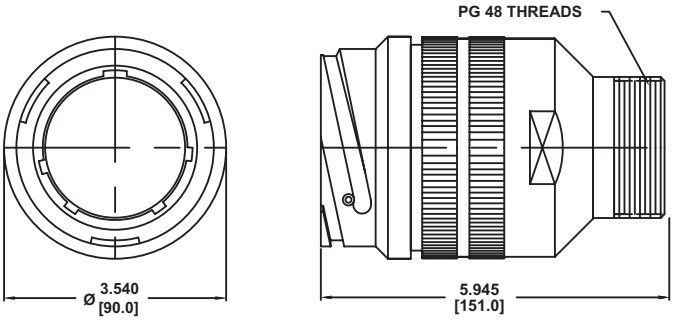

SHELL SIZE 52 TRANSIT CONNECTORS

SCPBH01LPGF52XXX(48)

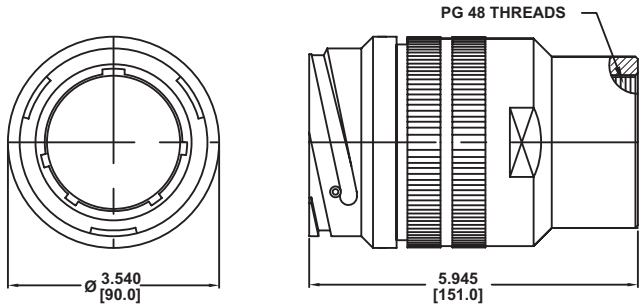

SCPBH06LPGM52XXX(48)

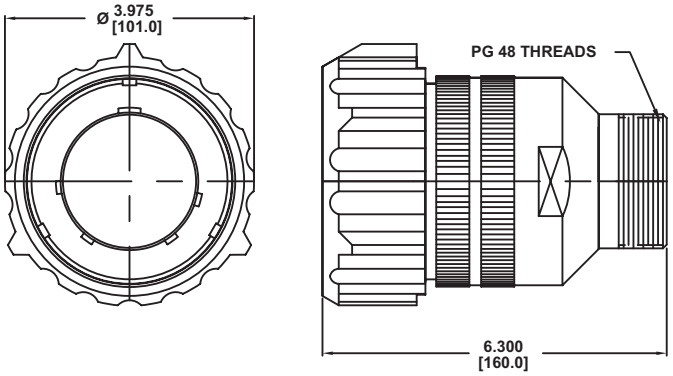

SCPBH06LPGF52XXX(48)

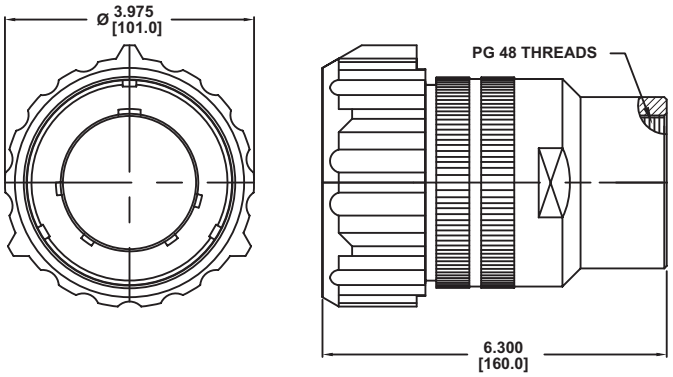

SPACECRAFT COMPONENTS CORP.
3040 Clayton Street
North Las Vegas, NV 89032
Phone: 702.851.7600
Fax: 702.851.7620
Email: salesinfo@spacecraft.com
Web: www.spacecraft.com

SCPBH06LPGMG52XXX(48)

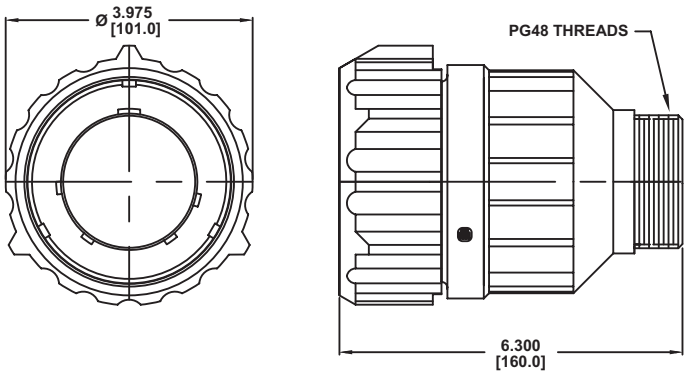

SCPBH06LPGFG52XXX(48)

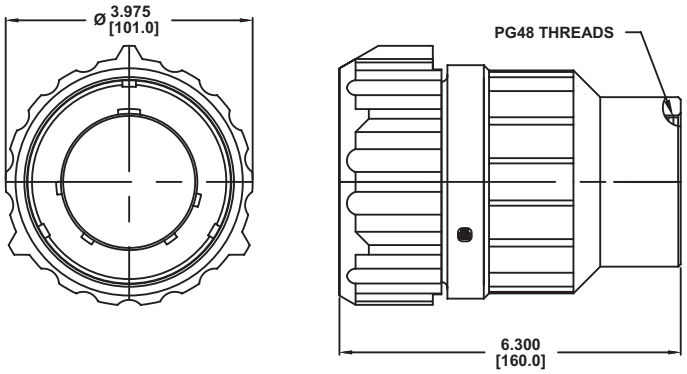

SCPBH06LCFG52

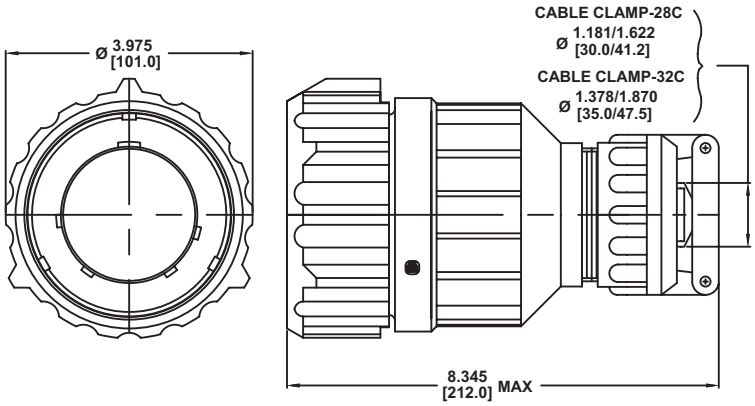

SHELL SIZE 52 TRANSIT CONNECTORS

SCPBH06AMPL52XXX

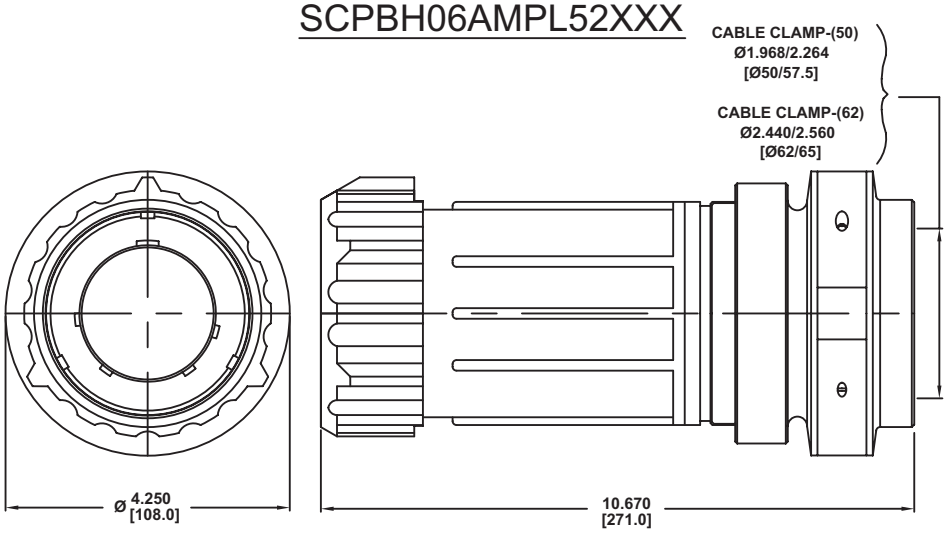

SCPBH06NM52XXX

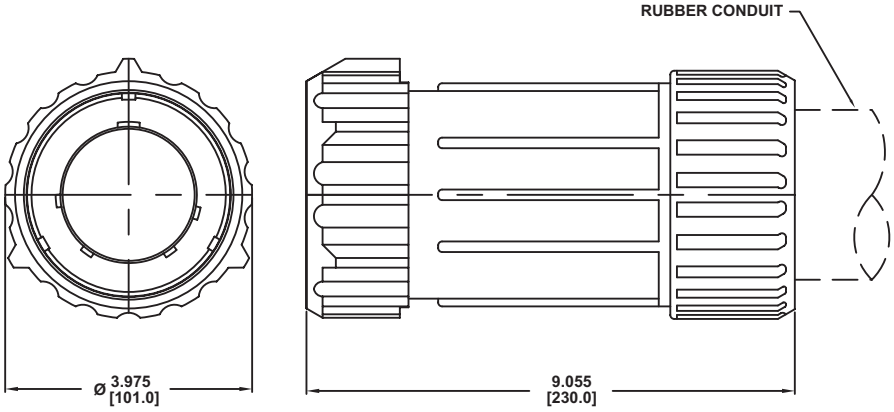

SCPBH064PP52XXX

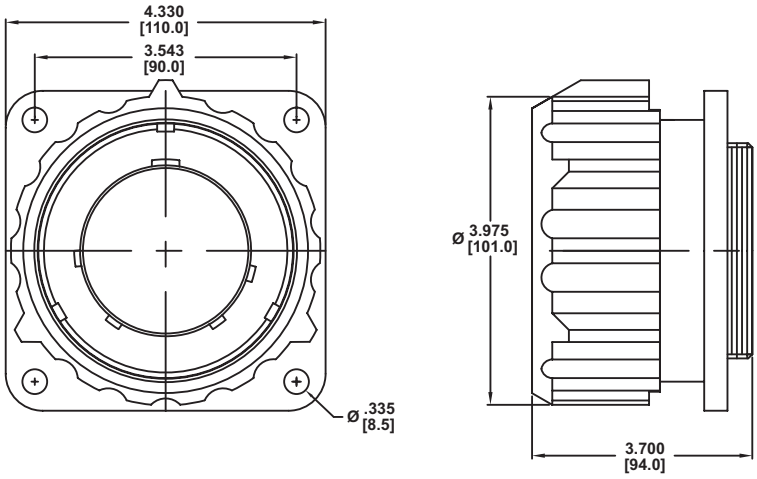

SPACECRAFT COMPONENTS CORP.
3040 Clayton Street
North Las Vegas, NV 89032
Phone: 702.851.7600
Fax: 702.851.7620
Email: salesinfo@spacecraft.com
Web: www.spacecraft.com

SCPBH08CF52XXX(28C)

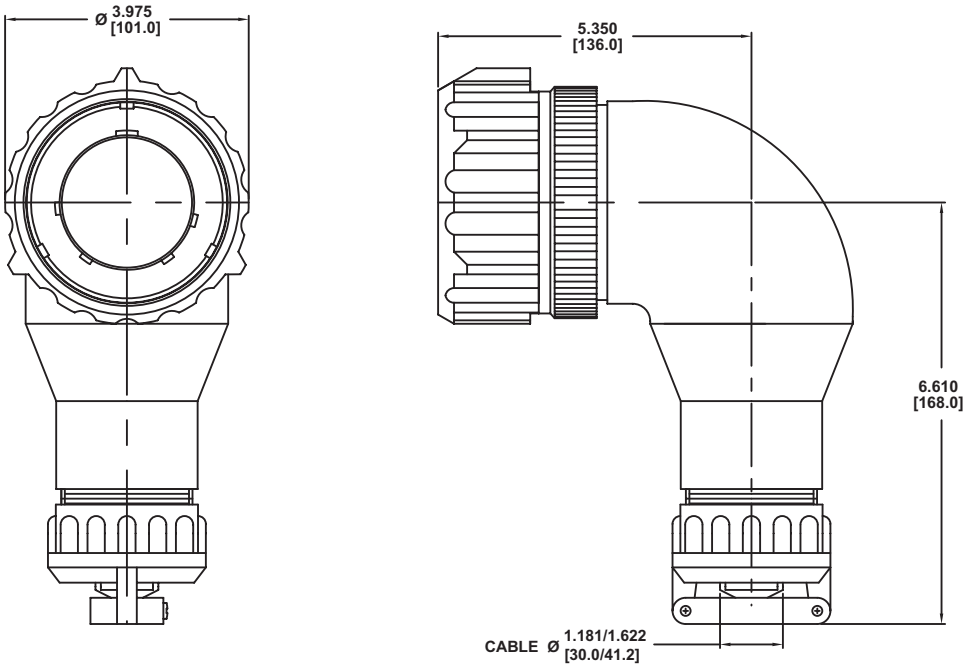

SCPBH09CF52XXX

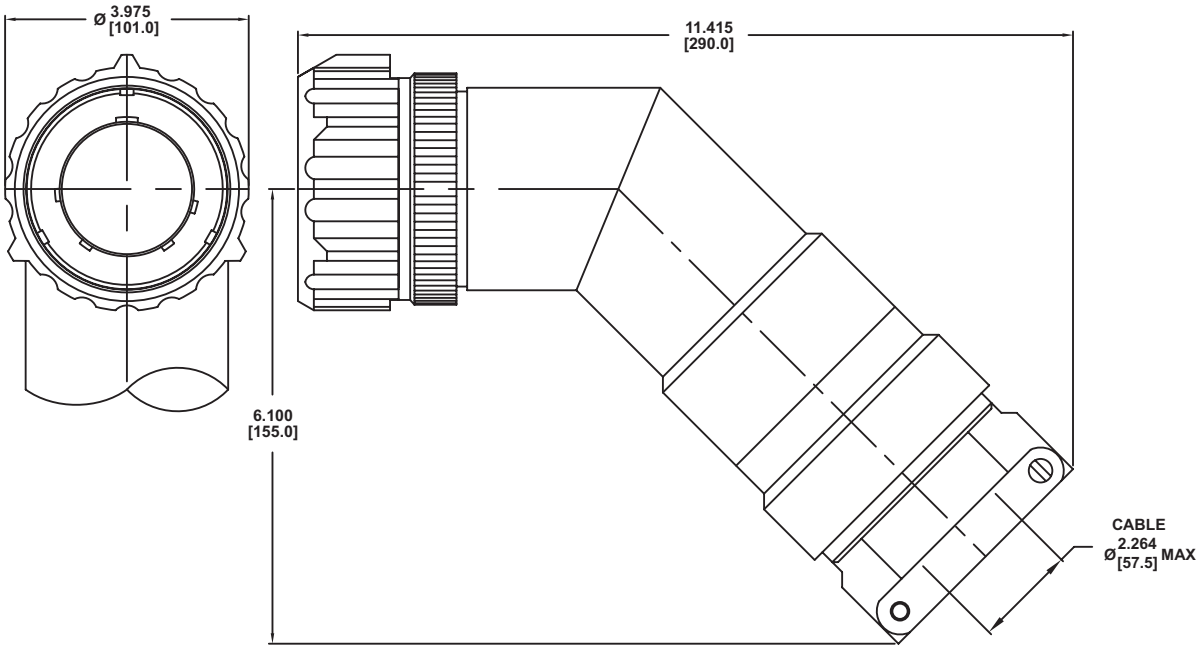

SHELL SIZE 52 TRANSIT CONNECTORS

SCPB52TFM

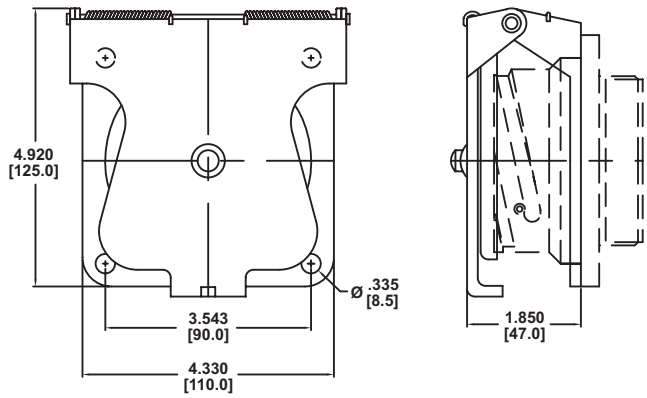

SCPB05-52

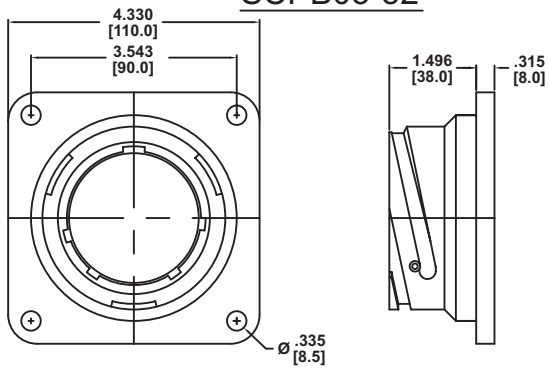

SCPB52TF

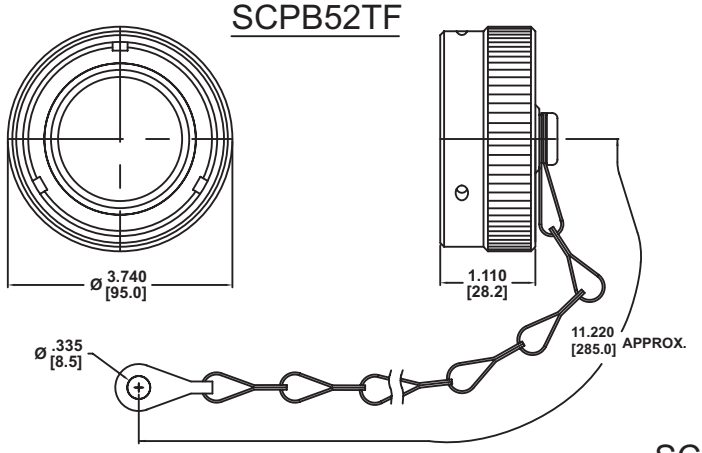

SCPB52TV

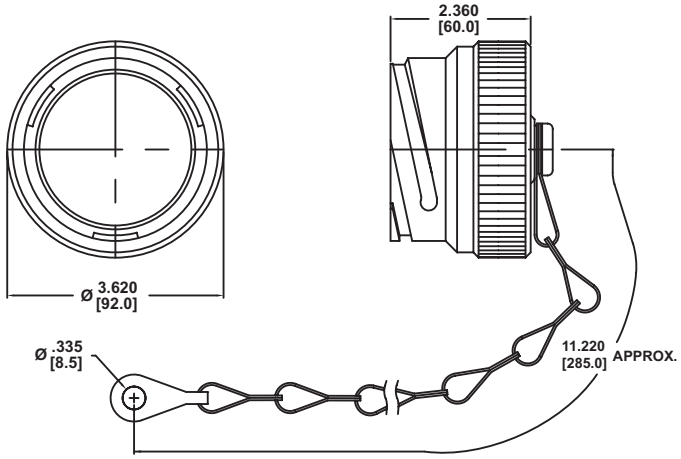

SPACECRAFT COMPONENTS CORP.
3040 Clayton Street
North Las Vegas, NV 89032
Phone: 702.851.7600
Fax: 702.851.7620
Email: salesinfo@spacecraft.com
Web: www.spacecraft.com

INSERT NUMBER	CONTACTS							ALTERNATE POSITIONS (Degree)				REMARKS
	TOTAL	SIZE										
		16	12	8	4	1/0	4/0	W	X	Y	Z	
52-3	3	-	-	-	-	-	3	-	-	-	-	
52-4	4	-	-	-	-	-	-	-	-	-	-	Special Contacts
52-6	6	-	3	-	-	-	3	-	-	-	-	
52-9	9	-	3	-	-	6	-	-	-	-	-	
52-12	12	-	-	5	-	7	-	-	-	-	-	
52-14	14	-	10	-	-	4	-	-	-	-	-	
52-42	42	-	42	-	-	-	-	-	-	-	-	
52-47	47	36	4	5	2	-	-	-	-	-	-	
52-49	49	-	44	-	5	-	-	-	-	-	-	
52-58	58	-	57	1	-	-	-	80	110	250	280	
52-66	66	-	66	-	-	-	-	-	-	-	-	
52-74	74	74	-	-	-	-	-	-	-	-	-	
52-101	101	101	-	-	-	-	-	-	-	-	-	

3 CONTACTS

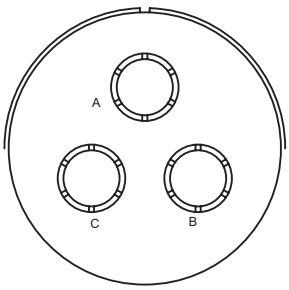

4 CONTACTS

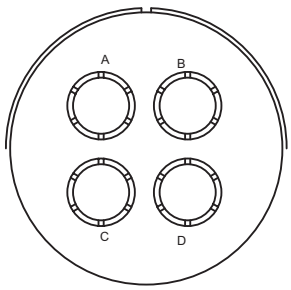

6 CONTACTS

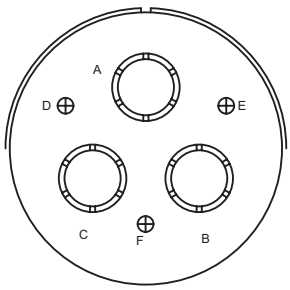

	3 CONTACTS	4 CONTACTS	6 CONTACTS
Insert Arrangement	52-3	52-4	52-6
Number of Contacts	3	4	6
Contact Size	4/0	SPECIAL	3-4/0; 3-12
Service Rating	B	D	B

9 CONTACTS

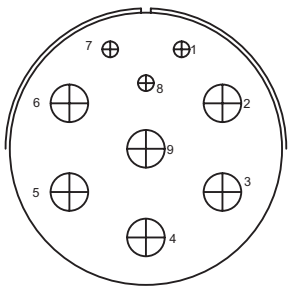

12 CONTACTS

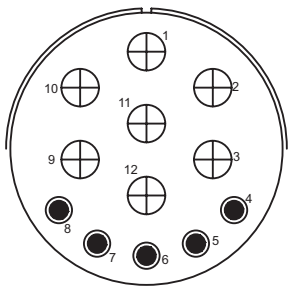

14 CONTACTS

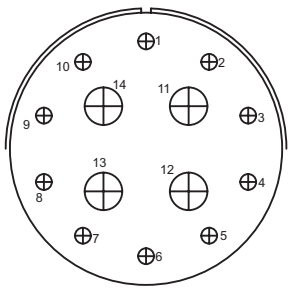

	9 CONTACTS	12 CONTACTS	14 CONTACTS
Insert Arrangement	52-9	52-12	52-14
Number of Contacts	9	12	14
Contact Size	6-0; 3-12	7-0; 5-8	4-0; 10-12
Service Rating	D	A	D

Contact Legend:	○	⊕	●	◯	⊕	◯
Consult Factory	16	12	8	4	0	4/0

Continued on Next Page

SHELL SIZE 52 TRANSIT CONNECTORS

Continued from Previous Page

42 CONTACTS

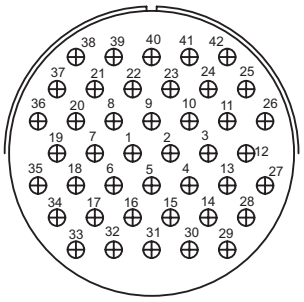

47 CONTACTS

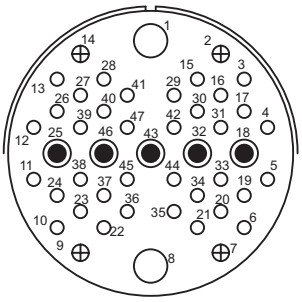

49 CONTACTS

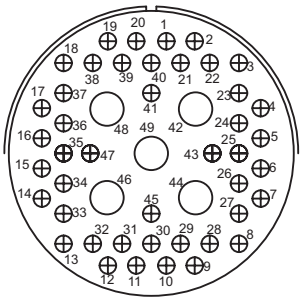

	42 CONTACTS	47 CONTACTS	49 CONTACTS
Insert Arrangement	52-42	52-47	52-49
Number of Contacts	42	47	49
Contact Size	12	2-4; 5-8; 4-12; 36-16	5-4; 44-12
Service Rating	D	D	A

58 CONTACTS

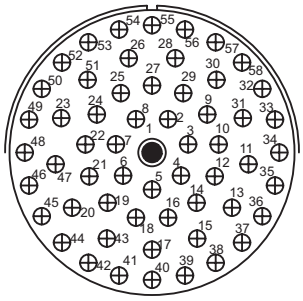

66 CONTACTS

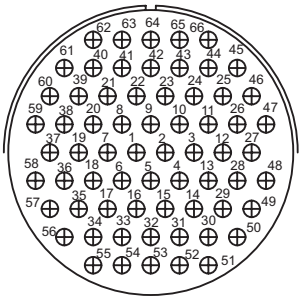

74 CONTACTS

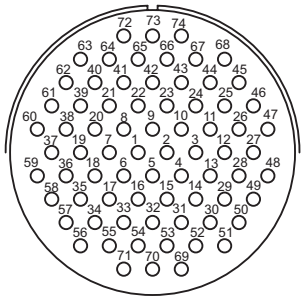

	58 CONTACTS	66 CONTACTS	74 CONTACTS
Insert Arrangement	52-58	52-66	52-74
Number of Contacts	58	66	74
Contact Size	1-8; 57-12	12	16
Service Rating	A	A	A

101 CONTACTS

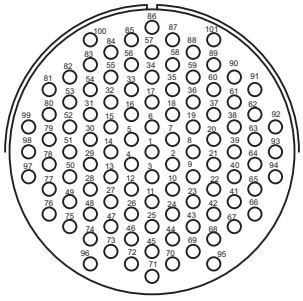

	101 CONTACTS
Insert Arrangement	52-101
Number of Contacts	101
Contact Size	16
Service Rating	A

Contact Legend:	○	⊕	●	◯	⊕	◯
Consult Factory	16	12	8	4	0	4/0

SPACECRAFT COMPONENTS CORP.
3040 Clayton Street
North Las Vegas, NV 89032
Phone: 702.851.7600
Fax: 702.851.7620
Email: salesinfo@spacecraft.com
Web: www.spacecraft.com

SECTION 2C
SCPB SERIES
CONNECTOR ACCESSORY QUICK REFERENCE

(FOR COMPLETE DETAILS ON THESE PARTS SEE **SPACECRAFT CATALOG 401**)

ACCESSORY	SOLDER or F80 CRIMP
BACKSHELLS, ENVIRONMENTAL	
STRAIGHT - CABLE SEALING GLAND	B002*AB
STRAIGHT - FOR ANAMET CONDUIT	B031A*AB
STRAIGHT - FOR PG ADAPTER	B033A*AB
STRAIGHT - FOR PIPE THREAD (PT) ADAPTERS	B035A*AB
STRAIGHT - FOR SEALTITE™ LIQUIDTITE CONDUIT	B037A*AB
45° - CABLE SEALING GLAND	B002CC-AB
90° - CABLE SEALING GLAND	B002D-AB
BACKSHELLS, ENVIRONMENTAL EMI/RFI	
STRAIGHT - CONE TYPE	B004*AB
STRAIGHT - INVERTED CONE	B015*AB
STRAIGHT - 2 RING	B023*AB
STRAIGHT - LIGHTWEIGHT	B043*AB
45° - CONE TYPE	B004CC-AB
45° - INVERTED CONE TYPE	B005CC-AB
45° - 2 RING TYPE	B023CC-AB
45° - LIGHTWEIGHT	B043CC-AB
90° - CONE TYPE	B004D-AB
90° - INVERTED CONE TYPE	B015D-AB
90° - 2 RING TYPE	B023D-AB
90° - LIGHTWEIGHT	B043D-AB
BACKSHELLS, NON-ENVIRONMENTAL	
STRAIGHT	B001A-AB
	B001B-AB
45°	B001CC-AB
90°	B001D-AB

* Additional alpha-numerics are requiered to complete part number.

ACCESSORY	SOLDER or F80 CRIMP
BACKSHELLS, NON-ENVIRONMENTAL EMI/RFI	
STRAIGHT - CONE TYPE	B003*AB
STRAIGHT - INVERTED CONE TYPE	B014*AB
STRAIGHT - LIGHTWEIGHT	B043*AB
45° - CONE TYPE	B003CC-AB
45° - INVERTED CONE TYPE	B014CC-AB
45° - LIGHTWEIGHT	B042CC-AB
90° - CONE TYPE	B003D-AB
90° - INVERTED CONE TYPE	B014D-AB
90° - LIGHTWEIGHT	B043D-AB
BACKSHELLS, POTTING BOOTS & RINGS	
	NOTE 1
BACKSHELLS, SHIELD TERMINATIONS	
STRAIGHT - CRIMP RING - FOR SHRINK BOOT	B005*AB
STRAIGHT - CRIMP RING TYPE	B007*AB
45° - CRIMP RING - FOR SHRINK BOOT	B005CC*AB
45° - CRIMP RING TYPE	B007CC*AB
90° - CRIMP RING - FOR SHRINK BOOT	B005D*AB
90° - CRIMP RING TYPE	B007D*AB
SHIELD CRIMP RING	B049AF26-2
BACKSHELLS, SHORTING CANS	
	B012*AB
	B013*AB
BACKSHELLS, SHRINK BOOT ADAPTERS	
STRAIGHT BOOT ADAPTER	B006A*AB
	B006B*AB

NOTE 1 Contact Sales Department for part numbers and availability.

CONTINUED ON NEXT PAGE

CONTINUED FROM PREVIOUS PAGE

ACCESSORY	SOLDER or F80 CRIMP
BACKSHELLS, STRAIN RELIEF/CABLE CLAMPS	
STRAIGHT - CABLE CLAMP	MS3057-*A
	MS3057-*B
	MS3057-*C
DUMMY RECEPTACLES	
	DRP19
	SCPB05-*
DUST CAPS	
METAL, FOR PLUG	DCP19
	SCPB*TV
METAL, FOR RECEPTACLE	DCR19
	SCPB*TF
GASKET FOR FLANGE MOUNT RECEPTACLES	
ENVIRONMENTAL - EMI/RFI	M83528/004
ENVIRONMENTAL	MS51007-*
	MS52000-*
JAM NUTS	
	SC3186-*
MOUNTING PLATES	
	B049AF94
	B049AF95
	B049AF96
RUBBER BUSHINGS	
	MS3420-*
	MS3420-*A
SEALING PLUGS	
	MS25251
	M527488

NOTE 1 Contact Sales Department for part numbers and availability.

SPACECRAFT COMPONENTS CORP.
3040 Clayton Street
North Las Vegas, NV 89032
Phone: 702.851.7600
Fax: 702.851.7620
Email: salesinfo@spacecraft.com
Web: www.spacecraft.com

SECTION 3C
AS50151
SPECIAL FEATURES
TECHNICAL DATA
CONTACTS & TOOLS

SPECIAL FEATURES

Spacecraft can supply connectors with:

1. Plugs with a self-locking coupling nut, which eliminates the need for safety wire. A low-cost coupling mechanism is available for all series.
2. Our connectors can provide superior EMI/RFI shielding by:
   A. Providing full accessory teeth at the rear of the connector shell, thus minimizing "leakage".
   B. To further enhance performance, plugs can be supplied with grounding fingers around the outside of the barrel.
   C. Receptacles can be supplied with an internal grounding spring.
3. Shells/hardware can be provided in a high impact/strength aluminum as well as carbon steel, 300 series stainless and naval brass.
4. A wide range of finishes are available:
   A. Anodize - both hard and soft.
   B. Cadmium to pass 48, 96, 500 or 1000 hours salt spray.
   C. Electroless nickel.
   D. Zinc Boron.
   E. Black zinc.
5. Standard insert material is neoprene, but can be provided in fuel-resistant Viton or halogen-free neoprene.
6. Various backshell configurations are available for environmental and non-environmental applications together with EMI/RFI protection. See our Catalog 401 for details.

TABLE I. CONTACT ARRANGEMENT SERVICE RATING

MS SERVICE RATING	RECOMMENDED OPERATING VOLTAGE* AT SEA LEVEL		EFFECTIVE CREEPAGE DISTANCE NOM.	MECHANICAL SPACING NOM.
	DC	AC (RMS)		
INST.	250	200	1/16	
A	700	500	1/8	1/16
D	1250	900	3/16	1/8
E	1750	1250	1/4	3/16
B	2450	1750	5/16	1/4
C	4200	3000	1	5/16

ELECTRICAL SERVICE DATA

Test current ratings of contacts and allowable voltage drop under test conditions when assembled as in service are shown below. Maximum total current to be carried per connector is the same as the allowable in wire bundles as specified in MIL-W-5088.

ALTITUDE VOLTAGE DERATING** CHART

MS SERVICE RATING	NOMINAL DISTANCE		STANDARD SEA LEVEL CONDITIONS		PRESSURE ALTITUDE† 50,000 FEET		PRESSURE ALTITUDE† 70,000 FEET	
	AIRSPACE	CREEPAGE	MINIMUM FLASHOVER VOLTAGE AC (RMS)	TEST VOLTAGE AC (RMS)	MINIMUM FLASHOVER VOLTAGE AC (RMS)	TEST VOLTAGE AC (RMS)	MINIMUM FLASHOVER VOLTAGE AC (RMS)	TEST VOLTAGE AC (RMS)
INST.	1/32	1/16	1400	1000	550	400	325	260
A	1/16	1/8	2800	2000	800	600	450	360
D	1/8	3/16	3600	2800	900	675	500	400
E	3/16	1/4	4500	3500	1000	750	550	440
B	1/4	5/16	5700	4500	1100	825	600	480
C	5/16	1	8500	7000	1300	975	700	560

† Not corrected for changes in density due to variations in temperature.
** No attempt has been made to recommend operating voltages. The designer must determine his own operating voltage by the application of a safety factor to the above derating chart to compensate for circuit transients, surges, etc.

CONTACT RATINGS

CONTACT SIZE	WIRE SIZE	RATED CURRENT	POTENTIAL DROP	MAX CURRENT
20	20	7.5A	83 mV	7.5A
18	18	7.5	83 mV	10A
16 & 16S	16 AWG	13 A	49 mV	22A
12	12 AWG	23 A	42 mV	41A
8	8 AWG	46 A	26 mV	73A
4	4 AWG	80 A	23 mV	135A
0	0 AWG	150 A	21 mV	245A
4/0	4/0	225A	53 mV	350A

SPACECRAFT COMPONENTS CORP.
3040 Clayton Street
North Las Vegas, NV 89032
Phone: 702.851.7600
Fax: 702.851.7620
Email: salesinfo@spacecraft.com
Web: www.spacecraft.com

SOLDER CONTACT CURRENT RATINGS*

MATING END SIZE	WIRE BARREL SIZE	ALLOWABLE WIRE SIZE	TEST CURRENT** AMPS
16/16S	16	16 18 20 22	13 10 7.5 5
12	12	12 14	23 17
8	8	8 10	46 33
4	4	4 6	80 60
0	0	0 1 2	150 125 100

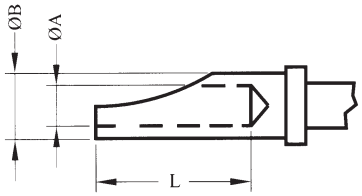

SOLDER CUP DIMENSIONS

CONTACT SIZE	A MIN	B	L
16	.069 [1.75]	.096/.116 [2.43/2.94]	.250/.313 [6.35/7.95]
12	.112 [2.84]	.130/.150 [3.30/3.81]	.375/.438 [9.52/11.12]
8	.205 [5.20]	.243/.259 [6.17/6.57]	.500/.563 [12.70/14.30]
4	.328 (8.33]	.370/.397 [9.39/10.08]	.625/.688 [15.87/17.47]
0	.464 [11.78]	.510/.550 [12.95/13.97]	.625/.688 [15.87/17.47]

Dimensions are in Inches [mm]

TABLE II. WIRE RANGE ACCOMMODATIONS

CONTACT SIZE	WIRE SIZE	OD OF FINISHED WIRE (INCH)					
		SOLDER CONTACT CONNECTORS		CRIMP CONTACT CONNECTORS			
				FRONT RELEASE		REAR RELEASE	
		MIN	MAX	MIN	MAX	MIN	MAX
16-16	20 18 16	.064 [1.63]	.130 [3.30]	0.66 [1.68]	.130 [3.30]	.053 [1.35]	.103 [2.62]
12-12	14 12	.114 [2.90]	.170 [4.32]	.097 [2.46]	.170 [4.32]	.085 [2.16]	.158 [4.01]
8-8	10 8	.164 [4.17]	.255 [6.48]	.132 [3.35]	.255 [6.48]	.132 [3.35]	.255 [6.48]
4-4	6 4	.272 [6.91]	.370 [9.40]	.237 [6.02]	.370 [9.40]	.237 [6.02]	.370 [9.40]
0-0	2 0	.415 [10.54]	.550 [13.97]	.360 [9.14]	.550 [13.97]	.360 [9.14]	.550 [13.97]

Dimensions are in Inches [mm]

* Solder Wells Filled

** Contact ratings as stated are test ratings only. The connector could not withstand full rated current through all contacts continuously. Please note that the electrical data given is not an establishment of electrical safety factors. This is left entirely in the designer's hands as he can best determine which peak voltage, switching surges, transients, etc, can be expected in a particular circuit.

AS50151 SERIES I – SOLDER CONTACTS

SIZE	PIN	PIN FILLED SOLDER CUP (Note 1)	SOCKET (Note 1)	SOCKET FILLED SOLDER CUP (Note 1)	MATERIAL	FINISH	COLOR CODE
16S	P12-5100-310	P12-5100-315	S12-5100-610	S12-5100-615	Note 2	Silver	–
16S	P12-5100-000	–	S12-5100-000	–	Alumel	None	Green
16S	P12-5100-010	–	S12-5100-010	–	Chromel	None	White
16S	P12-5100-020	–	S12-5100-020	–	Constantan	None	Black
16S	P12-5100-040	–	S12-5100-040	–	Iron	Cadmium	Yellow
16	P12-3800-310	P12-3800-315	S12-3800-610	S12-3800-615	Note 2	Silver	–
16	P12-3800-000	–	S12-3800-000	–	Alumel	None	Green
16	P12-3800-010	–	S12-3800-010	–	Chomel	None	White
16	P12-3800-020	–	S12-3800-020	–	Constantan	None	Black
16	P12-3800-040	–	S12-3800-040	–	Iron	Cadmium	Yellow
12	P12-6500-310	P12-6500-315	S12-6500-610	S12-6500-615	Note 2	Silver	–
12	P12-6500-000	–	S12-6500-000	–	Alumel	None	Green
12	P12-6500-010	–	S12-6500-010	–	Chromel	None	White
12	P12-6500-020	–	S12-6500-020	–	Constantan	None	Black
12	P12-6500-040	–	S12-6500-040	–	Iron	Cadmium	Yellow
8	P12-7900-310	P12-7900-315	S12-7900-510	S12-7900-515	Note 2	Silver	–
4	P12-8500-310	P12-8500-315	S12-8500-510	S12-8500-515	Note 2	Silver	–
1/0	P12-9200-310	P12-9200-315	S12-9200-510	S12-9200-515	Note 2	Silver	–

Note 1: Only MS3100 thru MS3108 and MS25183 connectors are supplied with solder filled cups
Note 2: Pins are brass; Sockets are copper.

AS50151

PIN **F80** CRIMP CONTACTS

ORDERING INFORMATION

R12 - 36 15 - 140

SERIES PREFIX
R12 AS50151 crimp F80 pin contact.

CONTACT SIZE

CODE	25	36	49	64	79	85	92	97
SIZE	18	16	16S	12	8	4	1/0	4/0

WIRE RANGE
See Table below.

MODIFICATION
Consult Sales Department.

MATERIAL/FINISH
000 Alumel/none.
010 Chromel/none.
020 Constantan/none.
040 Iron/cadmium.
110 Copper/silver.
140 Copper/gold. 0.000010.
142 Copper/gold 0.000030.

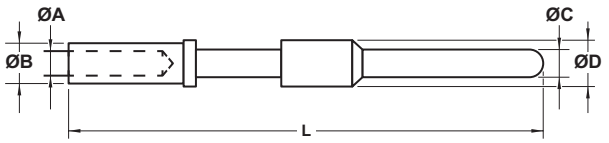

PART NUMBER	SIZE	MATERIAL	FINISH	FOR WIRE SIZE		A	B	C	D	L
				AWG	MM ²					
R12-2500-110	18	Copper	Silver	20-26	0.60-0.15	.052 [1.30]	.076 [1.93]	.055 [1.46]	0.95 [2.40]	1.165 [29.61]
R12-3632-110	16	Copper	Silver	28-32	–	.018 [0.45]	.077 [1.95]	.062 [1.58]	.126 [3.20]	1.250 [31.75]
R12-3608-110	16	Copper	Silver	24-26	0.20-0.15	.034 [.085]	.061 [1.55]	.062 [1.58]	.126 [3.20]	1.250 [31.75]
R12-3613-110	16	Copper	Silver	20-26	0.60-0.15	.052 [1.30]	.076 [1.93]	.062 [1.58]	.126 [3.20]	1.250 [31.75]
R12-3612-110	16	Copper	Silver	20	0.60	.048 [1.20]	.102 [2.60]	.062 [1.58]	.126 [3.20]	1.250 [31.75]
R12-3615-110	16	Copper	Silver	18-20	1.0	.060 [1.50]	.102 [2.60]	.062 [1.58]	.126 [3.20]	1.250 [31.75]
R12-3600-110	16	Copper	Silver	16-18	1.5-1.0	.067 [1.70]	.102 [2.60]	.062 [1.58]	.126 [3.20]	1.250 [31.75]
R12-3600-000	16	Alumel	None	16	1.5-1.0	.067 [1.70]	.102 [2.60]	.062 [1.58]	.126 [3.20]	1.250 [31.75]
R12-3600-010	16	Chromel	None	16	1.5-1.0	.067 [1.70]	.102 [2.60]	.062 [1.58]	.126 [3.20]	1.250 [31.75]
R12-3600-020	16	Constantan	None	16	1.5-1.0	.067 [1.70]	.102 [2.60]	.062 [1.58]	.126 [3.20]	1.250 [31.75]
R12-3600-040	16	Iron	Cadmium	16	1.5-1.0	.067 [1.70]	.102 [2.60]	.062 [1.58]	.126 [3.20]	1.250 [31.75]
R12-3620-110	16	Copper	Silver	14	2.0	.078 [2.00]	.115 [2.90]	.062 [1.58]	.126 [3.20]	1.250 [31.75]
R12-3626-110	16	Copper	Silver	12	3.0	.099 [2.50]	.150 [3.80]	.062 [1.58]	.126 [3.20]	1.250 [31.75]
R12-4913-110	16S	Copper	Silver	20-26	0.60-0.15	.052 [1.30]	.076 [1.93]	.062 [1.58]	.126 [3.20]	1.050 [26.65]
R12-4912-110	16S	Copper	Silver	20	0.60	.048 [1.20]	.102 [2.60]	.062 [1.58]	.126 [3.20]	1.050 [26.65]
R12-4915-110	16S	Copper	Silver	18	1.0	.060 [1.50]	.102 [2.60]	.062 [1.58]	.126 [3.20]	1.050 [26.65]
R12-4900-110	16S	Copper	Silver	16-18	1.5	.067 [1.70]	.102 [2.60]	.062 [1.58]	.126 [3.20]	1.050 [26.65]
R12-4900-000	16S	Alumel	None	16	1.5	.067 [1.70]	.102 [2.60]	.062 [1.58]	.126 [3.20]	1.050 [26.65]
R12-4900-010	16S	Chromel	None	16	1.5	.067 [1.70]	.102 [2.60]	.062 [1.58]	.126 [3.20]	1.050 [26.65]
R12-4900-020	16S	Constantan	None	16	1.5	.067 [1.70]	.102 [2.60]	.062 [1.58]	.126 [3.20]	1.050 [26.65]
R12-4900-040	16S	Iron	Cadmium	16	1.5	.067 [1.70]	.102 [2.60]	.062 [1.58]	.126 [3.20]	1.050 [26.65]
R12-4920-110	16S	Copper	Silver	14	2.0	.078 [2.00]	.115 [2.90]	.062 [1.58]	.126 [3.20]	1.050 [26.65]
R12-4926-110	16S	Copper	Silver	12	3.0	.099 [2.50]	.150 [3.80]	.062 [1.58]	.126 [3.20]	1.050 [26.65]

Dimensions are in Inches [mm]

SPACECRAFT COMPONENTS CORP.
3040 Clayton Street
North Las Vegas, NV 89032
Phone: 702.851.7600
Fax: 702.851.7620
Email: salesinfo@spacecraft.com
Web: www.spacecraft.com

PIN **F80** CRIMP CONTACTS

PART NUMBER	SIZE	MATERIAL	FINISH	FOR WIRE SIZE		A	B	C	D	L
				AWG	MM ²					
R12-6412-110	12	Copper	Silver	20	0.60	.048 [1.20]	.102 [2.60]	.093 [2.38]	.189 [4.80]	1.480 [37.65]
R12-6415-110	12	Copper	Silver	18	1.0	.060 [1.50]	.134 [3.40]	.093 [2.38]	.189 [4.80]	1.480 [37.65]
R12-6420-110	12	Copper	Silver	14-18	2.0-1.0	.078 [2.00]	1.50 [3.80]	.093 [2.38]	.189 [4.80]	1.480 [37.65]
R12-6422-110	12	Copper	Silver	–	2.5	.087 [2.20]	.150 [3.80]	.093 [2.38]	.189 [4.80]	1.480 [37.65]
R12-6400-110	12	Copper	Silver	12	3.0	.099 [2.50]	.154 [3.90]	.093 [2.38]	.189 [4.80]	1.480 [37.65]
R12-6400-000	12	Alumel	None	12	3.0	.099 [2.50]	.154 [3.90]	.093 [2.38]	.189 [4.80]	1.480 [37.65]
R12-6400-010	12	Chromel	None	12	3.0	.099 [2.50]	.154 [3.90]	.093 [2.38]	.189 [4.80]	1.480 [37.65]
R12-6400-020	12	Constantan	None	12	3.0	.099 [2.50]	.154 [3.90]	.093 [2.38]	.189 [4.80]	1.480 [37.65]
R12-6400-040	12	Iron	Cadmium	12	3.0	.099 [2.50]	.154 [3.90]	.093 [2.38]	.189 [4.80]	1.480 [37.65]
R12-6430-110	12	Copper	Silver	–	4.0	.118 [3.00]	.176 [4.80]	.093 [2.38]	.189 [4.80]	1.480 [37.65]
R12-6431-110	12	Copper	Silver	–	4.0	.130 [3.30]	.166 [4.20]	.093 [2.38]	.189 [4.80]	1.480 [37.65]
R12-6438-110	12	Copper	Silver	10	6.0	.142 [3.60]	.176 [4.80]	.093 [2.38]	.189 [4.80]	1.480 [37.65]
R12-6408-110	12	Copper	Silver	8	9.0	.177 [4.50]	.272 [6.90]	.093 [2.38]	.189 [4.80]	1.480 [37.65]
R12-7915-110	8	Copper	Silver	18	1.0	0.60 [1.50]	.134 [3.40]	.141 [3.59]	.307 [7.80]	1.603 [40.70]
R12-7918-110	8	Copper	Silver	14-18	2.0-1.0	0.71 [1.80]	.150 [3.80]	.141 [3.59]	.307 [7.80]	1.603 [40.70]
R12-7926-110	8	Copper	Silver	12	3.0	.099 [2.50]	.154 [3.90]	.141 [3.59]	.307 [7.80]	1.603 [40.70]
R12-7930-110	8	Copper	Silver	–	4.0	.118 [3.00]	.176 [4.80]	.141 [3.59]	.307 [7.80]	1.603 [40.70]
R12-7900-110	8	Copper	Silver	8	9.0	.177 [4.50]	.272 [6.90]	.141 [3.59]	.307 [7.80]	1.603 [40.70]
R12-7950-110	8	Copper	Silver	–	10.0	.201 [5.00]	.272 [6.90]	.141 [3.59]	.307 [7.80]	1.603 [40.70]
R12-7958-110	8	Copper	Silver	6	13.2	.229 [5.80]	.307 [7.80]	.141 [3.59]	.307 [7.80]	1.603 [40.70]
R12-8522-110	4	Copper	Silver	–	2.5	.087 [2.20]	.150 [3.80]	.225 [5.70]	.433 [11.00]	1.625 [41.25]
R12-8526-110	4	Copper	Silver	12	3.0	.099 [2.50]	.150 [3.80]	.225 [5.70]	.433 [11.00]	1.625 [41.25]
R12-8530-110	4	Copper	Silver	–	4.0	.118 [3.00]	.189 [4.80]	.225 [5.70]	.433 [11.00]	1.625 [41.25]
R12-8550-110	4	Copper	Silver	–	10.0	.201 [5.00]	.275 [7.00]	.225 [5.70]	.433 [11.00]	1.625 [41.25]
R12-8562-110	4	Copper	Silver	–	16.0	.244 [6.20]	.374 [9.50]	.225 [5.70]	.433 [11.00]	1.625 [41.25]
R12-8500-110	4	Copper	Silver	4	22.0	.281 [7.10]	.375 [9.53]	.225 [5.70]	.433 [11.00]	1.625 [41.25]
R12-8525-110	4	Copper	Silver	–	25.0	.307 [7.80]	.374 [9.50]	.225 [5.70]	.433 [11.00]	1.625 [41.25]
R12-8535-110	4	Copper	Silver	–	35.0	.354 [9.00]	.565 [14.35]	.225 [5.70]	.433 [11.00]	1.625 [41.25]
R12-9245-110	1/0	Copper	Silver	8	9.0	.177 [4.55]	.268 [6.80]	.356 [9.05]	.595 [15.11]	1.803 [46.50]
R12-9250-110	1/0	Copper	Silver	–	10.0	.201 [5.00]	.275 [7.00]	.356 [9.05]	.595 [15.11]	1.803 [46.50]
R12-9246-110	1/0	Copper	Silver	4	22.0	.281 [7.15]	.375 [9.53]	.356 [9.05]	.595 [15.11]	1.803 [46.50]
R12-9225-110	1/0	Copper	Silver	–	25.0	.307 [7.80]	.374 [9.50]	.356 [9.05]	.595 [15.11]	1.803 [46.50]
R12-9235-110	1/0	Copper	Silver	–	35.0	.354 [9.00]	.565 [14.35]	.356 [9.05]	.595 [15.11]	1.803 [46.50]
R12-9275-110	1/0	Copper	Silver	–	50.0	.421 [10.70]	.565 [14.35]	.356 [9.05]	.595 [15.11]	1.803 [46.50]
R12-9200-110	1/0	Copper	Silver	1/0	53.0	.453 [11.50]	.565 [14.35]	.356 [9.05]	.595 [15.11]	1.803 [46.50]
R12-9790-110	4/0	Copper	Silver	2	33.5	.354 [9.0]	.565 [14.35]	.500 [12.69]	.787 [20.0]	2.35 [59.7]
R12-97115-110	4/0	Copper	Silver	1/0	53.0	.453 [11.5]	.565 [14.35]	.500 [12.69]	.787 [20.0]	2.33 [59.2]
R12-97135-110	4/0	Copper	Silver	2/0	67.4	.532 [13.5]	.650 [16.5]	.500 [12.69]	.787 [20.0]	2.40 [60.9]
R12-9700-110	4/0	Copper	Silver	4/0	107.0	.650 [16.5]	.787 [20.0]	.500 [12.69]	.787 [20.0]	2.60 [65.9]

Dimensions are in Inches [mm]

AS50151

SOCKET **F80** CRIMP CONTACTS

ORDERING INFORMATION

T12 - 36 15 - 540

SERIES PREFIX
T12 AS50151 crimp F80 socket contact.

CONTACT SIZE

CODE	25	36	49	64	79	80	85	86	92	93	97
SIZE	18	16	16S	12	8	8*	4	4*	1/0	1/0*	4/0*

* Indicates closed entry socket.

WIRE RANGE
See Table below.

MODIFICATION
Consult Sales Department.

MATERIAL/FINISH

000	Alumel/none.	**140**	Copper/gold. 0.000010.
010	Chromel/none.	**142**	Copper/gold 0.000030.
020	Constantan/none.	**510***	Copper/silver.
040	Iron/cadmium.	**540***	Copper/gold. 0.000010.
110	Copper/silver.	**542***	Copper/gold 0.000030.

* Applies only to socket contacts sizes 8, 4, 1/0 and 4/0.

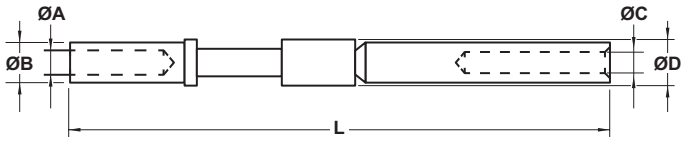

PART NUMBER	SIZE	MATERIAL	FINISH	FOR WIRE SIZE		A	B	C	D	L
				AWG	MM ²					
T12-2500-110	18	Copper	Silver	20-26	0.60-0.15	.052 [1.30]	.076 [1.93]	.056 [1.46]	.095 [2.40]	1.197 [34.4]
T12-3632-110	16	Copper	Silver	28-32	–	.018 [0.45]	.077 [1.95]	.065 [1.65]	.126 [3.20]	1.440 [36.50]
T12-3608-110	16	Copper	Silver	24-26	0.20-0.15	.034 [0.85]	.061 [1.55]	.065 [1.65]	.126 [3.20]	1.440 [36.50]
T12-3613-110	16	Copper	Silver	20-26	0.60-0.15	.052 [1.30]	.076 [1.93]	.065 [1.65]	.126 [3.20]	1.440 [36.50]
T12-3612-110	16	Copper	Silver	20	0.60	.048 [1.20]	.102 [2.60]	.065 [1.65]	.126 [3.20]	1.440 [36.50]
T12-3615-110	16	Copper	Silver	18-20	1.0	.060 [1.50]	.102 [2.60]	.065 [1.65]	.126 [3.20]	1.440 [36.50]
T12-3600-110	16	Copper	Silver	16-18	1.5-1.0	.067 [1.70]	.102 [2.60]	.065 [1.65]	.126 [3.20]	1.440 [36.50]
T12-3600-000	16	Alumel	None	16	1.5	.067 [1.70]	.102 [2.60]	.065 [1.65]	.126 [3.20]	1.440 [36.50]
T12-3600-010	16	Chromel	None	16	1.5	.067 [1.70]	.102 [2.60]	.065 [1.65]	.126 [3.20]	1.440 [36.50]
T12-3600-020	16	Constantan	None	16	1.5	.067 [1.70]	.102 [2.60]	.065 [1.65]	.126 [3.20]	1.440 [36.50]
T12-3600-040	16	Iron	Cadmium	16	1.5	.067 [1.70]	.102 [2.60]	.065 [1.65]	.126 [3.20]	1.440 [36.50]
T12-3620-110	16	Copper	Silver	14	2.0	.078 [2.00]	.115 [2.90]	.065 [1.65]	.126 [3.20]	1.440 [36.50]
T12-3626-110	16	Copper	Silver	12	3.0	.099 [2.50]	.150 [3.80]	.065 [1.65]	.126 [3.20]	1.440 [36.50]
T12-4913-110	16S	Copper	Silver	20-26	0.60-0.15	.052 [1.30]	.076 [1.93]	.065 [1.65]	.126 [3.20]	1.050 [26.65]
T12-4912-110	16S	Copper	Silver	20	0.60	.048 [1.20]	.102 [2.60]	.065 [1.65]	.126 [3.20]	1.050 [26.65]
T12-4915-110	16S	Copper	Silver	18	1.0	.060 [1.50]	.102 [2.60]	.065 [1.65]	.126 [3.20]	1.050 [26.65]
T12-4900-110	16S	Copper	Silver	16-18	1.5-1.0	.067 [1.70]	.102 [2.60]	.065 [1.65]	.126 [3.20]	1.050 [26.65]
T12-4900-000	16S	Alumel	None	16	1.5	.067 [1.70]	.102 [2.60]	.065 [1.65]	.126 [3.20]	1.050 [26.65]
T12-4900-010	16S	Chromel	None	16	1.5	.067 [1.70]	.102 [2.60]	.065 [1.65]	.126 [3.20]	1.050 [26.65]
T12-4900-020	16S	Constantan	None	16	1.5	.067 [1.70]	.102 [2.60]	.065 [1.65]	.126 [3.20]	1.050 [26.65]
T12-4900-040	16S	Iron	Cadmium	16	1.5	.067 [1.70]	.102 [2.60]	.065 [1.65]	.126 [3.20]	1.050 [26.65]
T12-4920-110	16S	Copper	Silver	14	2.0	.078 [2.00]	.115 [2.90]	.065 [1.65]	.126 [3.20]	1.050 [26.65]
T12-4926-110	16S	Copper	Silver	12	3.0	.099 [2.50]	.150 [3.80]	.065 [1.65]	.126 [3.20]	1.050 [26.65]

Dimensions are in Inches [mm]

SPACECRAFT COMPONENTS CORP.
3040 Clayton Street
North Las Vegas, NV 89032
Phone: 702.851.7600
Fax: 702.851.7620
Email: salesinfo@spacecraft.com
Web: www.spacecraft.com

SOCKET **F80** CRIMP CONTACTS

PART NUMBER	SIZE	MATERIAL	FINISH	FOR WIRE SIZE		A	B	C	D	L
				AWG	MM ²					
T12-6412-110	12	Copper	Silver	20	0.60	.048 [1.20]	.102 [2.60]	.098 [2.48]	.189 [4.80]	1.480 [37.65]
T12-6415-110	12	Copper	Silver	18	1.0	.060 [1.50]	.134 [3.40]	.098 [2.48]	.189 [4.80]	1.480 [37.65]
T12-6420-110	12	Copper	Silver	14-18	2.0-1.0	.078 [2.00]	.150 [3.80]	.098 [2.48]	.189 [4.80]	1.480 [37.65]
T12-6422-110	12	Copper	Silver	–	2.5	.087 [2.20]	.150 [3.80]	.098 [2.48]	.189 [4.80]	1.480 [37.65]
T12-6400-000	12	Alumel	None	12	3.0	.099 [2.50]	.154 [3.90]	.098 [2.48]	.189 [4.80]	1.480 [37.65]
T12-6400-010	12	Chromel	None	12	3.0	.099 [2.50]	.154 [3.90]	.098 [2.48]	.189 [4.80]	1.480 [37.65]
T12-6400-020	12	Constantan	None	12	3.0	.099 [2.50]	.154 [3.90]	.098 [2.48]	.189 [4.80]	1.480 [37.65]
T12-6400-040	12	Iron	Cadmium	12	3.0	.099 [2.50]	.154 [3.90]	.098 [2.48]	.189 [4.80]	1.480 [37.65]
T12-6400-110	12	Copper	Silver	12	3.0	.099 [2.50]	.154 [3.90]	.098 [2.48]	.189 [4.80]	1.480 [37.65]
T12-6430-110	12	Copper	Silver	–	4.0	.118 [3.00]	.189 [4.80]	.098 [2.48]	.189 [4.80]	1.480 [37.65]
T12-6431-110	12	Copper	Silver	–	4.0	.130 [3.30]	.166 [4.20]	.098 [2.48]	.189 [4.80]	1.480 [37.65]
T12-6438-110	12	Copper	Silver	10	6.0	.142 [3.60]	.189 [4.80]	.098 [2.48]	.189 [4.80]	1.480 [37.65]
T12-6408-110	12	Copper	Silver	8	9.0	.177 [4.50]	.272 [6.90]	.098 [2.48]	.189 [4.80]	1.480 [37.65]
T12-7915-510	8	Copper	Silver	18	1.0	.060 [1.50]	.134 [3.40]	.147 [3.73]	.307 [7.80]	1.595 [40.50]
T12-7918-510	8	Copper	Silver	14-18	2.0-1.0	.071 [1.80]	.150 [3.80]	.147 [3.73]	.307 [7.80]	1.595 [40.50]
T12-7926-510	8	Copper	Silver	12	3.0	.099 [2.50]	.154 [3.90]	.147 [3.73]	.307 [7.80]	1.595 [40.50]
T12-7930-510	8	Copper	Silver	–	4.0	.118 [8.00]	.176 [4.80]	.147 [3.73]	.307 [7.80]	1.595 [40.50]
T12-7900-510	8	Copper	Silver	8	9.0	.177 [4.50]	.272 [6.90]	.147 [3.73]	.307 [7.80]	1.595 [40.50]
T12-7950-510	8	Copper	Silver	–	10.0	.201 [5.00]	.272 [6.90]	.147 [3.73]	.307 [7.80]	1.595 [40.50]
T12-7958-510	8	Copper	Silver	6	13.2	.229 [5.80]	.307 [7.80]	.147 [3.73]	.307 [7.80]	1.595 [40.50]
T12-8522-510	4	Copper	Silver	–	2.5	.087 [2.20]	.150 [3.80]	.230 [5.84]	.433 [11.00]	1.625 [41.25]
T12-8526-510	4	Copper	Silver	12	3.0	.099 [2.50]	.150 [3.80]	.230 [5.84]	.433 [11.00]	1.625 [41.25]
T12-8530-510	4	Copper	Silver	–	4.0	.118 [3.00]	.189 [4.80]	.230 [5.84]	.433 [11.00]	1.625 [41.25]
T12-8550-510	4	Copper	Silver	–	10.0	.201 [5.00]	.275 [7.00]	.230 [5.84]	.433 [11.00]	1.625 [41.25]
T12-8562-510	4	Copper	Silver	–	16.0	.244 [6.20]	.374 [9.50]	.230 [5.84]	.433 [11.00]	1.625 [41.25]
T12-8500-510	4	Copper	Silver	4	22.0	.281 [7.15]	.375 [9.50]	.230 [5.84]	.433 [11.00]	1.625 [41.25]
T12-8525-510	4	Copper	Silver	–	25.0	.307 [7.80]	.374 [9.50]	.230 [5.84]	.433 [11.00]	1.625 [41.25]
T12-8535-510	4	Copper	Silver	–	35.0	.354 [9.00]	.565 [14.35]	.230 [5.84]	.433 [11.00]	1.625 [41.25]
T12-9245-510	1/0	Copper	Silver	8	9.0	.177 [4.55]	.268 [6.80]	.365 [9.20]	.595 [15.11]	1.830 [46.50]
T12-9250-510	1/0	Copper	Silver	–	10.0	.201 [5.00]	.275 [7.00]	.365 [9.20]	.595 [15.11]	1.830 [46.50]
T12-9246-510	1/0	Copper	Silver	4	22.0	.281 [7.15]	.375 [9.53]	.365 [9.20]	.595 [15.11]	1.830 [46.50]
T12-9225-510	1/0	Copper	Silver	–	25.0	.307 [7.80]	.374 [9.50]	.365 [9.20]	.595 [15.11]	1.830 [46.50]
T12-9235-510	1/0	Copper	Silver	–	35.0	.354 [9.00]	.565 [14.35]	.365 [9.20]	.595 [15.11]	1.830 [46.50]
T12-9275-510	1/0	Copper	Silver	–	50.0	.421 [10.70]	.565 [14.35]	.365 [9.20]	.595 [15.11]	1.830 [46.50]
T12-9200-510	1/0	Copper	Silver	1/0	53.0	.453 [11.50]	.565 [14.35]	.365 [9.20]	.595 [15.11]	1.830 [46.50]
T12-9790-510	4/0	Copper	Silver	2	33.5	.354 [9.0]	.565 [14.35]	.506 [12.85]	.787 [20.0]	2.29 [58.2]
T12-97115-510	4/0	Copper	Silver	1/0	53.0	.453 [11.5]	.565 14.35]	.506 [12.85]	.787 [20.0]	2.22 [56.3]
T12-97135-510	4/0	Copper	Silver	2/0	67.4	.532 [13.5]	.650 [16.5]	.506 [12.85]	.787 [20.0]	2.28 [58.0]
T12-9700-510	4/0	Copper	Silver	4/0	107.0	.650 [16.5]	.787 [20.0]	.506 [12.85]	.787 [20.0]	2.49 [63.0]

Dimensions are in Inches [mm]

907-2*** SERIES

CRIMP ADAPTER FOR WIRE SIZE SMALLER/LARGER THAN CONTACT

907 - 2 XXX - XXX

SERIES PREFIX

WIRE SIZE
- **1** For Wire Size Larger Than Contact
- **2** For Wire Size Smaller Than Contact

DESCRIPTIVE NUMBER

MATERIAL/FINISH

CODE	MATERIAL	FINISH
-000*	360 Brass	Silver over nickel
-011*	360 Brass	Silver over nickel
-100	353 Brass	Unplated
-110	353 Brass	Silver over nickel
-140	353 Brass	Light gold over nickel
-142	353 Brass	Heavy gold over nickel

* Material/finish codes -000 & -011are obsolete. Both replaced by -110

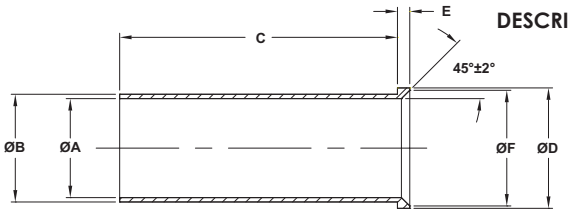

Dimensions are in Inches

PART NUMBER	CRIMP CONTACT WIRE BARREL SIZE AWG	WIRE SIZE AWG	WIRE SIZE MM	A +.002 -.003	B +.002 -.003	C +/-.015	D +/-.010	E +/-.010	F +/-.005
907-1050-***	22	20		See page 3C-10					
907-2005-***	20	26	0.15						
907-2011-***	20	26		#.023	.042	.120	.069	.015	.050
907-2010-***	20	24-30		.027	.042	.120	.069	.015	.050
907-1040-***	20	16		See page 3C-10					
907-1030-***	20	12							
907-2012-***	16		0.12		.063			.015	.068
907-2013-***	16	26			.063			.015	.068
907-2016-***	16	24			.063			.015	.068
907-2020-***	16	22-24		.035	.063	.230	.100	.015	.068
907-2021-***	16	22		#.035	.063	.230	.100	.015	.068
907-2022-***	16	22		.035	.063	.190	.100	.015	.068
907-2025-***	16	22		.043	.059	.149	.100	.015	.068
907-2030-***	16	20	0.60	.045	.063	.230	.100	.015	.068
907-1020-***	16	12		See page 3C-10					
907-2037-***	14	22		.043	.070	.230	.100	.015	.068
907-2039-***	12	18			.094		.140	.015	
907-2038-***	12	20		.046	.094	.221	.140	.015	
907-2040-***	12	16	1.50	.069	.094	.230	.140	.015	.092
907-1010-***	12	10		See page 3C-10					
907-2043-***	6.0 MM		1.50					.015	
907-2045-***	6.0 MM		2.50					.015	
907-2049-***	8	18	1.0		.173		.250	.031	.188
907-2050-***	8	16	1.5	.069	.173	.380	.250	.031	.188
907-2053-***	8		2.5		.173		.250	.031	.188
907-2055-***	8	14		.086	.173	.422	.250	.031	.188
907-2056-***	8		4.0		.173		.250	.031	.188
907-2060-***	8	12	3.0	.098	.173	.380	.250	.031	.188
907-2061-***	8	12		@.101	.173	.380	.250	.031	.188
907-2062-***	8	12		@.101	.173	.380	.250	.031	.188
907-2068-***	8	10			.173		.250	.031	.188
907-2070-***	8	10		.136	.173	.380	.250	.031	.188
907-2071-***	8		6.0				.250	.031	.188
907-2077-***	10 MM	12	3.0				.250	.031	.188
907-2080-***	6	10		.136	.225	.700	.297	.031	.188
907-2090-***	6	9		.155	.225	.700	.297	.031	.219
907-2100-***	6	8	9.0		.225		.297	.031	
907-2102-***	16 MM		2.5					.031	
907-2103-***	16 MM		4.0					.031	
907-2105-***	16 MM		6.0					.031	
907-2107-***	16 MM		10.0	@.197				.031	

= ± .001
@ = ± .002

SPACECRAFT COMPONENTS CORP.
3040 Clayton Street
North Las Vegas, NV 89032
Phone: 702.851.7600
Fax: 702.851.7620
Email: salesinfo@spacecraft.com
Web: www.spacecraft.com

CRIMP ADAPTER FOR WIRE SIZE SMALLER/LARGER THAN CONTACT

Dimensions are in Inches

PART NUMBER	CRIMP CONTACT WIRE BARREL SIZE AWG	WIRE SIZE AWG	WIRE SIZE MM	A +.002 -.003	B +.002 -.003	C +/-.015	D +/-.010	E +/-.010	F +/-.005
907-2108-***	4	10		.136	.272	.373	.344	.031	.219
907-2109-***	4		6.0		.272	.380	.344	.031	
907-2110-***	4	8	9.0	.185	.272	.380	.344	.031	.250
907-2111-***	4	8		.185	.272	.700	.344	.031	.250
907-2112-***	4		10.0	@.197	.272	.380	.344	.031	.250
907-2113-***	4		15.0		.272	.380	.344	.031	.250
907-2114-***	4		10.0	@.244	.272	.380	.344	.031	.250
907-2117-***	4	6	13.2		.272	.380	.344	.031	
907-2118-***	4	12			.272	.380	.344	.031	
907-2119-***	4		2.5		.272	.380	.344	.031	
907-2120-***	4	6	13.2	.225	.272	.380	.344	.031	.292
907-2130-***	4	6	13.2	.225	.272	.700	.344	.031	.292
907-2140-***	4	5		.250	.272	.380	.344	.031	.292
907-2150-***	4	5		.244	.272	.380	.344	.031	.292
907-2152-***	4		15.0		.272	.380	.344	.031	
907-2153-***	4		16.0		.272	.380	.344	.031	
907-2155-***	25 MM		6.0						
907-2156-***	25 MM		16.0						
907-2158-***	2	4							
907-2160-***	1	6	13.2	.225	.396	.700	.516	.031	.422
907-2170-***	1	2		.359	.396	.700	.516	.031	.422
907-2171-***	50 MM		25.0					.031	
907-2172-***	1/0	10		.136	.444	.644		.031	
907-2173-***	1/0	8	9.0	.185	.444	.644		.031	
907-2174-***	1/0		10.0		.444			.031	
907-2175-***	1/0	6	13.2		.444			.031	
907-2176-***	1/0		16.0		.444			.031	
907-2178-***	1/0		20.0		.444			.031	
907-2179-***	1/0		25.0		.444			.031	
907-2180-***	1/0	4		.299	.444	.536	.462	.031	.462
907-2181-***	1/0		10.0	@.197	.444	.500	.516	.031	.462
907-2182-***	1/0	2	16.0	@.244	.444	.500	.516	.031	.462
907-2183-***	1/0		25.0	@.307	.444	.500	.516	.031	.462
907-2184-***	1/0		35.0	@.354	.444	.500	.516	.031	.462
907-2185-***	1/0		50.0	@.421	.444	.500	.516	.031	.462
907-2190-***	1/0	2		.359	.444	.536	.516	.031	.462
907-2210-***	1/0	2		.417	.444	.536	.462	.031	.462
907-2200-***	1/0	1		.390	.444	.536	.462	.031	.462
907-2201-***	1/0		35.0		.444			.031	
907-2202-***	1/0		50.0		.444			.031	
907-2203-***	2/0	2		.359	.491	.528		.031	
907-2204-***	2/0		25.0		.491			.031	
907-2205-***	2/0		70.0		.491			.031	
907-2206-***	2/0		50.0		.491			.031	
907-2210-***	70 MM		25.0					.031	
907-2211-***	70 MM		50.0					.031	
907-2207-***	95 MM		70.0					.031	
907-2219-***	4/0	2	67.4		.629	.700	.719	.031	.462
907-2220-***	4/0	2/0	67.4	.500	.629	.700	.719	.031	.562
907-2221-***	4/0	3/0	67.4		.629	.700	.719	.031	.562
907-2230-***	150 MM		70.0	.500	.629	.700	.719	.031	.562
907-2240-***	190 MM	4/0	107.0					.031	
907-2250-***	DIN500		16.0					.031	
907-2253-***	DIN500		35.0					.031	

= ± .001
@ = ± .002

907-10*** SERIES

CRIMP ADAPTER FOR WIRE SIZE LARGER THAN CONTACT

907 - 1 XXX - XXX

SERIES PREFIX

WIRE SIZE
- **1** For Wire Size Larger Than Contact
- **2** For Wire Size Smaller Than Contact

DESCRIPTIVE NUMBER

MATERIAL/FINISH

CODE	MATERIAL	FINISH
-000*	360 Brass	Silver over nickel
-011*	360 Brass	Silver over nickel
-100	353 Brass	Unplated
-110	353 Brass	Silver over nickel
-140	353 Brass	Light gold over nickel
-142	353 Brass	Heavy gold over nickel

* Material/finish codes -000 & -011are obsolete. Both replaced by -110

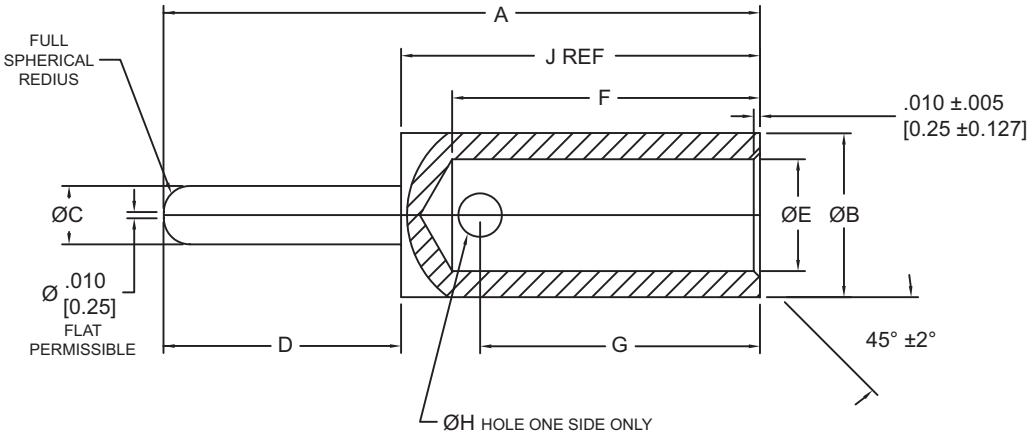

PART NUMBER	CRIMP CONTACT WIRE BARREL SIZE AWG	WIRE RANGE	A ±.010 [±0.25]	B ±.002 [±0.05]	C ±.002 [±0.05]	D ±.005 [±0.13]	E ±.002 [±0.05]	F ±.010 [±0.25]	G ±.005 [±0.13]	H ±.002 [±0.05]	J REF
907-1010-***	12	8-10	.807 [20.50]	.264 [6.71]	.094 [2.39]	.230 [5.84]	.181 [4.60]	.495 [12.57]	.450 [11.43]	.070 [1.78]	.577 [14.66]
907-1020-***	16	12-14	.549 [13.94]	.149 [3.78]	.062 [1.57]	.230 [5.84]	.100 [2.54]	.260 [6.60]	.220 [5.59]	.039 [0.99]	.319 [8.10]
907-1021-***	16	12-14	.617 [15.67]	.156 [3.96]	.062 [1.57]	.200 [5.08]	.100 [2.54]	.200 [5.08]	.160 [4.06]	.039 [0.99]	.400 [10.16]
907-1030-***	20	12-14	.509 [12.93]	.149 [3.78]	.038 [0.97]	.190 [4.83]	.100 [2.54]	.260 [6.60]	.220 [5.59]	.039 [0.99]	.319 [8.10]
907-1040-***	20	16-18	.499 [12.67]	.102 [2.59]	.038 [0.97]	.190 [4.83]	.067 [1.70]	.260 [6.60]	.220 [5.59]	.039 [0.99]	.309 [7.85]
907-1050-***	22	20-22	.363 [9.22]	.069 [1.75]	.029 [0.74]	.120 [3.05]	.047 [1.19]	.199 [5.05]	.190 [4.83]	.029 [0.74]	.243 [6.17]

Dimensions are in Inches [mm]

SPACECRAFT COMPONENTS CORP.
3040 Clayton Street
North Las Vegas, NV 89032
Phone: 702.851.7600
Fax: 702.851.7620
Email: salesinfo@spacecraft.com
Web: www.spacecraft.com

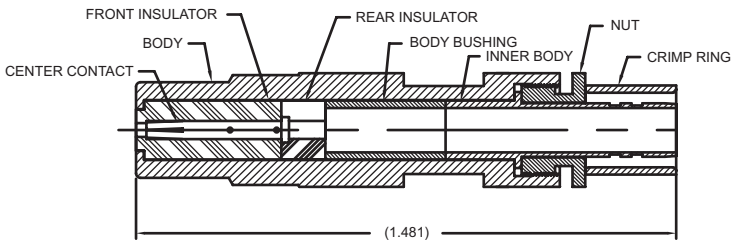

TYPICAL PIN CONSTRUCTION

A12-4XXX-853

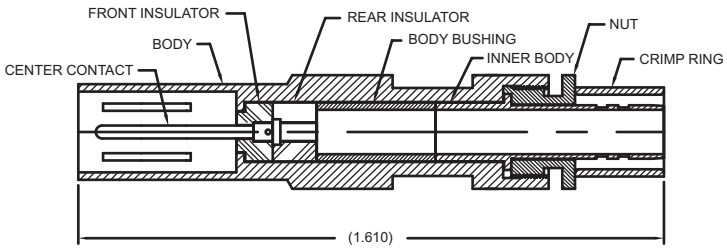

TYPICAL SOCKET COSTRUCTION

D12-4XXX-853

CABLE RG	PIN	SOCKET	CRIMP TOOL DIE*	DIE CLOSURE
RG-58	A12-4000-853	D12-4000-853	M22520/5-41	B
RG-141	A12-4020-853	D12-4020-853	M22520/5-41	B
RG-59	A12-4100-853	D12-4100-853	M22520/5-19	A
RG-62A; 62B	A12-4110-853	D12-4110-853	M22520/5-45	B
RG-174	A12-4200-853	D12-4200-853	M22520/5-35	B
RG-179B; 316	A12-4210-853	D12-4210-853	M22520/5-35	B
RG-180B	A12-4300-853	D12-4300-853	M22520/5-19	B

* Use crimp tool M22520/5-01

TOOLING

INSERTION, REMOVAL AND CRIMP TOOLS FOR **F80** CRIMP CONTACTS

CONTACT		WIRE SIZE (AWG)	INSERTION TOOL	REMOVAL TOOL KIT	GUIDE PINS	MANUAL CRIMP TOOL FRAME		PICO TOOLS MODEL 300		PICO TOOLS MODEL 400-BHD		PICO TOOLS MODEL 500-D	
						MS3191A	M22520/1-01	DIE PART NO. (Note 2)	LOCATOR PART NO.	DIE PART NO. (Note 2)	LOCATOR PART NO.	DIE PART NO. (Note 2)	LOCATOR PART NO.
P/N	SIZE					LOCATOR	LOCATOR						
R12-2500-★	18 Pin	20-26	T117346	T118249	–	–	–	–	–	414DA-20N	9632	514DA-20N	10627
T12-2500-★	18 Skt	20-26	T117346	T118249	T125000	–	–	–	–	414DA-20N	9641	514DA-20N	10640
R12-3600-★	16 Pin	16-18	T117345	T118250	–	600091†	TH378★	314DA-16	C17P	414DA-16N	9633	514DA-16N	10628
T12-3600-★	16 Skt	16-18	T117345	T118250	T125001	600092M†	TH378★	314DA-16	C17S	414DA-16N	9642	514DA-16N	10641
R12-3608-★	16 Pin	24-26	T117346	T118250	–	–	–	–	–	414DA-22N	9633	–	–
T12-3608-★	16 Skt	24-26	T117346	T118250	T125001	–	–	–	–	414DA-22N	9642	–	–
R12-3612-★	16 Pin	20	T117345	T118250	–	–	–	–	–	414DA-16N	9633	514DA-16N	10628
T12-3612-★	16 Skt	20	T117345	T118250	T125001	–	–	–	–	414DA-16N	9642	514DA-16N	10641
R12-3613-★	16 Pin	20-26	T117346	T118250	–	–	TH378★	314DA-20	C17P	414DA-16N	9633	514DA-16N	10628
T12-3613-★	16 Skt	20-26	T117346	T118250	T125001	–	TH378★	314DA-20	C17S	414DA-16N	9642	514DA-16N	10641
R12-3615-★	16 Pin	18	T117345	T118250	–	–	TH378★	314DA-20	C17P	414DA-16N	9633	514DA-16N	10628
T12-3615-★	16 Skt	18	T117345	T118250	T125001	–	TH378★	314DA-20	C17S	414DA-16N	9642	514DA-16N	10641
R12-3620-★	16 Pin	14	T117345	T118250	–	–	TH378★	314DA-16	C17P	414DA-16N	9633	514DA-16N	10628
T12-3620-★	16 Skt	14	T117345	T118250	T125001	–	TH378★	314DA-16	C17S	414DA-16N	9642	514DA-16N	10641
R12-3626-★	16 Pin	12	T117082	T118250	–	–	TH378★	314DA-12	C17P	414DA-12N	9633	514DA-12N	10628
T12-3626-★	16 Skt	12	T117082	T118250	T125001	–	TH378★	314DA-12	C17S	414DA-12N	9642	514DA-12N	10641
R12-3632-★	16 Pin	28-32	T117345	T118250	–	–	–	–	–	414DA-16N048	9633	514DA-16N048	10628
T12-3632-★	16 Skt	28-32	T117345	T118250	T125001	–	–	–	–	414DA-16N048	9642	514DA-16N048	10641
R12-4900-★	16S Pin	16-18	T117345	T118250	–	600093†	TH379★	314DA-16	C16P	414DA-16N	9634	514DA-16N	10629
T12-4900-★	16S Skt	16-18	T117345	T118250	T125001	600245†	TH379★	314DA-16	C16S	414DA-16N	9634	514DA-16N	10629
R12-4912-★	16S Pin	20	T117345	T118250	–	–	TH379★	314DA-20	C16P	414DA-16N	9634	514DA-16N	10629
T12-4912-★	16S Skt	20	T117345	T118250	T125001	–	TH379★	314DA-20	C16S	414DA-16N	9634	514DA-16N	10629
R12-4913-★	16S Pin	20-26	T117346	T118250	–	–	–	–	–	414DA-20N	9634	514DA-20N	10629
T12-4913-★	16S Skt	20-26	T117346	T118250	T125001	–	–	–	–	414DA-20N	9634	514DA-20N	10629
R12-4915-★	16S Pin	18	T177345	T118250	–	–	–	–	–	414DA-16N	9634	514DA-16N	10629
T12-4915-★	16S Skt	18	T117345	T118250	T125001	–	–	–	–	414DA-16N	9634	514DA-16N	10629
R12-4920-★	16S Pin	14	T117345	T118250	–	–	TH379★	314DA-16	C16P	414DA-16N	9634	514DA-16N	10629
T12-4920-★	16S Skt	14	T117345	T118250	T125001	–	TH379★	314DA-16	C16S	414DA-16N	9634	514DA-16N	10629
R12-4926-★	16S Pin	12	T117082	T118250	–	–	–	–	–	414DA-18N	9634	514DA-18N	10629
T12-4926-★	16S Skt	12	T117082	T118250	T125001	–	–	–	–	414DA-18N	9634	514DA-18N	10629
R12-6400-★	12 Pin	12	T117082	T118250	–	600216†	TH378★	–	–	414DA-12N	9635	514DA-12N	10630
T12-6400-★	12 Skt	12	T117082	T118250	T125002	600216†	TH378★	–	–	414DA-12N	9635	514DA-12N	10630
R12-6408-★	12 Pin	8	T117082	T118250	–	–	–	–	–	414DA-6N155	9635	514DA-6N155	10630
T12-6408-★	12 Skt	8	T117082	T118250	T125002	–	–	–	–	414DA-6N155	9635	514DA-6N155	10630
R12-6412-★	12 Pin	20	T117345	T118250	–	–	–	–	–	414DA-16N	9635	514DA-16N	10630
T12-6412-★	12 Skt	20	T117345	T118250	T125002	–	–	–	–	414DA-16N	9635	514DA-16N	10630
R12-6415-★	12 Pin	18	T117082	T118250	–	600216†	TH378★	–	–	414DA-16N	9635	514DA-16N	10630
T12-6415-★	12 Skt	18	T117082	T118250	T125002	600216†	TH378★	–	–	414DA-16N	9635	514DA-16N	10630
R12-6420-★	12 Pin	14-18	T117082	T118250	–	–	–	–	–	414DA-10N096	9635	514DA-10N096	10630
T12-6420-★	12 Skt	14-18	T117082	T118250	T125002	–	–	–	–	414DA-10N096	9635	514DA-10N096	10630
R12-6422-★	12 Pin	2.5mm²	T117082	T118250	–	620216†	–	–	–	414DA-8N142	9635	514DA-8N142	10630
T12-6422-★	12 Skt	2.5mm²	T117082	T118250	T125002	620216†	–	–	–	414DA-8N142	9635	514DA-8N142	10630
R12-6430-★	12 Pin	4.0mm²	T117082	T118250	–	7100659†	–	–	–	414DA-10N096	9635	514DA-10N096	10630
T12-6430-★	12 Skt	4.0mm²	T117082	T118250	T125002	7100659†	–	–	–	414DA-10N	9635	514DA-10N	10630
R12-6431-★	12 Pin	4.0mm²	T117082	M118250	–		–	–	–	414DA-10N	9635	514DA-10N	10630
T12-6431-★	12 Skt	4.0mm²	T117082	M118250	T125002	–	–	–	–	414DA-18N	9635	514DA-18N	10630
R12-6438-★	12 Pin	6.0mm²	T117082	M118250	–	–	–	–	–	414DA-10N	9635	514DA-10N	10630
T12-6438-★	12 Skt	6.0mm²	T117082	M118250	T125002	–	–	–	–	414DA-10N	9635	514DA-10N	10630

★ Indicates additional alpha-numerics are required to complete part number.
† Locators provided by Astro Tool.
Note 1. Consult Sales Department
Note 2. Pico Tools Die part numbers ending in letter N are for an 8 indent crimp. For a Hex crimp, change letter N to HEX.

CONTINUED ON NEXT PAGE

SPACECRAFT COMPONENTS CORP.
3040 Clayton Street
North Las Vegas, NV 89032
Phone: 702.851.7600
Fax: 702.851.7620
Email: salesinfo@spacecraft.com
Web: www.spacecraft.com

INSERTION, REMOVAL AND CRIMP TOOLS FOR **F80** CRIMP CONTACTS

CONTINUED FROM PREVIOUS PAGE

CONTACT		WIRE SIZE (AWG)	INSERTION TOOL	REMOVAL TOOL KIT	GUIDE PINS	MANUAL CRIMP TOOL FRAME		PICO TOOLS MODEL 300		PICO TOOLS MODEL 400B HD		PICO TOOLS MODEL 500D	
						MS3191A	M22520/1-01	DIE PART NO. (Note 2)	LOCATOR PART NO.	DIE PART NO. (Note 2)	LOCATOR PART NO.	DIE PART NO. (Note 2)	LOCATOR PART NO.
P/N	SIZE					LOCATOR	LOCATOR						
R12-7900-★	8 Pin	8	T117344	T118260	Not Re-quired	–	–	–	–	414DA-6N155	9636	514DA-6N155	10631
T12-7900-★	8 Skt	8	T117344	T118260		–	–	–	–	414DA-6N155	9636	514DA-6N155	10631
R12-7915-★	8 Pin	18	T117082	T118260		–	–	–	–	414DA-12N077	9636	514DA-12N077	10631
T12-7915-★	8 Skt	18	T117082	T118260		–	–	–	–	414DA-12N077	9636	514DA-12N077	10631
R12-7918-★	8 Pin	14-18	T117082	T118260		–	–	–	–	414DA-18N	9636	514DA-18N	10631
T12-7918-★	8 Skt	14-18	T117082	T118260		–	–	–	–	414DA-18N	9636	514DA-18N	10631
R12-7926-★	8 Pin	12	T117082	T118260		–	–	–	–	414DA-18N	9636	514DA-18N	10631
T12-7926-★	8 Skt	12	T117082	T118260		–	–	–	–	414DA-18N	9636	514DA-18N	10631
R12-7930-★	8 Pin	4.0mm²	T117082	T118260		–	–	–	–	414DA-10N096	9636	514DA-10N096	10631
T12-7930-★	8 Skt	4.0mm²	T117082	T118260		–	–	–	–	414DA-10N096	9636	514DA-10N096	10631
R12-7950-★	8 Pin	10.0mm²	T117344	T118260		–	–	–	–	414DA-8N142	9636	514DA-8N142	10631
T12-7950-★	8 Skt	10.0mm²	T117344	T118260		–	–	–	–	414DA-8N142	9636	514DA-8N142	10631
R12-7958-★	8 Pin	6	Note 1	T118260		–	–	–	–	414DA-6N170	9636	514DA-6N170	10631
T12-7958-★	8 Skt	6	Note 1	T118260		–	–	–	–	414DA-6N170	9636	514DA-6N170	10631
R12-8500-★	4 Pin	4	T117347	T118270	Not Re-quired	–	–	–	–	414DA-4N215	9637	514DA-4N215	10632
T12-8500-★	4 Skt	4	T117347	T118270		–	–	–	–	414DA-4N215	9637	514DA-4N215	10632
R12-8522-★	4 Pin	2.5mm²	T117082	T118270		–	–	–	–	414DA-18N	9637	514DA-18N	10632
T12-8522-★	4 Skt	2.5mm²	T117082	T118270		–	–	–	–	414DA-18N	9637	514DA-18N	10632
R12-8525-★	4 Pin	25.0mm²	T117347	T118270		–	–	–	–	414DA-4N	9637	514DA-4N	10632
T12-8525-★	4 Skt	25.0mm²	T117347	T118270		–	–	–	–	414DA-4N	9637	514DA-4N	10632
R12-8526-★	4 Pin	12	T117082	T118270		–	–	–	–	414DA-10N	9637	514DA-10N	10632
T12-8526-★	4 Skt	12	T117082	T118270		–	–	–	–	414DA-10N	9637	514DA-10N	10632
R12-8530-★	4 Pin	4.0mm²	T117082	T118270		–	–	–	–	414DA-10N105	9637	514DA-10N105	10632
T12-8530-★	4 Skt	4.0mm²	T117082	T118270		–	–	–	–	414DA-10N105	9637	514DA-10N105	10632
R12-8535-★	4 Pin	35.0mm²	T117348	T118270		–	–	–	–	414DA-0N315	9637	514DA-0N315	10632
T12-8535-★	4 Skt	35.0mm²	T117348	T118270		–	–	–	–	414DA-0N315	9637	514DA-0N315	10632
R12-8550-★	4 Pin	10.0mm²	T117344	T118270		–	–	–	–	414DA-8N142	9637	514DA-8N142	10632
T12-8550-★	4 Skt	10.0mm²	T117344	T118270		–	–	–	–	414DA-8N142	9637	514DA-8N142	10632
R12-8562-★	4 Pin	16.0mm²	T117347	T118270		–	–	–	–	414DA-4N	9637	514DA-4N	10632
T12-8562-★	4 Skt	16.0mm²	T117347	T118270		–	–	–	–	414DA-4N	9637	514DA-4N	10632
R12-9200-★	1/0 Pin	1/0	T117348	T118280	Not Re-quired	–	–	–	–	414DA-0N	9638	514DA-0N	10633
T12-9200-★	1/0 Skt	1/0	T117348	T118280		–	–	–	–	414DA-0N	9638	514DA-0N	10633
R12-9225-★	1/0 Pin	25.0mm²	T117347	T118280		–	–	–	–	414DA-4N	9638	514DA-4N	10633
T12-9225-★	1/0 Skt	25.0mm²	T117347	T118280		–	–	–	–	414DA-4N	9638	514DA-4N	10633
R12-9235-★	1/0 Pin	35.0mm²	T117348	T118280		–	–	–	–	414DA-0N	9638	514DA-0N	10633
T12-9235-★	1/0 Skt	35.0mm²	T117348	T118280		–	–	–	–	414DA-0N	9638	514DA-0N	10633
R12-9245-★	1/0 Pin	8	T117344	T118280		–	–	–	–	414DA-6N155	9638	514DA-6N155	10633
T12-9245-★	1/0 Skt	8	T117344	T118280		–	–	–	–	414DA-6N155	9638	514DA-6N155	10633
R12-9246-★	1/0 Pin	4	Note 1	T118280		–	–	–	–	414DA-4N	9638	514DA-4N	10633
T12-9246-★	1/0 Skt	4	Note 1	T118280		–	–	–	–	414DA-4N	9638	514DA-4N	10633
R12-9250-★	1/0 Pin	10.0mm²	T117344	T118280		–	–	–	–	414DA-4N	9638	514DA-4N	10633
T12-9250-★	1/0 Skt	10.0mm²	T117344	T118280		–	–	–	–	414DA-4N	9638	514DA-4N	10633
R12-9275-★	1/0 Pin	50.0mm²	T117348	T118280		–	–	–	–	414DA-0N	9638	514DA-0N	10633
T12-9275-★	1/0 Skt	50.0mm²	T117348	T118280		–	–	–	–	414DA-0N	9638	514DA-0N	10633
R12-9700-★	4/0 Pin	4/0	Note 1	Note 1	Not Re-quired	–	–	–	–	–	–	514DA-N470	10636
T12-9700-★	4/0 Skt	4/0	Note 1	Note 1		–	–	–	–	–	–	514DA-N470	10639
R12-9790-★	4/0 Pin	2	Note 1	Note 1		–	–	–	–	414DA-0N	9639	514DA-0N	10634
T12-9790-★	4/0 Skt	2	Note 1	Note 1		–	–	–	–	414DA-0N	9640	514DA-0N	10637
R12-97115-★	4/0 Pin	1/0	Note 1	Note 1		–	–	–	–	414DA-0N	9639	514DA-0N	10634
T12-97115-★	4/0 Skt	1/0	Note 1	Note 1		–	–	–	–	414DA-0N	9640	514DA-0N	10637
R12-97135-★	4/0 Pin	2/0	Note 1	Note 1		–	–	–	–	–	–	514DA-N345	10635
T12-97135-★	4/0 Skt	2/0	Note 1	Note 1		–	–	–	–	–	–	514DA-N345	10638

Note 1. Consult sales department.
Note 2. Pico Tools Die part numbers ending in letter N are for an 8 indent crimp. For Hex crimp, change letter N to HEX.
★ Indicates additional alpha-numerics are required to complete part number.
† Locators provided by Astro Tool.

TOOLING

INSERTION AND REMOVAL TOOLS FOR **F80** CRIMP CONTACTS

ALTERNATE INSERTION TOOLS

CONTACT SIZE	SPACECRAFT	ASTRO TOOL	BENDIX	ITT CANNON	COMMITAL	DANIELS	VEAM
18	T117346	–	–	–	M.117346	–	T98143
16	T117345	ATBX1-7345	11-7345	CIT-F80-16	M.117345	DAK168-16	11-7345
12	T117082	ATBX1-7082	11-7082	CIT-F80-12	M.117082	DAK168-12	46736
8	T117344	ATBX1-8220	11-8220	CIT-8	M117344	DAK159	A46151-8T50
4	T117347	ATC1377	11-7365-4*	CIT-4	M.117347	–	A46151-4T50
1/0	T117348	–	11-7365-5*	CIT-0	M.117348	–	A46151-0T50

* Requires 11-7364 Arbor Press

ALTERNATE REMOVAL TOOLS

CONTACT SIZE	SPACECRAFT	ASTRO TOOL	BENDIX	ITT CANNON	COMMITAL	DANIELS	VEAM
18	T118249	–	–	–	M.118249	–	11-7576-37
16	T118250	ATBX2-8250	11-8250(Kit)	CET-F80-16	M.118250	DRK59	A43240
12	T118250	ATBX2-8250	11-8250(Kit)	CET-F80-12	M.118250	DRK59	A43240
8	T118260	ATBX2-8250	11-8250(Kit)	CET-8	M.118260	DRK59	A43240-8
4	T118270	ATC2234	P=11-7370-4* S=11-7674-2*	CET-4	M.118270	–	46150-4
1/0	T118280	–	P=11-7370-5* S=11-7674-3*	CET-0	M.118280	–	46150-0

* Requires 11-7364 Arbor Press

ALTERNATE GUIDE PINS

CONTACT SIZE	SPACECRAFT	BENDIX	ITT CANNON	COMMITAL	VEAM
18	T125000	–	–	M.125000	27977-20T50
16	T125001	Unknown	226-1017-000	M.125001	27977-16T50
12	T125002	Unknown	226-1018-000	M.125002	27977-16T50
8	T125003	Unknown	Not Required	M.125003	Not Required
4	Not Required	Not Required	Not Required	Not Required	Not Required
1/0	Not Required	Not Required	Not Required	Not Required	Not Required

SPACECRAFT COMPONENTS CORP.
3040 Clayton Street
North Las Vegas, NV 89032
Phone: 702.851.7600
Fax: 702.851.7620
Email: salesinfo@spacecraft.com
Web: www.spacecraft.com

A thermocouple is essentially a pair of wires of dissimilar metals connected at both ends. When the two junctions are subjected to different temperatures, an electrical potential is set up between them, almost directly proportional to the temperature difference. A voltage measuring instrument in the circuit can thus measure temperature. Because thermocouple junctions can withstand higher temperatures than the connectors used in conjunction with them, care must be taken to isolate the connectors. While contacts can withstand temperatures shown in the following table, standard insert materials can withstand only 257°F continuous operation. However, special dielectrics and shell finishes can extend the usable connector range above 500°F.

THERMOCOUPLE LIMITS

COMBINATION	CONDITIONS	TEMPERATURE RANGE	
Copper-Constantan (Note 1)	Material has good resistance to corrosion with long life and stable calibration.	Thermocouple Junction: Connector Contacts:	Below 500°F 400°F
Iron-Constantan (Note 1)	Material can be used in either oxidizing or reducing atmospheres. It is not recommended for low temperatures and in the presence of moisture due to the rusting of the iron.	Thermocouple Junction: Connector Contacts:	500°F to 1200°F *600°F
Chromel-Alumel (Note 1)	Material is good for high temperature work and is more stable than iron and constantan combinations.	Thermocouple Junction: Connector Contacts:	High Temperature *400°F

* These contacts can withstand higher temperatures but have not been tested because the general line of connectors will not withstand such temperatures in continuous operation.
(Note 1) - These are registered Trade names of the Hoskins Corporation.

THERMOCOUPLE MATERIALS

CONTACT DESIGNATION	MATERIAL	ASTM-E230 SPECIFICATIONS	Polarity	MAGNETISM
Alumel (Al) (Note 1)	94% Nickel; 2.5% Manganese; 2% Aluminum; 1% Silicone; ½% Iron	Type KN	Negative	Magnetic
Constantan (Co) (Note 1)	45% to 60% Copper; 40% to 55% Nickel; 0 to 1.4% Manganese; 0.1% Iron	Type JN	Negative	Non-Magnetic
Copper (Cu) (Note 1)	87.5 to 90% Copper; 1.8 to 2.2% Lead; .1% Iron; 5% Nickel; .5% normal impurities and balance zinc	Type T	Positive	Non-Magnetic
Iron (Ir) (Note 1)	84.4% Iron; 2% Carbon; 3% manganese; 6% Phosphorus; 2% Sulphur; 4% Silicone; 8.1% Copper; 9% Tin (Cadmium plated for corrosion resistance)	Type JP	Positive	Magnetic
Chromel P (Ch) (Note 1)	90% Nickel; 10% Chromium	Type KP	Positive	Non-Magnetic

(Note 1) - These are registered Trade names of the Hoskins Corporation.

CONTACT COLOR CODING

CONTACT MATERIAL	COLOR
Alumel	Green
Chromel	White
Copper	–
Constantan	Yellow
Iron	Black

For solder thermocouple contacts, see page 11A-3.
For crimp thermocouple contacts, see pages 11A-4 thru 11A-7.

Need a Special Component for a Special Project?

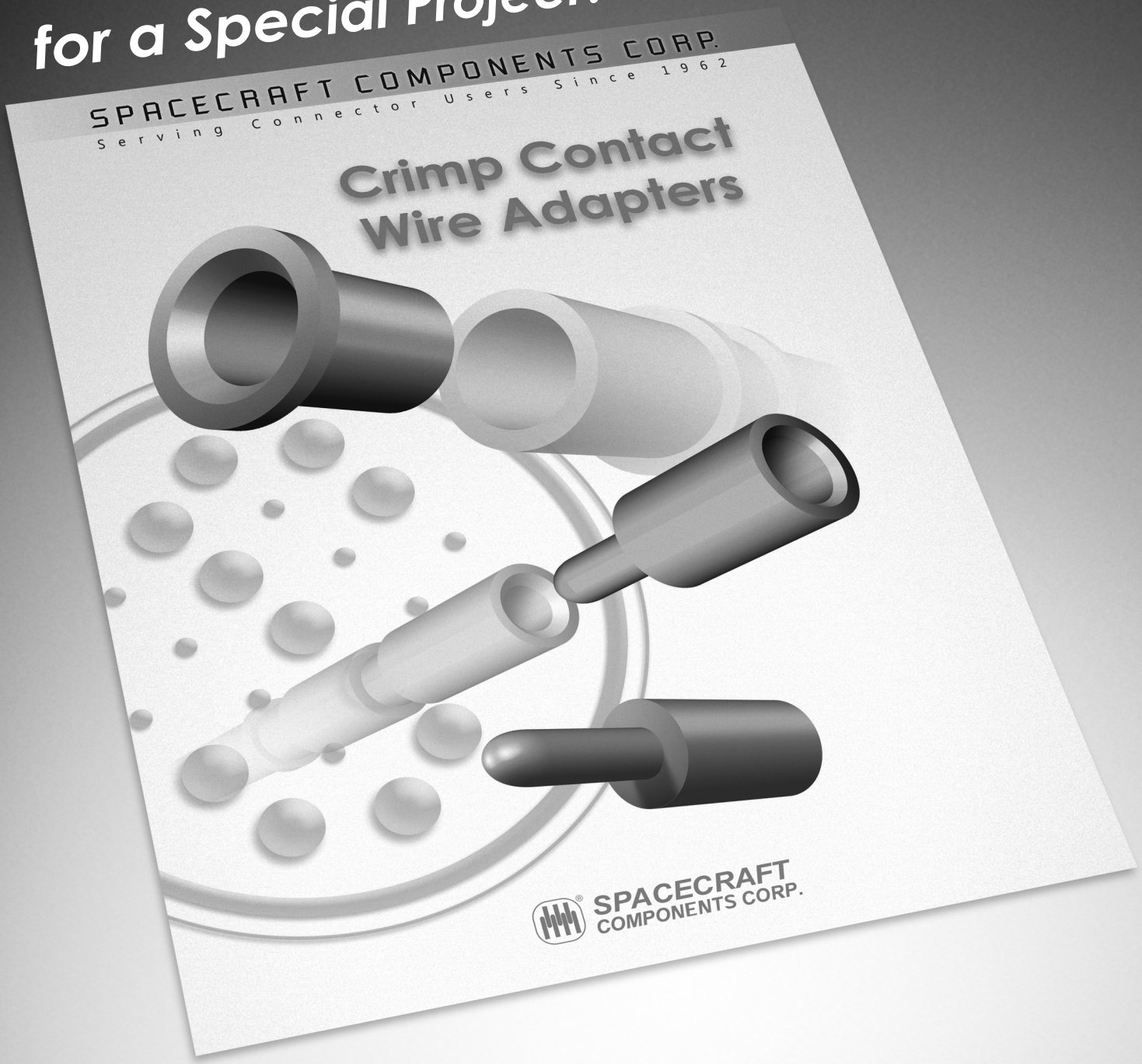

Spacecraft has a wide range of specialized products aimed at providing our customers with solutions to a wide range of issues, whether it be harsh environments, quick connect/disconnect needs, vibration resistance, and so much more.

Contact Spacecraft to discover what solutions we can offer you, or visit our website to view our line of specialized products.

SPACECRAFT
COMPONENTS CORP.

702-851-7600

www.spacecraft.com

SECTION 4C
INSERT CONFIGURATIONS

ALTERNATE POSITIONS (POLARIZATION)

The diagrams indicate alternate insert positions. The four positions (W, X, Y, and Z) differ in degree of rotation for various sizes and layouts.

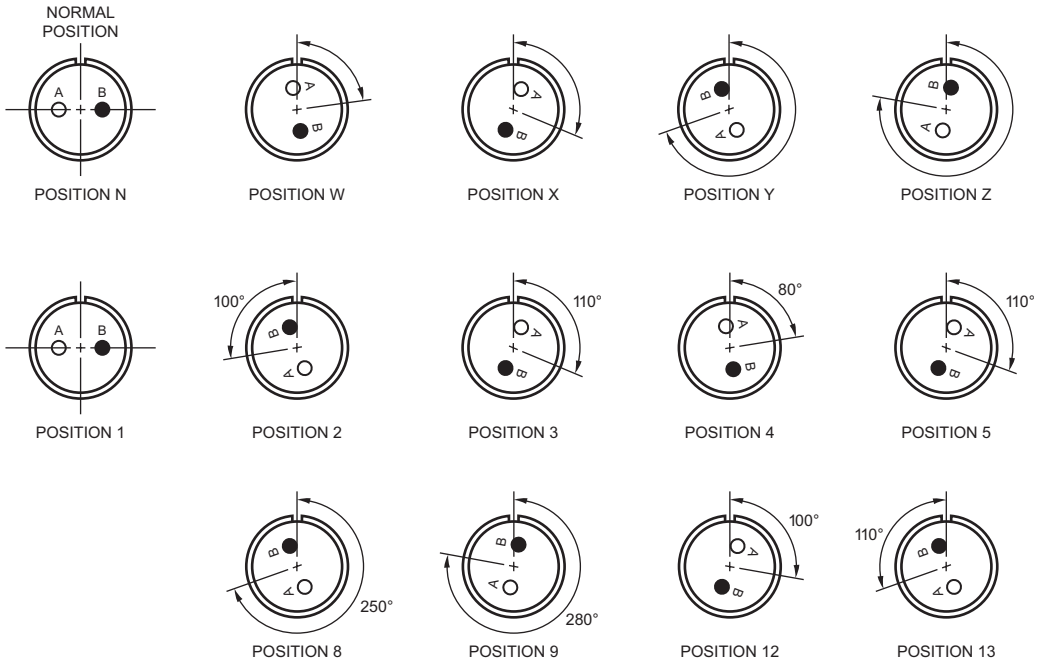

ENGAGING FACE OF PIN INSERTS SHOWN
SOCKET INSERTS ARE MIRROR IMAGES

AS50151

INSERT CONFIGURATIONS BY SHELL SIZE

PART NUMBER	CONTACTS								ALTERNATE POSITIONS (Degrees)				REMARKS
	TOTAL	SIZE											
		# 20	# 18	# 16	# 12	# 8	# 4	# 0	W	X	Y	Z	
8S-1†	1			1					–	–	–	–	
10S-2†	1			1					–	–	–	–	
10SL-3†★	3			3					–	–	–	–	Position Q = 180°
10SL-4‡★	2			2					–	–	–	–	
12S-1‡	2			2					–	–	–	–	Position #12 of 12S-3
12S-2‡	2			2					–	–	–	–	Position #13 of 12S-3
12S-3‡	2			2					70	145	215	290	
12S-4‡	1			1					–	–	–	–	
12-5‡	1			1					–	–	–	–	
14S-1‡	3			3					–	–	–	–	Same as 14S-7
14S-2†	4			4					–	120	240	–	
14-3†	1					1			–	–	–	–	
14S-4‡	1			1					–	–	–	–	
14S-5†	5			5					90	110	–	–	Non-Military Positions W=90°
14S-6†	6			6					–	–	–	–	Non-Military Positions W=80°
14S-07	7			7					–	–	–	–	Use 14SA7
14SA7	7			7					–	–	–	–	Replaces: 14SA7, 14-07
14S-7†	3			3					90	180	270	–	
14S-9‡	2			2					70	145	215	290	
14S-10‡	4			4					–	–	–	–	Position #12 of 14S-2
14S-11‡	4			4					–	–	–	–	Position #13 of 14S-2
14S-12‡	3			3					–	–	–	–	Position #12 of 14S-1
14S-13‡	3			3					–	–	–	–	Position #2 of 14S-1
14S-14‡	4			4					–	–	–	–	Position #12 of 14S-2
16S-1†★	7			7					80	–	–	280	
16-2†	1				1				–	–	–	–	
16S-3†	1			1					–	–	–	–	
16S-4†★	2			2					35	110	250	325	
16S-5‡	3			3					70	145	215	290	
16S-6‡	3			3					90	180	270	–	
16-7†	3			2		1			80	110	250	280	
16S-8†	5			5					–	170	265	–	
16-9†	4			2	2				35	110	250	325	
16-10†★	3				3				90	180	270	–	
16A10	10			10					35	112	235	315	
16-11†	2				2				35	110	250	325	
16A11★	2				2				–	110	250	–	
16-12†★	1						1		–	–	–	–	
16S-14‡	3			3					–	–	–	–	Position #3 of 16S-5
16S-15†	2			2					–	–	–	–	Position #12 of 16S-4
16S-16†	2			2					–	–	–	–	Position #13 of 16S-4
18-1†★	10			10					70	145	215	290	
18-3‡	2				2				35	110	250	325	
18-4†	4			4					35	110	250	325	
18-5†	3			1	2				80	110	250	280	
18-06†	6			2	4				–	180	–	–	Use 18A6
18-6†	1						1		–	–	–	–	
18A6	6			2	4				–	180	–	–	
18-7†	1					1			–	–	–	–	
18-8†	8			7	1				70	–	–	290	
18-9†	7			5	2				80	110	270	280	

† = Military designation per MIL-STD-1651
‡ = Military designation inactive for new design.
★ = VG95234

SPACECRAFT COMPONENTS CORP.
3040 Clayton Street
North Las Vegas, NV 89032
Phone: 702.851.7600
Fax: 702.851.7620
Email: salesinfo@spacecraft.com
Web: www.spacecraft.com

INSERT CONFIGURATIONS BY SHELL SIZE

PART NUMBER	CONTACTS								ALTERNATE POSITIONS (Degrees)				REMARKS
	TOTAL	SIZE											
		# 20	# 18	# 16	# 12	# 8	# 4	# 0	W	X	Y	Z	
18-10‡	4				4				–	120	240	–	
18-11†★	5				5				–	170	265	–	
18-12†	6			6					80	–	–	280	
18-13†★	4				3	1			80	110	250	280	
18-14†	2			1			1		80	110	250	280	
18-15†	4				4				–	120	240	–	
18-16	1				1				–	–	–	–	High voltage
18-17‡	7			5	2				–	–	–	–	100 Deg Rotation To Right of 18-9
18-18‡	7			5	2				–	–	–	–	250 Deg Rotation To Right of 18-9
18-19‡	10			10					–	120	240	–	
18-20‡	5			5					90	180	270	–	
18-21‡	3				3				90	180	270	–	
18-22‡	3			3					70	145	215	290	
18-23‡	10			10					–	–	–	–	Position #12 of 18-1
18-24‡	10			10					–	–	–	–	Position #13 of 18-1
18-25‡	2				2				–	–	–	–	Position #12 of 18-3
18-26‡	2				2				–	–	–	–	Position #13 of 18-3
18-27‡	3			1	2				–	–	–	–	Position #12 of 18-5
18-28‡	3			1	2				90	180	270	–	Position #13 of 18-5
18-29‡	5			5					90	180	270	–	
18-30‡	5			5					–	–	–	–	Position #3 of 18-20
18-31‡	5			5					–	–	–	–	Position #2 of 18-20
18A31	10			10					–	–	–	–	Position #5 of 18-1
18-2005-31	10			10					–	–	–	–	Position #5 of 18-1
20-1‡	14			14					–	–	–	–	Same as 20-27
20-2†★	1							1	–	–	–	–	
20-3‡	3				3				70	145	215	290	
20-4†	4				4				45	110	250	–	
20-5‡	2			2					35	110	250	325	
20-6‡	3			3					70	145	215	290	
20-7†	8			8					80	110	250	280	
20-8†★	6			4		2			80	110	250	280	
20B8	8			4	4				–	–	–	–	
20-9†	8			7	1				80	110	250	280	
20A9★	9			9					–	110	250	–	
20-10‡	4			4					–	–	–	–	
20-11‡	13			13					–	–	–	–	
20-12‡	2			1			1		80	110	250	280	
20-13‡	4			4					–	–	–	–	
20-14†	5				3	2			80	110	250	280	
20-15†★	7				7				80	–	–	280	
20-16†	9			7	2				80	110	250	280	
20A16	13			13					–	–	–	–	Same as 20-11
20-17†	6			1	5				90	180	270	–	
20-18†	9			6	3				35	110	250	325	
20-19‡	3					3			90	180	270	–	
20-20‡	4				3		1		80	110	250	280	
20-21†	9			8	1				35	110	250	325	
20-22†	6			3		3			80	110	250	280	
20-23‡	2					2			35	110	250	325	
20-24‡	4			2		2			35	110	250	325	

† = Military designation per MIL-STD-1651
‡ = Military designation inactive for new design.
★ = VG95234

AS50151

INSERT CONFIGURATIONS BY SHELL SIZE

PART NUMBER	CONTACTS								ALTERNATE POSITIONS (Degrees)				REMARKS
	TOTAL	SIZE											
		# 20	# 18	# 16	# 12	# 8	# 4	# 0	W	X	Y	Z	
20-25‡	13			13					–	–	–	–	Position #12 of 20-11
20-26‡	3				3				–	–	–	–	
20-27†	14			14					35	110	250	325	
20-29†	17			17					80	–	–	280	
20-30‡	13			13					–	–	–	–	Position #13 of 20-11
20-31‡	11			11					–	–	–	–	
20-32‡	8			8					–	–	–	–	Position #2 of 20-7
20-33†	11			11					–	–	–	280	Non-Military Positions Z=280°
20A48★	19			19					–	80	280	–	
20-58	10			5	5				–	–	–	–	
20-629	4			4					–	–	–	–	Same as 20-10
20-854	2				2				–	–	–	–	
20-2006-37	4				4				–	–	–	–	Position #8 of 20-4
22-1‡	2					2			35	110	250	325	
22-2†	3					3			70	145	215	290	
22-3‡	2			1			1		80	110	250	280	
22-4‡	4				2	2			35	110	250	325	
22-5‡	6			4	2				35	110	250	325	
22-6‡	3			1		2			80	110	250	280	
22-7†	1							1	–	–	–	–	
22-8‡	2				2				35	110	250	325	
22-9†	3				3				70	145	215	290	
22-10†	4			4					35	110	250	325	
22A10	10			10					–	120	240	–	
22-11†	2			2					35	110	250	325	
22-12†★	5			3		2			80	110	250	280	
22-13‡	5			1	4				35	110	250	325	
22-14†★	19			19					80	110	250	280	
22-15†	6			1	5				80	110	250	280	
22-16‡	9			6	3				80	110	250	280	
22-17†	9			8	1				80	110	250	280	
22-18†	8			8					80	110	250	280	
22-19†	14			14					80	110	250	280	
22-20‡	9			9					35	110	250	325	
22-21†	3			2				1	80	110	250	280	
22-22†★	4					4			–	110	250	–	
22B22★	4					4			–	110	250	–	
22-23†	8				8				35	–	250	–	
22-24‡	6			4	2				80	110	250	280	
22-25‡	3			2				1	80	110	250	280	
22-26‡	7			5	2				–	–	–	–	
22-27†★	9			8		1			80	–	250	280	
22-28‡	7				7				80	–	–	280	
22-29‡	7			6			1		80	110	250	280	
22-30‡	19			19					–	–	–	–	Position #12 of 22-14
22-31‡	2			2					–	–	–	–	Position #12 of 22-11
22-32‡	6			4	2				–	–	–	–	Position #2 of 22-5
22-33‡	7			7					80	110	250	280	
22-34‡	5			2	3				80	110	250	280	
22-35‡	3					3			–	–	–	–	
22A37	37		37						80	112	250	280	
22-63	12			8	4				–	–	–	–	

† = Military designation per MIL-STD-1651
‡ = Military designation inactive for new design.
★ = VG95234

SPACECRAFT COMPONENTS CORP.
3040 Clayton Street
North Las Vegas, NV 89032
Phone: 702.851.7600
Fax: 702.851.7620
Email: salesinfo@spacecraft.com
Web: www.spacecraft.com

INSERT CONFIGURATIONS BY SHELL SIZE

PART NUMBER	CONTACTS								ALTERNATE POSITIONS (Degrees)				REMARKS
	TOTAL	SIZE											
		# 20	# 18	# 16	# 12	# 8	# 4	# 0	W	X	Y	Z	
22-70	13			5	8				–	–	–	–	
22-82	10			8		2			80	110	250	280	
24-1†	2			1				1	80	110	250	280	
24A1	1							1	–	–	–	–	
24-2†	7				7				80	–	–	280	
24-3‡	7			5	2				80	110	250	280	
24-4†	4			3				1	80	110	250	280	
24-5‡	16			16					80	110	250	280	
24G5	5					5			70	110	240	270	
24-06	6			2		4			40	–	–	320	Use 24C06
24-6†	8				8				80	110	250	280	
24A6	6				4	2			40	–	–	320	
24C06	6			2		4			40	–	–	320	
24-07	7				7				80	–	–	280	Use 24A7
24-7†	16			14	2				80	110	250	280	
24A7	7				7				80	–	–	280	
24-9‡	2						2		35	110	250	325	
24-10†★	7					7			80	–	–	280	
24-11†★	9				6	3			35	110	250	325	
24-12†★	5				3		2		80	110	250	280	
24S12	12			10			2						
24-013	13			7	6				–	–	–	–	Use 24A13
24A13	13			7	6				–	–	–	–	
24-14‡	3				2			1	80	110	250	280	
24S14‡	14			12			2						
24-15‡	16			16					–	–	–	–	Position #12 of 24-5
24-16†	7			3	3	1			80	110	250	280	
24-17‡	5			3	2				80	110	250	280	
24-18	4			4					–	–	–	–	Shorting type
24-19‡	12			12					–	–	–	–	
24-20†	11			9	2				80	110	250	280	
24-21†	10			9		1			80	110	250	280	
24-22†	4					4			45	110	250	–	
24-23‡	5			2		3			80	110	250	280	
24-24‡	16			16					–	–	–	–	Position #13 of 24-5
24-25‡	8				8				–	–	–	–	Position #12 of 24-6
24A25	25			25					80	110	250	280	
24-26‡	8				8				–	–	–	–	Position #13 of 24-6
24-27†	7			7					80	–	–	280	
24-28†	24			24					80	110	250	280	
24A28	28			28					65	146	235	–	
24A35★	16				14	2			–	–	–	–	Position #12 of 24-7
24A40	16			14	2				–	–	–	–	
24A55	55	55							90	110	250	280	
24-58	13			7	3	3			–	–	–	–	
24-59	14			7	7				–	–	–	–	
24-65	15			4	11				–	–	–	–	
24-66	7				7				–	–	–	–	
24-67	19				19				80	–	–	335	
24-79	5					5			–	–	–	–	
24-80†	23			23					35	145	240	300	
24-2008-35	16			14	2				–	–	–	–	Position #12 of 24-7 Same as 24A35

† = Military designation per MIL-STD-1651
‡ = Military designation inactive for new design.
★ = VG95234

AS50151

INSERT CONFIGURATIONS BY SHELL SIZE

PART NUMBER	CONTACTS								ALTERNATE POSITIONS (Degrees)				REMARKS
	TOTAL	SIZE											
		# 20	# 18	# 16	# 12	# 8	# 4	# 0	W	X	Y	Z	
28-1†	9				6	3			80	110	250	280	
28B1	1							1	–	–	–	–	
28-2†	14			12	2				35	110	250	325	
28-3†	3					3			70	145	215	290	
28-4†	9			7	2				80	110	250	280	
28-5†	5			2	1		2		35	110	250	325	
28-6‡	3						3		70	145	215	290	
28-7†	2						2		35	110	250	325	
28-8†	12			10	2				80	110	250	280	
28-09	9			5			4		110	250	260	280	Use 28A9
28-9†	12			6	6				80	110	250	280	
28A9	9			5			4		110	250	260	280	
28-10†	7				3	2	2		80	110	250	280	
28-11†★	22			18	4				80	110	250	280	
28-12†	26			26					90	180	270	–	
28-13‡	26			26					–	–	–	–	Position #12 of 28-12
28-14‡	11			11					80	110	250	280	
28-15†	35			35					80	110	250	280	
28-16‡	20			20					80	110	250	280	
28-17†	15			15					80	110	250	280	
28-18†	12			12					70	145	215	290	
28-19†	10			6	4				80	110	250	280	
28-20†★	14			4	10				80	110	250	280	
28-21†★	37			37					80	110	250	280	
28-22†	6			3			3		70	145	215	290	
28A29	29			27		2			80	110	250	280	
28A31	31		25			6			–	–	–	–	
28A35	35			35					80	110	250	280	
28-51	12				12				80	135	195	–	
28A55	29			29					–	–	–	–	
28-59	17			10	7				35	110	250	325	
28A63★	28			19	9				–	100	260	–	
28-72	72	72							72	144	216	288	
28-79	16			9		7			80	110	250	280	
28-84	9					9			–	–	–	–	
28-124	16			12		4			80	110	250	280	
32-1†★	5				3			2	80	110	250	280	
32A1	1								–	–	–	–	1 Size 4/0 Contact
32-2†	5			2			3		70	145	215	290	
32-3†★	9			4	2		2	1	80	110	250	280	
32 A3	3						3		22	44	75	–	
32-4‡	14			12	2				80	110	250	280	
32-5‡	2							2	35	110	250	325	
32-6†★	23			16	2	3	2		80	110	250	280	
32-7†★	35			28	7				80	125	235	280	
32-8‡	30			24	6				80	125	235	280	
32-9†	14			12			2		80	110	250	280	
32-10‡	7			3		2	2		80	110	250	280	
32-12‡	15			10	5				80	110	250	280	
32-013	13				13				65	130	230	295	Use 32A13
32-13†	23			18	5				80	110	250	280	
32A13	13				13				65	130	230	295	

† = Military designation per MIL-STD-1651
‡ = Military designation inactive for new design.
★ = VG95234

SPACECRAFT COMPONENTS CORP.
3040 Clayton Street
North Las Vegas, NV 89032
Phone: 702.851.7600
Fax: 702.851.7620
Email: salesinfo@spacecraft.com
Web: www.spacecraft.com

INSERT CONFIGURATIONS BY SHELL SIZE

PART NUMBER	CONTACTS								ALTERNATE POSITIONS (Degrees)				REMARKS
	TOTAL	SIZE											
		# 20	# 18	# 16	# 12	# 8	# 4	# 0	W	X	Y	Z	
32-14‡	7				5		2		35	110	250	325	
32-15†	8				6			2	35	110	250	280	
32-16‡	23			16	2	3	2		–	–	–	–	Position #12 of 32-6
32-17†	4						4		45	110	250	–	
32-18‡	14			12	2				–	–	–	–	Position #12 of 32-4
32-19‡	5				3			2	–	–	–	–	Position #2 of 32-1
32S19‡	19				19				–	–	–	–	
32-20‡★	23			16	2	3	2		–	–	–	–	Position #2 of 32-6
32-22†★	54			54					80	110	250	280	
32A22	22			20				2					
32B22	22			20				2	35	110	250	325	
32A25	25				25				60	120	–	–	
32A27	27			17	10				30	115	285	335	
32A29	23			16	2	3	2		–	–	–	–	Rotation of 32-6
32A30	30			20	10				–	–	–	–	
32-31	31			31					80	125	215	280	
32A40	40			40					35	130	–	–	
32A48	48			48					80	–	–	–	
32-52	8				6			2	–	–	–	–	90 Deg Rotation of 32-15
32-53	42			37	5				–	–	–	–	
32A55	55			55					80	110	250	280	
32-59	42			40		2			36	108	252	324	
32-63†	5						5		–	–	–	–	
32-64	54			54					–	–	–	–	
32-68	16			12			4		65	135	225	275	
32A69*	61	41		20					–	110	250	–	
32-73†	46			46					36	–	–	–	
32-76	19				19				80	110	250	280	
32-79	5					1	4		–	–	–	315	
32-88	54			54					80	110	250	280	
32A401	40			40					–	–	–	–	
32-689	9			6			3		–	–	–	–	
32-2010-29	23			16	2	3	2		–	–	–	–	Position #13 of 32-6
32-2010-30	5				3			2	–	–	–	–	Position #12 of 32-1
36-01	1								–	–	–	–	1 Size 4/0 Contact
36A1	1								–	–	–	–	1 Size 4/0 Contact
36-1‡	22			18	4				80	110	250	280	
36-2‡	5				2			3	–	–	–	–	
36-3†	6				3			3	70	145	215	290	
36-4‡	3							3	70	145	215	290	
36-5†★	4							4	–	120	240	–	
36-6†★	6						4	2	35	110	250	325	
36-7†	47			40	7				80	110	250	280	
36-8†	47			46	1				80	110	250	280	
36-9†	31			14	14	2	1		80	125	235	280	
36-10†★	48			48					80	125	235	280	
36-11‡	48			48					–	–	–	–	Position #12 of 36-10
36-12‡	48			48					–	–	–	–	Position #13 of 36-10
36-13‡	17			15	2				80	110	250	280	
36-14‡	16			6	5	5			90	180	270	–	
36-15†	35			35					60	125	245	305	
36-16‡	47			40	7				–	–	–	–	Position #12 of 36-7

† = Military designation per MIL-STD-1651
‡ = Military designation inactive for new design.
★ = VG95234

AS50151

INSERT CONFIGURATIONS BY SHELL SIZE

PART NUMBER	CONTACTS								ALTERNATE POSITIONS (Degrees)				REMARKS
	TOTAL	SIZE											
		# 20	# 18	# 16	# 12	# 8	# 4	# 0	W	X	Y	Z	
36-17‡	47			40	7				–	–	–	–	Position #13 of 36-7
36-18‡	31			14	14	2	1		–	–	–	–	Position #12 of 36-9
36-19‡	17			10	5		1	1	80	110	250	280	
36-20‡	34			30	2	2			–	–	–	–	
36-21‡	31			14	14	2	1		–	–	–	–	Position #2 of 36-9
36-22	22				22				80	110	250	280	
36A22	22				22				–	–	–	–	
36-35	36			32		4			–	–	–	–	
36-51	4						2	2	–	–	–	–	
36A51	6				1		2	3	45	135	225	315	
36-52†	52			52					72	144	216	288	
36-54	39			31		8			–	–	–	–	
36-66†	56			52	4				110	250	260	280	
36-71	53			50	3				–	–	–	–	
36A72	72		52	16	4				–	110	–	–	
36-74	44			43		1			–	–	–	–	
36B78	14			2		12			–	–	–	–	
36D78	14			4		10			–	–	–	–	
40-1†	30			24	6				65	130	235	300	
40-2†	23			23					80	110	250	280	
40S2	2								–	–	–	–	2 Each Size 4/0 Contacts
40-3†	23			18	4		1		80	110	250	280	
40A3	5				2			3	70	145	215	290	
40-4†	23			16	2	3	2		80	110	250	280	
40A4	6				2			4	50	120	240	325	
40B4	4							4	45	110	–	–	
40-5†	15				6	4	2	3	80	110	250	280	
40A5	5				1		1	3	33	–	–	270	
40-6†	26			24	1			1	80	110	250	280	
40A6	6				6				35	110	250	280	
40B5	5							5					
40-7†	22			18	2			2	80	110	250	280	
40A8	8			4			4		35	110	250	325	
40-9†	47			24	22	1			65	125	225	310	
40-10†	29			16		9	4		65	125	225	310	
40A10	8			4			4		80	135	195	–	
40-11†	25			18	4	1	1	1	80	110	250	280	
40-12‡	29			22	6			1	–	–	–	–	
40-13‡	23			23					–	–	–	–	Position #12 of 40-2
40-14‡	32			21	10			1	–	–	–	–	
40B19	19					19			35	105	255	325	
40A24	24				16	8			80	120	245	300	
40-26	26				19	7			80	110	250	280	
40A27	27				25		2		45	110	250	315	
40S27	60			60					–	–	–	–	
40-31	31				31				80	110	250	280	
40-35	35				35				70	130	230	290	
40B37	37				37								
40A38	38				38				37	74	285	322	
40-47	47			24	22	1			65	125	225	310	
40A51	31			16		15			–	–	–	–	
40-53	60			60					80	110	250	280	Same as 40A60

† = Military designation per MIL-STD-1651
‡ = Military designation inactive for new design.
★ = VG95234

SPACECRAFT COMPONENTS CORP.
3040 Clayton Street
North Las Vegas, NV 89032
Phone: 702.851.7600
Fax: 702.851.7620
Email: salesinfo@spacecraft.com
Web: www.spacecraft.com

INSERT CONFIGURATIONS BY SHELL SIZE

PART NUMBER	CONTACTS								ALTERNATE POSITIONS (Degrees)				REMARKS
	TOTAL	SIZE											
		# 20	# 18	# 16	# 12	# 8	# 4	# 0	W	X	Y	Z	
40-56†	85			85					72	144	216	288	
40A56	85			85					72	144	216	288	
40N56	85			85					72	144	216	288	
40-57	4							4	–	–	–	–	
40-60	6							6	80	110	250	280	
40A60	60			60					80	110	250	280	Same as 40-53
40-62	60			60					30	130	220	290	
40A62	62			60		2			80	130	230	280	
40-63	61			61					80	–	–	280	
40A65	65			65					70	145	215	285	
40-67	11			1			10		–	–	–	–	
40-68	21					21			–	–	–	–	
40-70	61			61					–	–	–	–	
40A75	75			73		2							
40-80	11			1			10		–	–	–	–	
40-82	62			62					–	–	–	–	
40-87	7						7		–	–	–	–	
40-150	150		150						–	–	–	–	
40A150	150		150						–	–	–	–	

† = Military designation per MIL-STD-1651
‡ = Military designation inactive for new design.
★ = VG95234

AS50151

INSERT CONFIGURATIONS BY NUMBER OF CONTACTS

FACE VIEW OF PIN INSERTS SHOWN APPROXIMATELY 3/4 ACTUAL SIZE

1 CONTACT

	8S-1†	10S-2†	12S-4†	12-5†	14-3†	14S-4‡	16-2†
CONTACTS	1-#16	1-#16	1-#16	1-#12	1-#8	1-#16	1-#12
RATING	A	A	D	D	A	D For new MIL equip. design, use 12S-4	E

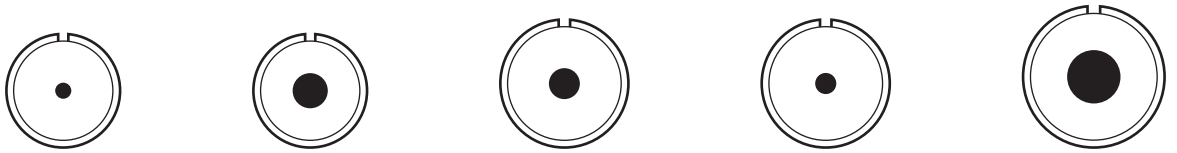

	16S-3†	16-12†	18-6†	18-7†	20-2†
CONTACTS	1-#16	1-#4	1-#4	1-#8	1-#0
RATING	B	A	D	B	D

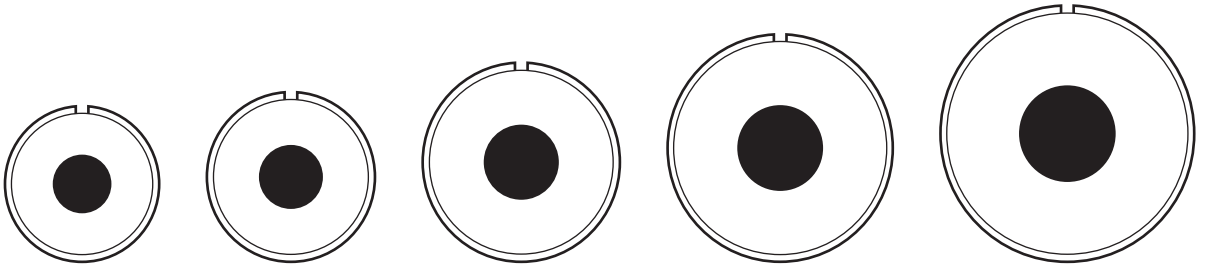

	22-7†	24-A1	28B1	32A1	36-01 36A1
CONTACTS	1-#0	1-#0	1-#0	1-4/0	1-#4/0
RATING	E	B	E	A	C

2 CONTACTS

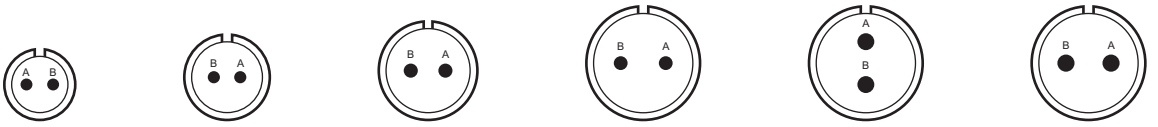

	10SL-4‡	12S-3†	14S-9‡	16S-4†	16-11† 16A11★	16-13†
CONTACTS	2-#16	2-#16	2-#16	2-#16	2-#12	2-#12 Thermocouple
RATING	A	A	A For new MIL equip. design, use 12S-3	D	A	A

† = Military designation per MIL-STD-1651. ‡ = Military designation inactive for new design. ★ = VG95234

SPACECRAFT COMPONENTS CORP.
3040 Clayton Street
North Las Vegas, NV 89032
Phone: 702.851.7600
Fax: 702.851.7620
Email: salesinfo@spacecraft.com
Web: www.spacecraft.com

INSERT CONFIGURATIONS BY NUMBER OF CONTACTS

FACE VIEW OF PIN INSERTS SHOWN APPROXIMATELY 3/4 ACTUAL SIZE

2 CONTACTS (CONT.)

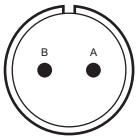

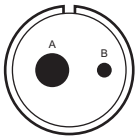

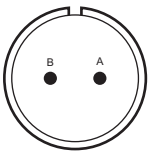

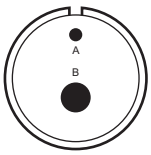

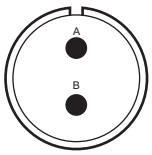

	18-3‡	18-14†	20-5‡	20-12‡	20-23‡
CONTACTS	2-#12	1-#4 (A) 1-#16 (B)	2-#16	1-#16 (A) 1-#4 (B)	2-#8
RATING	**D** For new MIL equip. design, use 18-5	**A**	**E**	**A** For new MIL equip. design, use 18-14	**A** For new MIL equip. design, use 20-22

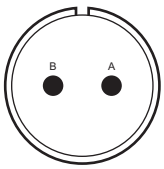

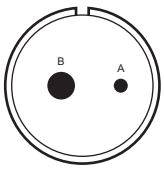

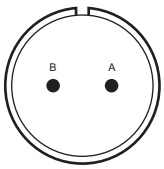

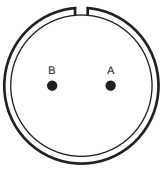

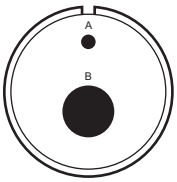

	22-1‡	22-3‡	22-8‡	22-11†	24-1‡
CONTACTS	2-#8	1-#16 (A) 1-#4 (B)	2-#12	2-#16	1-#12 (A) 1-#0 (B)
RATING	**D** For new MIL equip. design, use 22-2	**D**	**E** For new MIL equip. design, use 22-9	**B**	**D**

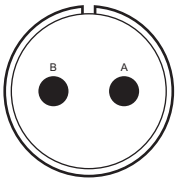

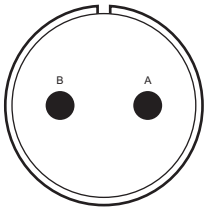

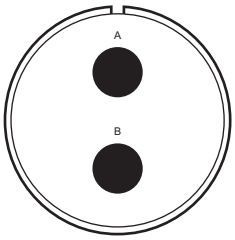

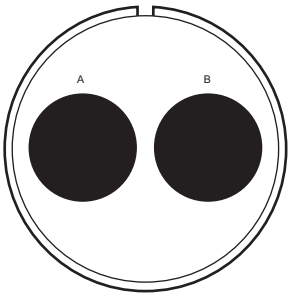

	24-9‡	28-7‡	32-5‡	40S2
CONTACTS	2-#4	2-#4	2-#0	2-#4/0
RATING	**A** For new MIL equip. design, use 24-12	**D** For new MIL equip. design, use 28-5	**D** For new MIL equip. design, use 32-1	**A**

† = Military designation per MIL-STD-1651. ‡ = Military designation inactive for new design. ★= VG95234

AS50151

INSERT CONFIGURATIONS BY NUMBER OF CONTACTS

FACE VIEW OF PIN INSERTS SHOWN APPROXIMATELY 3/4 ACTUAL SIZE

3 CONTACTS

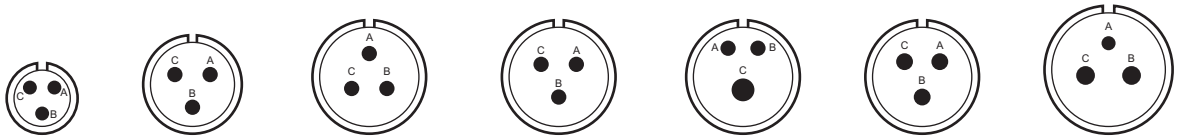

	10SL-3†	14S-1‡ 14S-7†	16S-5‡	16S-6‡	16-7†	16-10†	18-5†
CONTACTS	3-#16	3-#16	3-#16	3-#16	2-#16 (A, B) 1-#8 (C)	3-#12	1-#16 (A) 2-#12 (B, C)
RATING	**A**	**A**	**A** For new MIL equip. design, use 14S-7	**A** For new MIL equip. design, use 14S-7	**A**	**A**	**D**

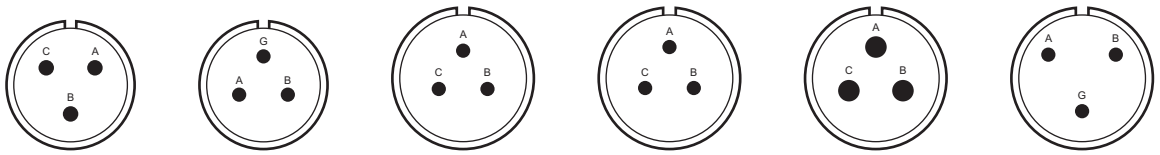

	18-21‡	18-22‡	20-3‡	20-6‡	20-19‡	20-26‡
CONTACTS	3-#12	3-#16	3-#12	3-#16	3-#8	3-#12
RATING	**A**	**D** For new MIL equip. design, use 18-4	**D** For new MIL equip. design, use 20-4	**D** For new MIL equip. design, use 18-4	**A** For new MIL equip. design, use 20-22	**A**

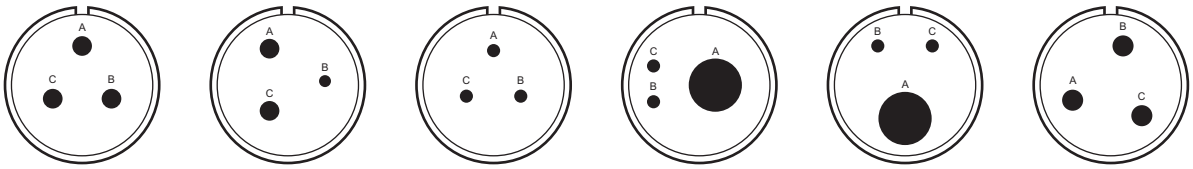

	22-2†	22-6‡	22-9†	22-21†	22-25‡	22-35‡
CONTACTS	3-#8	1-#16 (B) 2-#8 (A, C)	3-#12	2-#16 (B, C) 1-#0 (A)	2-#16 (B, C) 1-#0 (A)	3-#8
RATING	**D**	**D** For new MIL equip. design, use 22-12	**E**	**A**	**A**	**D**

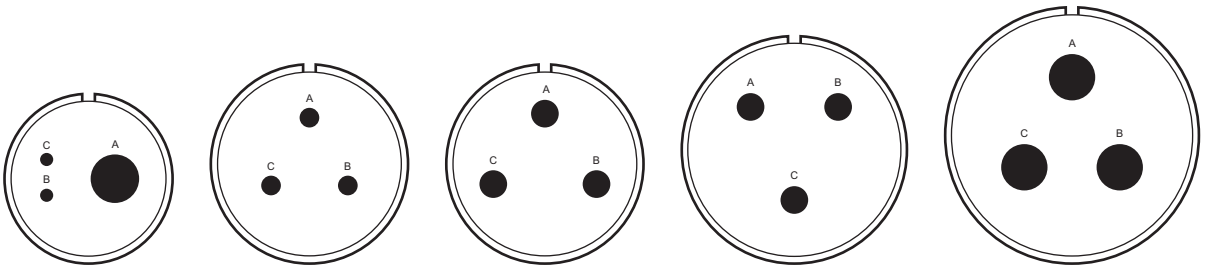

	24-14‡	28-3†	28-6‡	32A3	36-4‡
CONTACTS	2-#12 (B, C) 1-#0 (A)	3-#8	3-#4	3-#4	3-#0
RATING	**A**	**E**	**D** For new MIL equip. design, use 28-22	**E**	**D** (A); **A** (balance) For new MIL equip. design, use 36-3

† = Military designation per MIL-STD-1651. ‡ = Military designation inactive for new design. ★= VG95234

SPACECRAFT COMPONENTS CORP.
3040 Clayton Street
North Las Vegas, NV 89032
Phone: 702.851.7600
Fax: 702.851.7620
Email: salesinfo@spacecraft.com
Web: www.spacecraft.com

INSERT CONFIGURATIONS BY NUMBER OF CONTACTS

FACE VIEW OF PIN INSERTS SHOWN APPROXIMATELY 3/4 ACTUAL SIZE

4 CONTACTS

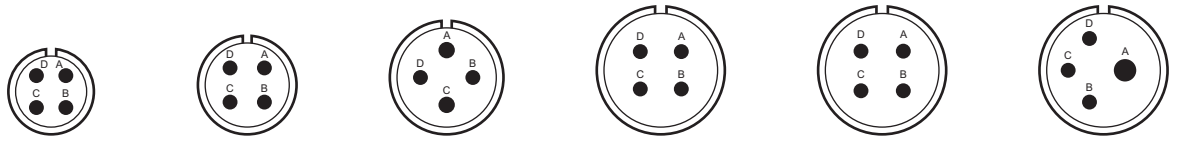

	12SA10 12S-2002-10	14S-2†	16-9†	18-4†	18-10‡	18-13†
CONTACTS	4-#16	4-#16	2-#16 (B, D) 2-#12 (A, C)	4-#16	4-#12	3-#12 (B, C, D) 1-#8 (A)
RATING	**A**	**INST.**	**A**	**D**	**A** For new MIL equip. design, use 18-11	**A**

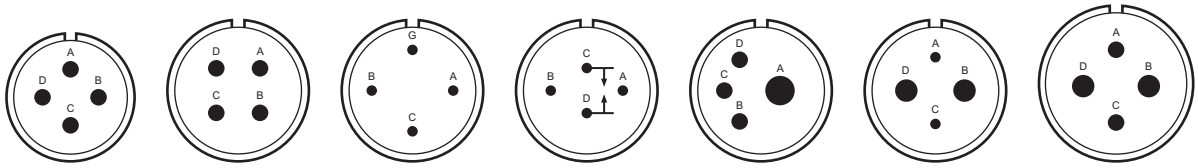

	18-15†	20-4†	20-10†	20-13†	20-20‡	20-24‡	22-4‡
CONTACTS	4-#12 Thermocouple	4-#12	4-#16	4-#16	3-#12 (B, C, D) 1-#4 (A)	2-#16 (A, C) 2-#8 (B, D)	2-#12 (A, C) 2-#8 (B, D)
RATING	**A**	**D**	**A**	**A**	**A**	**A**	**A** For new MIL equip. design, use 20-14

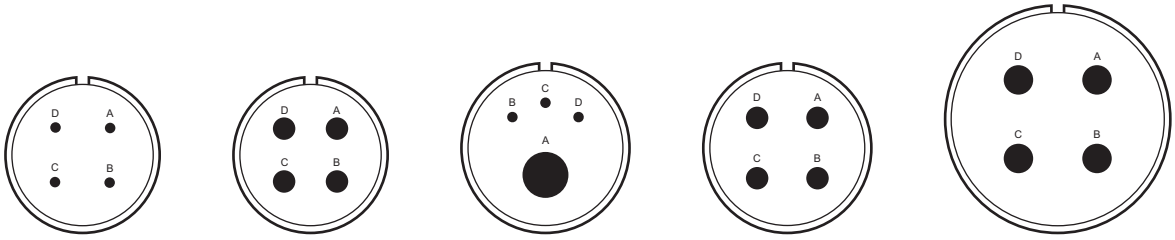

	22-10†	22-22† 22B22★	24-4†	24-22†	32-17†
CONTACTS	4-#16	4-#8	3-#16 (B, C, D) 1-#0 (A)	4-#8	4-#4
RATING	**E**	**A**	**A**	**D**	**D**

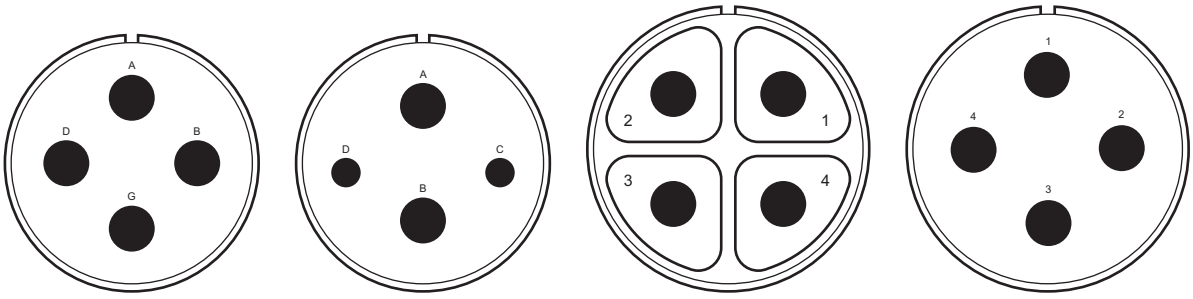

	36-5†	36-51	40B4	40-57
CONTACTS	4-#0	2-#4 (C, D) 2-#0 (A, B)	4-#0	4-#0
RATING	**A**	**D**	**E**	**E**

† = Military designation per MIL-STD-1651. ‡ = Military designation inactive for new design. ★ = VG95234

AS50151

INSERT CONFIGURATIONS BY NUMBER OF CONTACTS

FACE VIEW OF PIN INSERTS SHOWN APPROXIMATELY 3/4 ACTUAL SIZE

5 CONTACTS

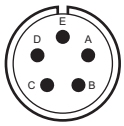

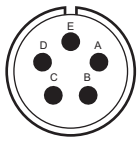

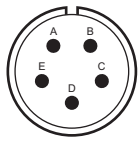

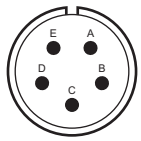

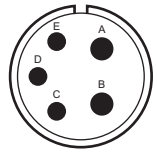

	14S-5†	16S-8‡	18-11†	18-20‡	18-29‡	20-14†
CONTACTS	5-#16	5-#16	5-#12	5-#16	5-#16	3-#12 (C, D, E) 2-#8 (A, B)
RATING	**INST.**	**A**	**A**	**A** For new MIL equip. design, use 16S-8	**A**	**A**

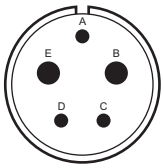

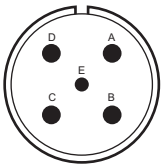

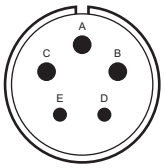

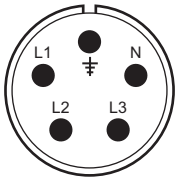

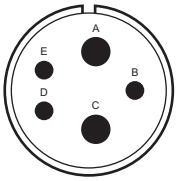

	22-12†	22-13‡	22-34‡	24-G5	24-12†
CONTACTS	3-#16 (A, C, D) 2-#8 (B, E)	1-#16 (E) 4-#12 (A-D)	2-#16 (D, E) 3-#12 (A, B, C)	5-#8 Top pin is grounded	3-#12 (B, D, E) 2-#4 (A, C)
RATING	**D**	**A** (A, D); **D** (E) For new MIL equip. design, use 22-15	**D**	**A**	**A**

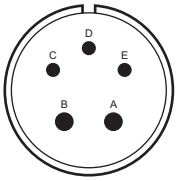

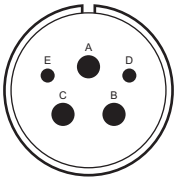

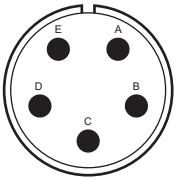

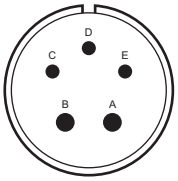

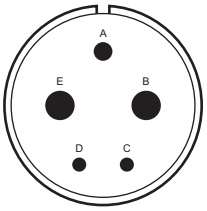

	24-17‡	24-23‡	24-79	24-620	28-5†
CONTACTS	3-#16 (C, D, E) 2-#12 (A, B)	2-#16 (D, E) 3-#8 (A, B, C)	5-#8	3-#16 (C, D, E) 2-#12 (A, B)	2-#16 (C, D) 1-#12 (A) 2-#4 (B, E)
RATING	**D** For new MIL equip. design, use 22-5	**D**	**A**		**D**

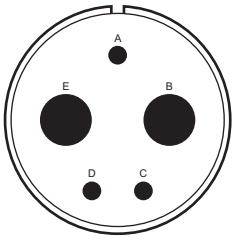

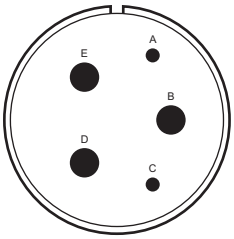

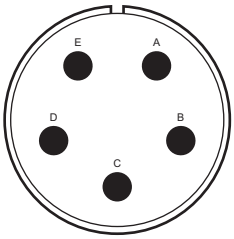

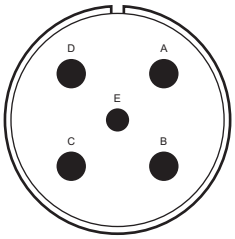

	32-1†	32-2†	32-63†	32-79
CONTACTS	3-#12 (A, C, D) 2-#1/0 (B, E)	2-#16 (A, C) 3-#4 (B, D, E)	5-#4	1-#8 (E) 4-#4 (A-D)
RATING	**E** (A); **D** (balance)	**E**	**D**	**D**

† = Military designation per MIL-STD-1651. ‡ = Military designation inactive for new design. ★= VG95234

SPACECRAFT COMPONENTS CORP.
3040 Clayton Street
North Las Vegas, NV 89032
Phone: 702.851.7600
Fax: 702.851.7620
Email: salesinfo@spacecraft.com
Web: www.spacecraft.com

INSERT CONFIGURATIONS BY NUMBER OF CONTACTS

FACE VIEW OF PIN INSERTS SHOWN APPROXIMATELY 3/4 ACTUAL SIZE

5 CONTACTS (CONT.)

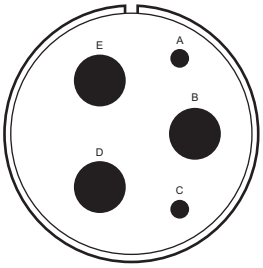

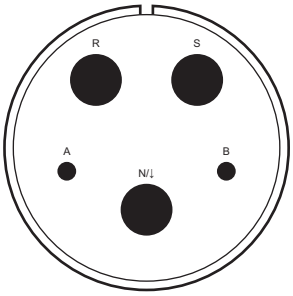

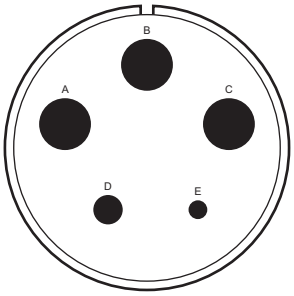

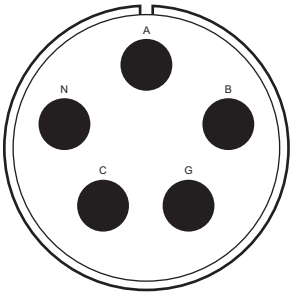

	36-2‡	40A3	40A5	40B5
CONTACTS	2-#12 (A, C) 3-#0 (B, D, E)	2-#12 (A,D) 3-#0 (N,R,S)	1-#12 (E) 1-#4 (D) 3-#0 (A, B, C)	5-#0
RATING	**D** For new MIL equip. design, use 36-3	**D**	**D**	**D**

6 CONTACTS

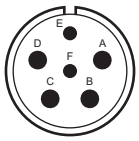

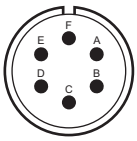

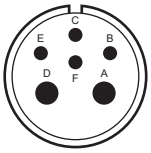

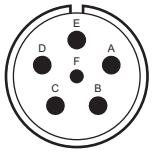

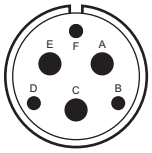

	14S-6†	18A6 18-06	18-12†	20-8†	20-17†	20-22†
CONTACTS	6-#16	2-#16 (E, F) 4-#12 (A-D)	6-#16	4-#16 (B, C, E, F) 2-#8 (A, D)	1-#16 (F) 5-#12 (A-E)	3-#16 (B, D, F) 3-#8 (A, C, E)
RATING	**INST.**	**A**	**A** For new MIL equip. design, use 16S-1	**INST.**	**A**	**A**

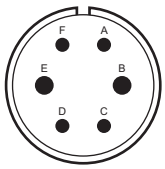

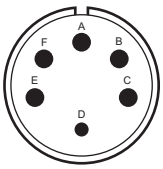

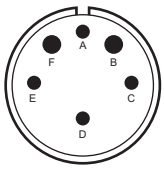

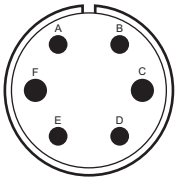

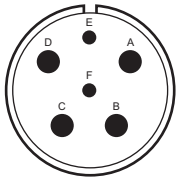

	22-5†	22-15†	22-24†	24A-6	24-06 24C06
CONTACTS	4-#16 (A,C,D,F) 2-#12 (B,E)	1-#16 (D) 5-#12 (A, B, C, E, F)	4-#16 (A, C, D, E) 2-#12 (B, F)	2-#8 (F, C) 4-#12 (A, B, E, D)	2-#16 (E, F) 4-#8 (A, B, C, D)
RATING	**A** (A, B, C, E, F)	**A** (A, B, C, E, F) **E** (D)	**A** (A, B, F); **D** (C, D, E) For new MIL equip. design, use 22-5	**D**	**D**

† = Military designation per MIL-STD-1651. ‡ = Military designation inactive for new design. ★= VG95234

AS50151

INSERT CONFIGURATIONS BY NUMBER OF CONTACTS

FACE VIEW OF PIN INSERTS SHOWN APPROXIMATELY 3/4 ACTUAL SIZE

6 CONTACTS (CONT.)

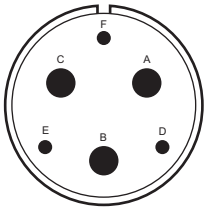

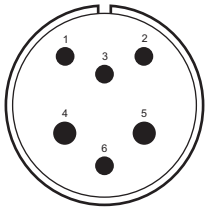

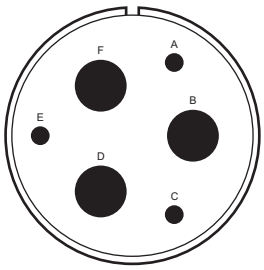

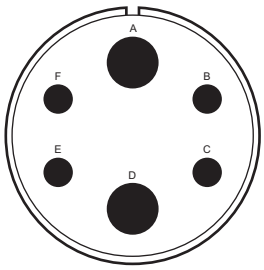

	28-22†	28-82‡	36-3†	36-6†
CONTACTS	3-#16 (D, E, F) 3-#4 (A, B, C)	4-#12 (1, 2, 3, 6) 2-#8 (4, 5)	3-#12 (A, C, E) 3-#0 (B, D, F)	4-#4 (B, C, E, F) 2-#0 (A, D)
RATING	D	D	D	A

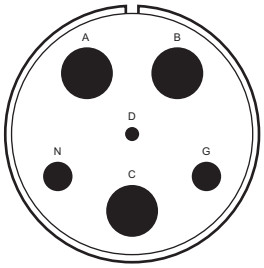

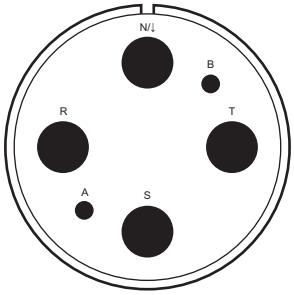

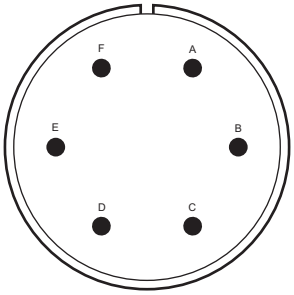

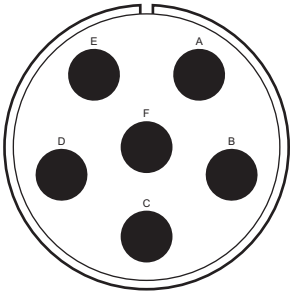

	36A51	40A4	40-A6	40-60
CONTACTS	1-#16 (D) 2-#4 (G, N) 3-#0 (A, B, C)	2-#12 (A, B) 4-#0 (N, R, S, T)	6-#12	6-#0
RATING	D	A	B	A

7 CONTACTS

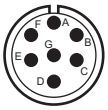

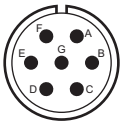

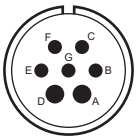

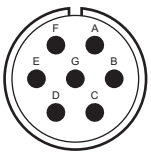

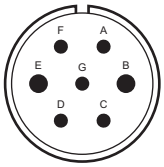

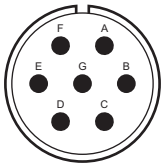

	14SA7 14S-07	16S-1†	18-9‡	20-15‡	22-26‡	22-28‡
CONTACTS	7-#16	7-#16	5-#16 (B, C, E, F, G) 2-#12 (A, D)	7-#12	5-#16 (A, C, D, F, G) 2-#12 (B, E)	7-#12
RATING	INST.	A	INST.	A		A For new MIL equip. design, use 22-33

† = Military designation per MIL-STD-1651. ‡ = Military designation inactive for new design. ★= VG95234

SPACECRAFT COMPONENTS CORP.
3040 Clayton Street
North Las Vegas, NV 89032
Phone: 702.851.7600
Fax: 702.851.7620
Email: salesinfo@spacecraft.com
Web: www.spacecraft.com

INSERT CONFIGURATIONS BY NUMBER OF CONTACTS

FACE VIEW OF PIN INSERTS SHOWN APPROXIMATELY 3/4 ACTUAL SIZE

7 CONTACTS (CONT.)

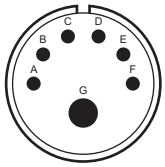

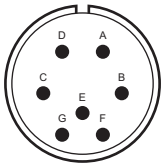

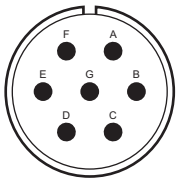

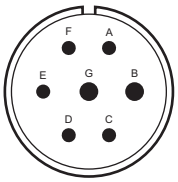

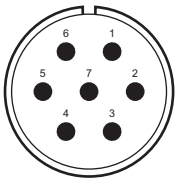

	22-29‡	22-33‡	24-2†	24-3‡	24A7 24-07
CONTACTS	6-#16 (A, B, C, D, E, F) 1-#4 (G)	7-#16	7-#12	5-#16 (A, C-F) 2-#12 (B, G)	7-#12
RATING	**A**	**A** (E-G); **D** (A-D)	**D**	**D** For new MIL equip. design, use 24-20	**D**

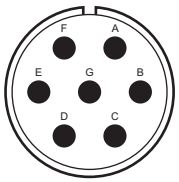

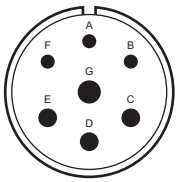

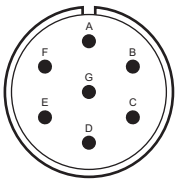

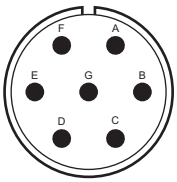

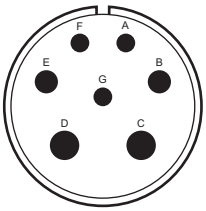

	24-10†	24-16†	24-27†	24-66	28-10†
CONTACTS	7-#8	3-#16 (A, B, F) 3-#12 (C, D, E) 1-#8 (G)	7-#16	7-#12	3-#12 (A, F, G) 2-#8 (B, E) 2-#4 (C, D)
RATING	**A**	**A** (C-E); **D** (A, B, F, G)	**E**	**A**	**D** (G); **A** (balance)

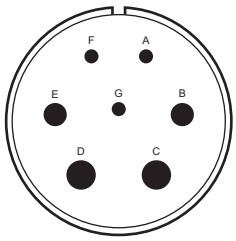

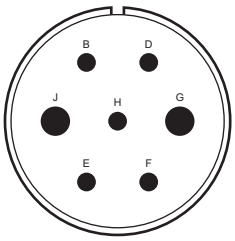

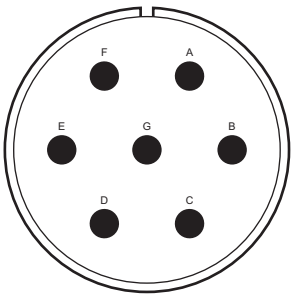

	32-10‡	32-14	40-87
CONTACTS	3-#16 (A, F, G) 2-#8 (B, E) 2-#4 (C, D)	5-#12 (B, D, E, F, H) 2-#4 (G, J)	7-#4
RATING	**A** (C, D); **B** (G) **D** (B, E); **E** (A, F)	**D**	**D**

† = Military designation per MIL-STD-1651. ‡ = Military designation inactive for new design. ★ = VG95234

AS50151

INSERT CONFIGURATIONS BY NUMBER OF CONTACTS

FACE VIEW OF PIN INSERTS SHOWN APPROXIMATELY 3/4 ACTUAL SIZE

8 CONTACTS

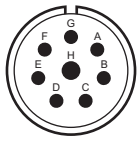

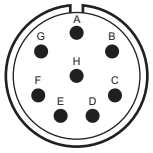

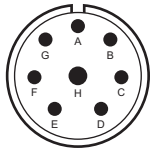

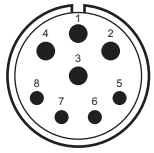

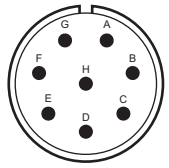

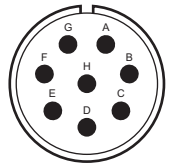

	18-8‡	20-7‡	20-9‡	20-B8	22-18‡	22-23‡
CONTACTS	7-#16 (A-G) 1-#12 (H)	8-#16	7-#16 (A-G) 1-#12 (H)	4-#16 (5-8) 4-#12 (1-4)	8-#16	8-#12
RATING	**A**	**A** (C-F) **D** (A, B, G, H)	**A** (A-G); **D** (H)	**A**	**A** (C-E) **D** (balance)	**D** (H); **A** (balance)

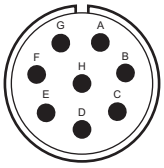

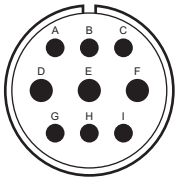

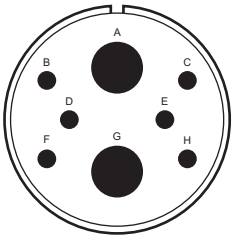

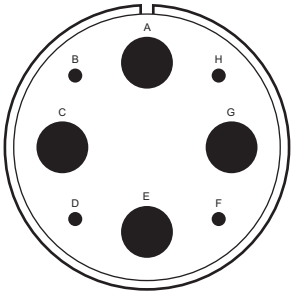

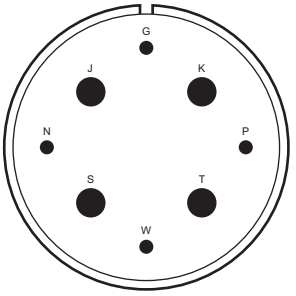

	22-36‡	24-6†	32-15†	40A8	40A10
CONTACTS	8-#12 Thermocouple	8-#12	6-#12 (B, F, H) 2-#0 (A, G)	4-#16 (B,D,F,H) 4-#0 (A,C,E,G)	4-#16 (G, N, P, W) 4-#4 (J, K, S, T)
RATING	**A** (A-G); **D** (H)	**D** (A, G, H) **A** (balance)	**D**	**E**	**D**

9 CONTACTS

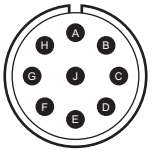

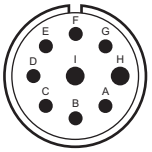

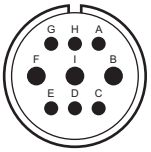

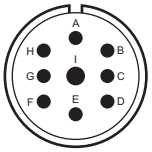

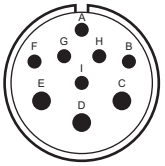

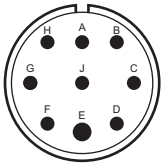

	20A9	20-16†	20-18†	20-21†	22-16†	22-17†
CONTACTS	9-#12	7-#16 (A-G) 2-#12 (H, I)	6-#16 (A, C, D, E, G, H) 3-#12 (B, F, I)	8-#16 (A-H) 1-#12 (I)	6-#16 (A, B, F-J) 3-#12 (C, D, E)	8-#16 (A-D, F-J) 1-#12 (E)
RATING	**D** (J) **A** (balance)	**A**	**A**	**A**	**A** For new MIL equip. design, use 20-18	**D** (A); **A** (balance)

† = Military designation per MIL-STD-1651. ‡ = Military designation inactive for new design. ★= VG95234

SPACECRAFT COMPONENTS CORP.
3040 Clayton Street
North Las Vegas, NV 89032
Phone: 702.851.7600
Fax: 702.851.7620
Email: salesinfo@spacecraft.com
Web: www.spacecraft.com

INSERT CONFIGURATIONS BY NUMBER OF CONTACTS

FACE VIEW OF PIN INSERTS SHOWN APPROXIMATELY 3/4 ACTUAL SIZE

9 CONTACTS (CONT.)

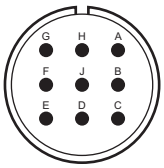

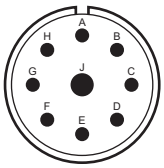

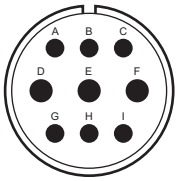

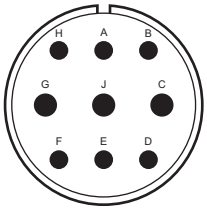

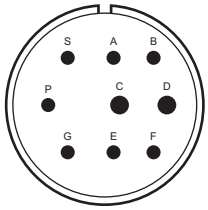

	22-20‡	22-27†	24-11†	28-1†	28-4†
CONTACTS	9-#16	8-#16 (A-H) 1-#8 (J)	6-#12 (A-C, G-I) 3-#8 (D, E, F)	6-#12 (A, B, D, E, F, H) 3-#8 (C, J, G)	7-#16 (A, B, E, F, G, P, S) 2-#12 (C, D)
RATING	**A** For new MIL equip. design, use 20-33	**D** (J); **A** (balance)	**A**	**D** (A, E, J) **A** (balance)	**E** (G, P, S) **D** (balance)

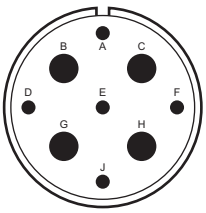

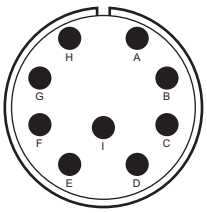

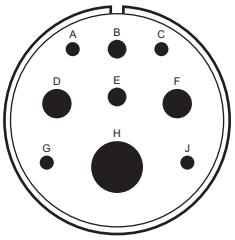

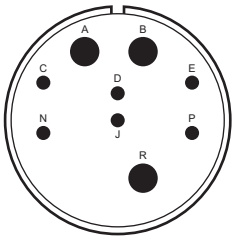

	28A9 28-09	28-84	32-3†	32-689
CONTACTS	5-#16 (A,D,E,F,J) 4-#4 (B,C,G,H)	9-#8	4-#16 (A, C, G, J) 2#12 (B, E) 2-#4 (D, F), 1-#0 (H)	6-#16 (C,D,E,J,N,P) 3-#4 (A,B,R)
RATING	**A**	**A**	**D**	**A**

10 CONTACTS

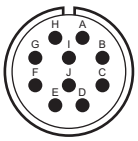

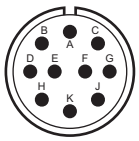

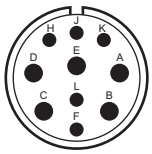

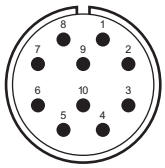

	16A10	18-1†	18-19‡	20-58	22A10
CONTACTS	10-#18	10-#16	10-#16	5-#16 (F-L) 5-#12 (A-E)	10-#16
RATING	**A**	**A** (B, C, F, G) **INST.** (balance)	**A** For new MIL equip. design, use 18-1	**A**	**A**

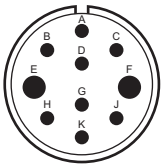

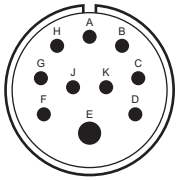

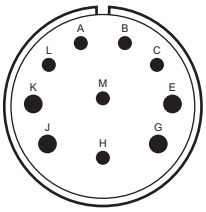

	22-82	24-21†	28-19 †
CONTACTS	8-#16 (A-D,G-K) 2-#8 (E,F)	9-#16 (A-D, F-K) 1-#8 (E)	6-#16 (A, B, C, H, L, M) 4-#12 (E, G, J, K)
RATING	**A**	**D**	**A** (C, E, G, J, K, L) **B** (H, M); **D** (A, B)

† = Military designation per MIL-STD-1651. ‡ = Military designation inactive for new design. ★= VG95234

AS50151

INSERT CONFIGURATIONS BY NUMBER OF CONTACTS

FACE VIEW OF PIN INSERTS SHOWN APPROXIMATELY 3/4 ACTUAL SIZE

11 CONTACTS

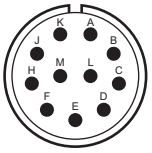

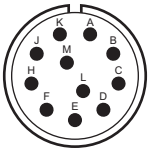

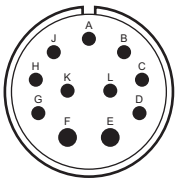

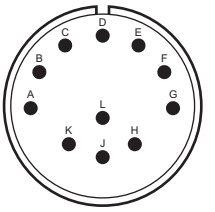

	20-31‡	20-33†	24-20†	28-14‡
CONTACTS	11-#16	11-#16	9-#16 (A-D, G-L) 2-#12 (E, F)	11-#16
RATING	**A**	**A**	**D** For new MIL equip. design, use 28-2	**D**

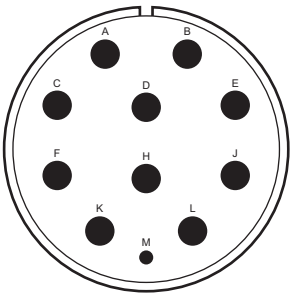

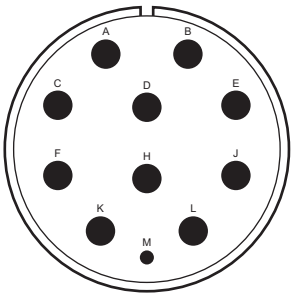

12 CONTACTS

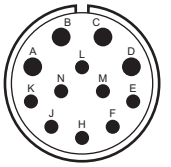

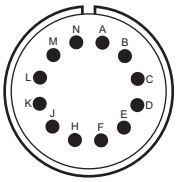

	40-67	40-80	22-63	24-19‡
CONTACTS	1-#16 (M) 10-#4 (A-L)	1-#16 (M) 10-#4 (A-L)	8-#16 (E-L) 4-#12 (A-D)	12-#16
RATING	**A**	**A**	**A**	**A**

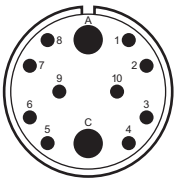

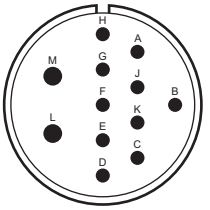

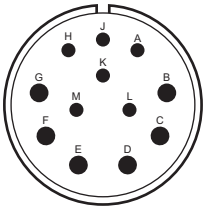

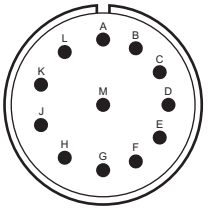

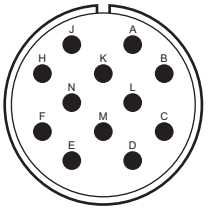

	24S12	28-8†	28-9†	28-18†	28-51
CONTACTS	10-#16 (1-10) 2-#4 (A,C)	10-#16 (A-K) 2-#12 (L, M)	6-#16 (A, H, M) 6-#12 (B-G)	12-#16	12-#12
RATING	**A**	**D** (B); **E** (L, M) **A** (balance)	**D**	**A** (A, B); **C** (M) **D** (G, L); **INST.** (C-F)	**A**

† = Military designation per MIL-STD-1651. ‡ = Military designation inactive for new design. ★= VG95234

SPACECRAFT COMPONENTS CORP.
3040 Clayton Street
North Las Vegas, NV 89032
Phone: 702.851.7600
Fax: 702.851.7620
Email: salesinfo@spacecraft.com
Web: www.spacecraft.com

INSERT CONFIGURATIONS BY NUMBER OF CONTACTS

FACE VIEW OF PIN INSERTS SHOWN APPROXIMATELY 3/4 ACTUAL SIZE

13 CONTACTS

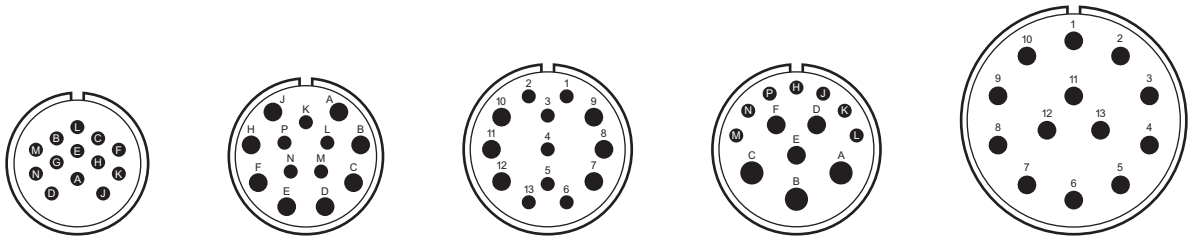

	20-11†	22-70	24A13 24-013	24-58	32A13 32-013
CONTACTS	13-#16	5-#16 (K-P) 8-#12 (A-J)	7-#16 (1-6, 13) 6-#12 (7-12)	7-#16 (H-P) 3-#12 (D, E, F); 3-#8 (A, B, C)	13-#12
RATING	**INST.**		**A**		**D**

14 CONTACTS

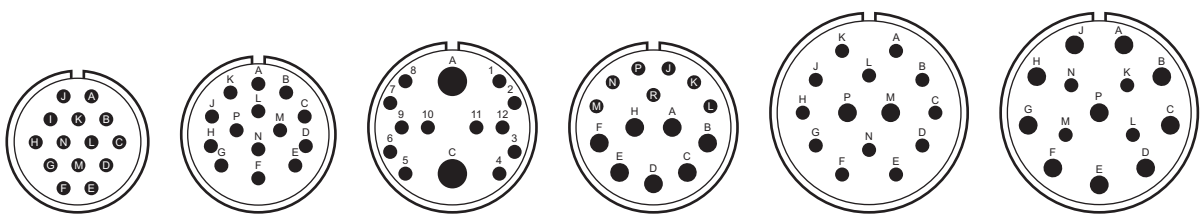

	20-27†	22-19†	24S14	24-59	28-2†	28-20†
CONTACTS	14-#16	14-#16	12-#16 (1-12) 2-#4 (A,C)	7-#16 (J-R) 7-#12 (A-H)	12-#16 (A, L, N) 2-#12 (M, P)	4-#16 (K-N) 10-#12 (A-J,P)
RATING	**A**	**A**	**A**	**A**	**D**	**A**

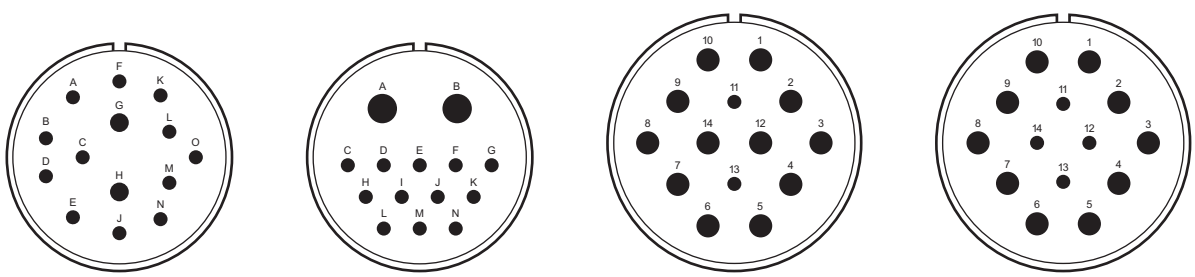

	32-4‡	32-9‡	36B78	36D78
CONTACTS	12-#16 (A-F, J-O) 2-#12 (G, H)	12-#16 (C-N) 2-#4 (A, B)	2-#16 (11, 13) 12-#8 (1-10,12,14,)	4-#16 (11-14) 10-#8 (1-10)
RATING	**A** (F, J, K, N,) **D** (balance)	**D** For new MIL equip. design, use 28-2	**D**	**D**

† = Military designation per MIL-STD-1651. ‡ = Military designation inactive for new design. ★= VG95234

3040 Clayton Street
North Las Vegas, NV 89032
Phone: 702.851.7600
Fax: 702.851.7620
Email: salesinfo@spacecraft.com
Web: www.spacecraft.com
SPACECRAFT COMPONENTS CORP.

AS50151

INSERT CONFIGURATIONS BY NUMBER OF CONTACTS

FACE VIEW OF PIN INSERTS SHOWN APPROXIMATELY 3/4 ACTUAL SIZE

15 CONTACTS

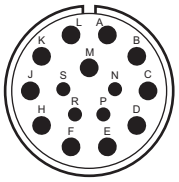

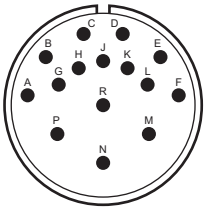

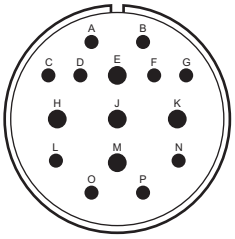

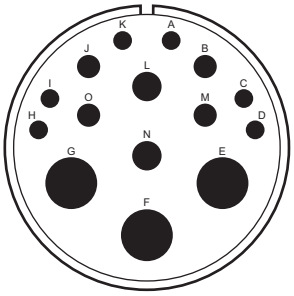

	24-65	28-17†	32-12‡	40-5†
CONTACTS	4-#16 (N-S) 11-#12 (A-M)	15-#16	10-#16 (A-D, F, G, L, N-P) 5-#12 (E, H, J, K, M)	6-#12 (C, D, H, I, K) 4-#8 (B, J, M, O) 2-#4(L, N), 3-#0 (E, F, G)
RATING	**A**	**A** (A-L); **B** (R) **D** (M-P)	**A** (C-G); **D** (balance) For new MIL equip. design, use 32-13	**D**

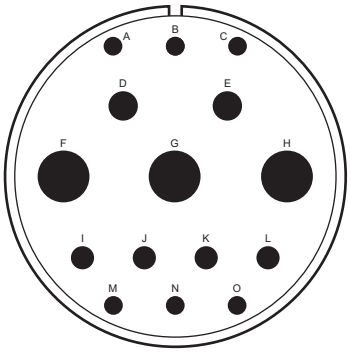

16 CONTACTS

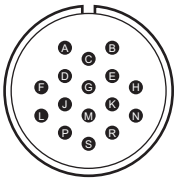

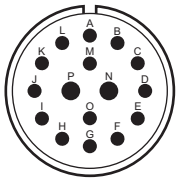

	48-1†	24-5‡	24-7†
CONTACTS	6-#12 (A-C, M-O) 4-#8 (I-L), 2-#4 (D,E) 3-#0 (F-H)	16-#16	14-#16 (A-M,O) 2-#12 (N,P)
RATING	**E** (B, N); **D** (balance)	**A** For new MIL equip. design, use 22-14	**A**

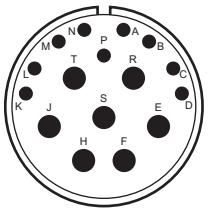

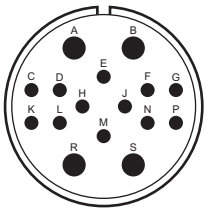

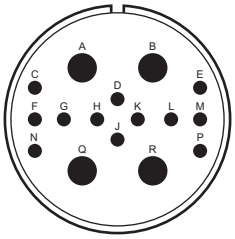

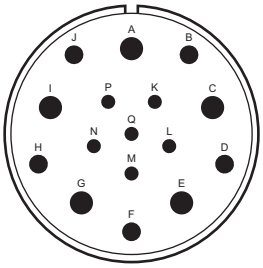

	28-79	28-124	32-68	36-14 ‡
CONTACTS	9-#16 (A-D, K-P) 7-#8 (J, R, S, T)	12-#16 (C-P) 4-#8, (A,B,R,S)	12-#16 (C-P) 4-#4, (A,B,Q,R)	6-#16 (K-Q) 5-#12 (B, D, F, H, J) 5-#8 (A, C, E, G, I)
RATING	**A**	**A**	**A**	**D**

† = Military designation per MIL-STD-1651. ‡ = Military designation inactive for new design. ★= VG95234

SPACECRAFT COMPONENTS CORP.
3040 Clayton Street
North Las Vegas, NV 89032
Phone: 702.851.7600
Fax: 702.851.7620
Email: salesinfo@spacecraft.com
Web: www.spacecraft.com

INSERT CONFIGURATIONS BY NUMBER OF CONTACTS

FACE VIEW OF PIN INSERTS SHOWN APPROXIMATELY 3/4 ACTUAL SIZE

17 CONTACTS

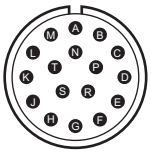

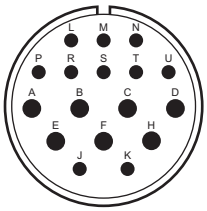

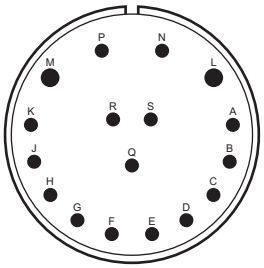

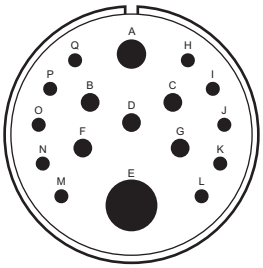

	20-29‡	28-59	36-13‡	36-19‡
CONTACTS	17-#16	10-#16 (J-U) 7-#12 (A-H)	15-#16 (A-K, N-S) 2-#12 (L, M)	10-#16 (H-Q) 5-#12 (B-D,F, G) 1-#4 (A), 1-#0 (E)
RATING	**A**	**A**	**E** (N-Q); **A** (balance)	**D**

19 CONTACTS

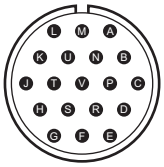

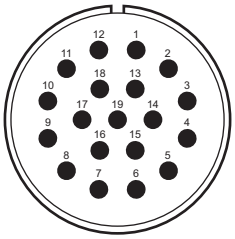

	20A48	22-14‡	24-67	32S19
CONTACTS	19-#16	19-#16	19-#12	19-#12
RATING	**I**	**A**	**INST.**	**A**

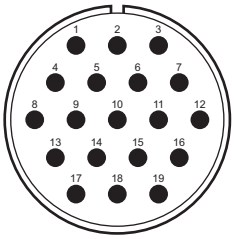

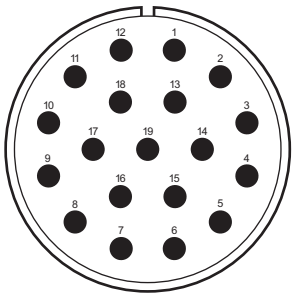

20 CONTACTS

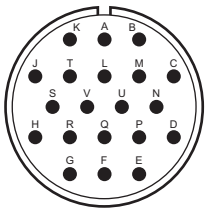

	32-76	40B19	28-16‡
CONTACTS	19-#12	19-#8	20-#16
RATING	**A**	**A**	**A** For new MIL equip. design, use 28-12

† = Military designation per MIL-STD-1651. ‡ = Military designation inactive for new design. ★= VG95234

3040 Clayton Street
North Las Vegas, NV 89032
Phone: 702.851.7600
Fax: 702.851.7620
Email: salesinfo@spacecraft.com
Web: www.spacecraft.com
SPACECRAFT COMPONENTS CORP.

AS50151

INSERT CONFIGURATIONS BY NUMBER OF CONTACTS

FACE VIEW OF PIN INSERTS SHOWN APPROXIMATELY 3/4 ACTUAL SIZE

21 CONTACTS

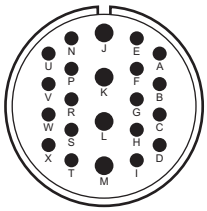

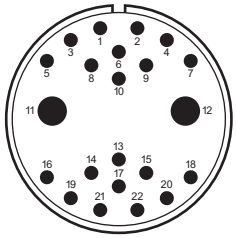

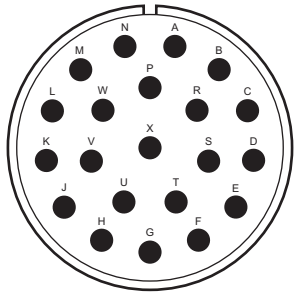

	28-11†	32B22	40-68
CONTACTS	18-#16 (A-I, N-X) 4-#12 (J-M)	20-#16 (1-10,13-22) 2-#4 (11,12)	21-#8
RATING	**A**	**A**	**A**

22 CONTACTS

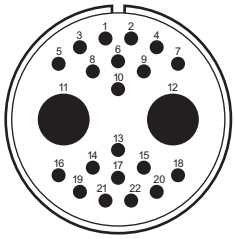

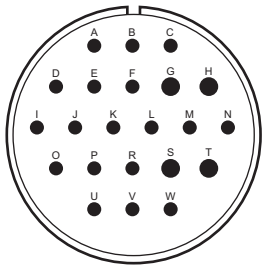

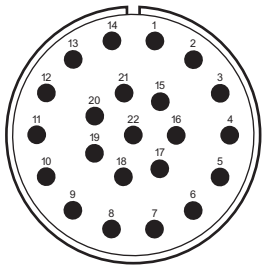

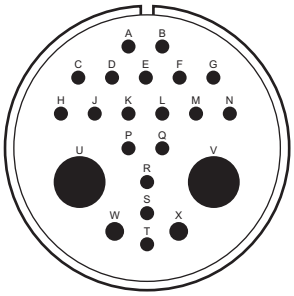

	32A22	36-1‡	36-22 36A22	40-7†
CONTACTS	20-#16 2-#0	18-#16 (A-F, I-R, U-W) 4-#12 (G, H, S, T)	22-#12	18-#16 (A-T), 2-#12 (W, X) 2-#0 (U, V)
RATING	**A**	**D** For new MIL equip. design, use 32-13	**D**	**A** (P, Q, U-X); **D** (balance)

23 CONTACTS

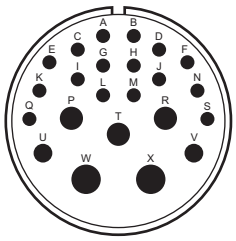

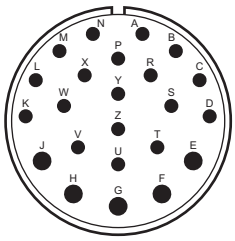

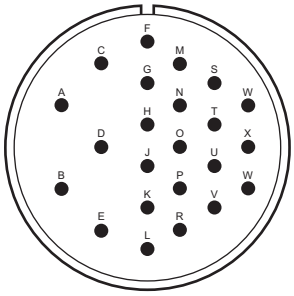

	24-80†	32-6†	32-13†	40-2†
CONTACTS	23-#16	16-#16 (A-O, S) 2-#12 (U,V) 3-#8 (P-T), 2-#4 (W, X)	18-#16 (A-D, K-Z) 5-#12 (E-J)	23-#16
RATING	**INST.**	**A**	**D**	**B** (A-E); **D** (balance)

† = Military designation per MIL-STD-1651. ‡ = Military designation inactive for new design. ★= VG95234

SPACECRAFT COMPONENTS CORP.
3040 Clayton Street
North Las Vegas, NV 89032
Phone: 702.851.7600
Fax: 702.851.7620
Email: salesinfo@spacecraft.com
Web: www.spacecraft.com

INSERT CONFIGURATIONS BY NUMBER OF CONTACTS

FACE VIEW OF PIN INSERTS SHOWN APPROXIMATELY 3/4 ACTUAL SIZE

23 CONTACTS CONT. / 24 CONTACTS

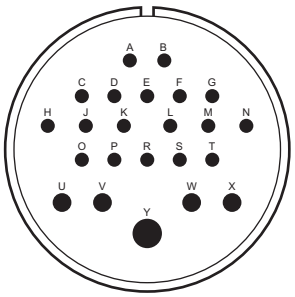

40-3†

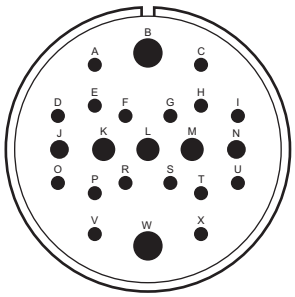

40-4†

24-28†

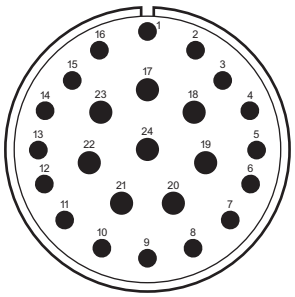

40-A24

	40-3†	40-4†	24-28†	40-A24
CONTACTS	18-#16 (A-T) 4-#12 (U-X); 1-#4 (Y)	16-#16 (A, C-I, O-V, X) 2-#12 (J, N); 3-#8 (K, L, M); 2-#4 (B, W)	24-#16	16-#12 (1-16) 8-#8 (17-24)
RATING	D	D	INST.	D

25 CONTACTS

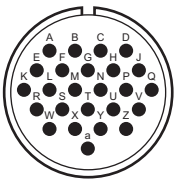

24A25

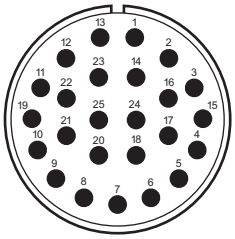

32A25

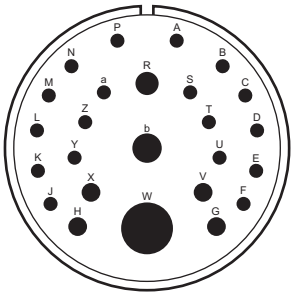

40-11†

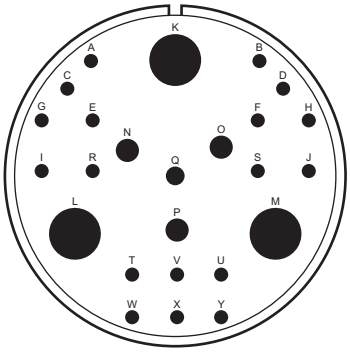

48-3†

	24A25	32A25	40-11†	48-3†
CONTACTS	25-#16	25-#12	18-#16 (A-F, J-P, S-U, Y, Z a) 4-#12 (G, H, V, X) 1-#8 (R), 1-#4 (b), 1-#0 (W)	18-#16 (A-J, R-Y) 1-#12 (Q), 3-#8 (N-P) 3-#0 (K-M)
RATING	A	A	D	D

26 CONTACTS

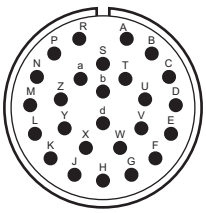

28-12†

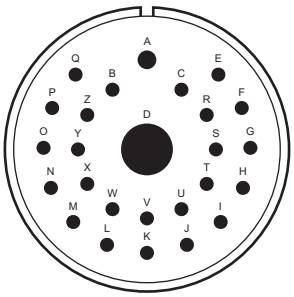

40-6†

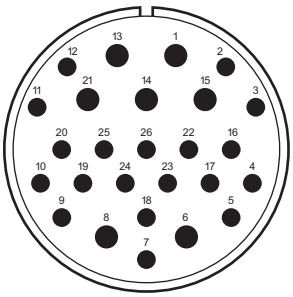

40-26

	28-12†	40-6†	40-26
CONTACTS	26-#16	24-#16 (B, C, E, Z) 1-#12 (A), 1-#0 (D)	19-#12 (2-5,7,9-12,16-20,22-26) 7-#8 (1,6,8,13-15,21)
RATING	A	D	A

† = Military designation per MIL-STD-1651. ‡ = Military designation inactive for new design. ★= VG95234

4C

AS50151

INSERT CONFIGURATIONS BY NUMBER OF CONTACTS

FACE VIEW OF PIN INSERTS SHOWN APPROXIMATELY 3/4 ACTUAL SIZE

27 CONTACTS

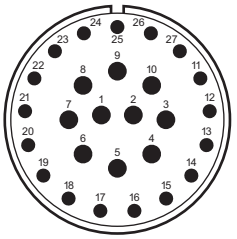

32A27

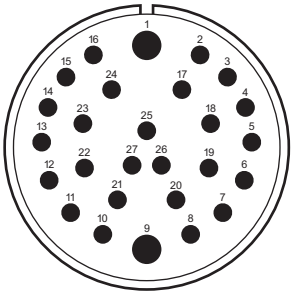

40A27

28 CONTACTS

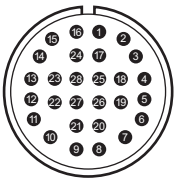

24A28

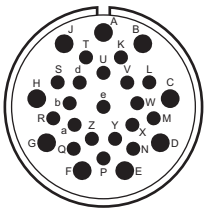

28A63

	32A27	40A27	24A28	28A63
CONTACTS	10-#12 (1-10) 17-#16 (11-27)	25-#12 (2 thru 8, 10 thru 27) 2-#4 (1,9)	28-#16	19-#16 (K-e) 9-#12 (A-J)
RATING	**A**	**D**	**I**	**A** (e) **I** (balance)

29 CONTACTS

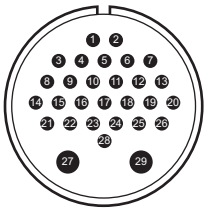

28-A29

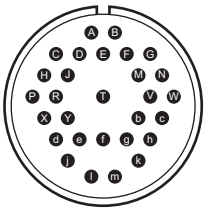

28A55

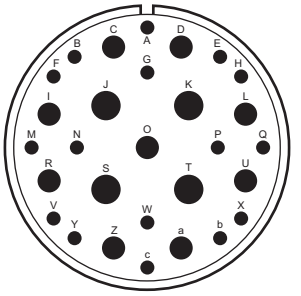

40-10†

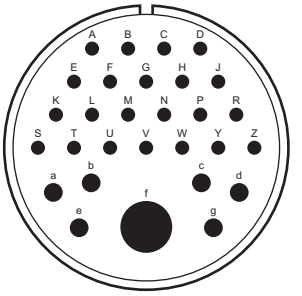

40-12‡

	28-A29	28A55	40-10†	40-12‡
CONTACTS	27-#16 (1-26,28) 2-#8 (27,29)	29-#16	16-#16 (A, B, E-H, M, N, P, Q, V-Y, b, c) 9-#8 (C, D, I, L, O, R, U, z, a) 4-#4 (J, K, S, T)	22-#16 (A-Z) 6-#12 (a-e, g), 1-#0 (f)
RATING	**D**	**A**	**A**	**D**

30 CONTACTS

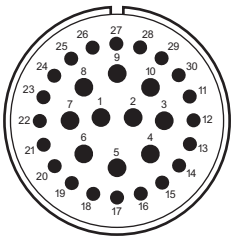

32A30

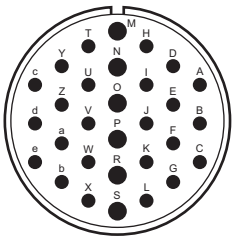

32-8†

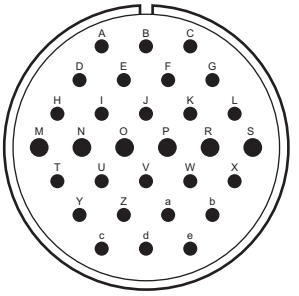

40-1†

31 CONTACTS

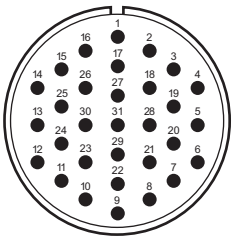

32-31

	32A30	32-8†	40-1†	32-31
CONTACTS	20-#16 (11-30) 10-#12 (1-10)	24-#16 (A-L, T-Z, a-e) 6-#12 (M-S)	24-#16 (A-L,T-e) 6-#12 (M-S)	31-#16
RATING	**A**	**A** For new MIL equip. design, use 32-7	**D**	**A**

† = Military designation per MIL-STD-1651. ‡ = Military designation inactive for new design. ★= VG95234

SPACECRAFT COMPONENTS CORP.
3040 Clayton Street
North Las Vegas, NV 89032
Phone: 702.851.7600
Fax: 702.851.7620
Email: salesinfo@spacecraft.com
Web: www.spacecraft.com

INSERT CONFIGURATIONS BY NUMBER OF CONTACTS

FACE VIEW OF PIN INSERTS SHOWN APPROXIMATELY 3/4 ACTUAL SIZE

31 CONTACTS (CONT.)

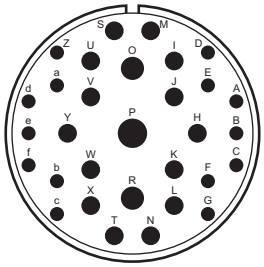

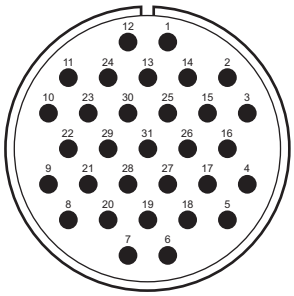

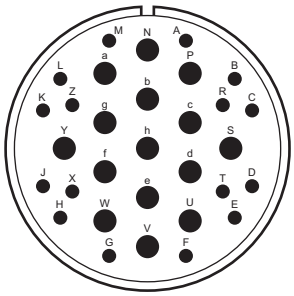

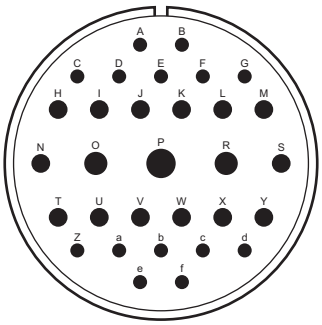

	36-9†	40-31	40A51	44-2†
CONTACTS	14-#16 (A-G, Z-f) 14-#12 (H-N, S-Y) 2-#8 (O, R), 1-#4 (P)	31-#12	16-#16 (A-M,R,T,X,Z) 15-#8 (N,P,S,U-W,Y,a-h)	14-#16 (A-G, Z-f) 14-#12 (H-N,S-Y) 2-#8 (O,R), 1-#4 (P)
RATING	A	D	A	D

31 CONTACTS (CONT.) / 32 CONTACTS / 34 CONTACTS

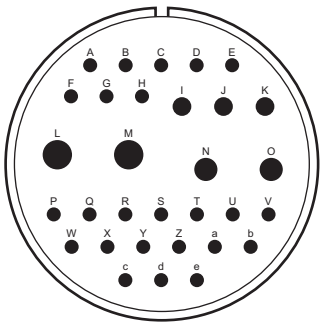

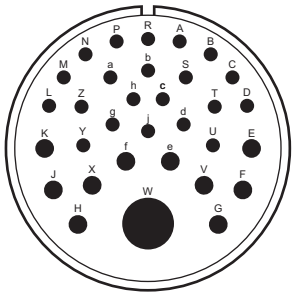

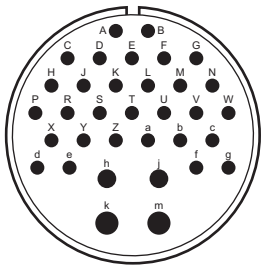

	44-3†	40-14‡	36-20‡
CONTACTS	24-#16 (A-H, P-e) 3-#12 (I, J, K) 2-#8 (N, O), 2-#4 (L, M)	21-#16 (A-D, L-U, Y-d, g, h, j) 10-#12 (E-K, V, X, e, f) 1-#0 (W)	30-#16 (A-g) 2-#12 (h-j) 2-#8 (k, m)
RATING	D	D	A

35 CONTACTS

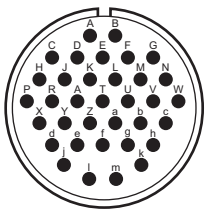

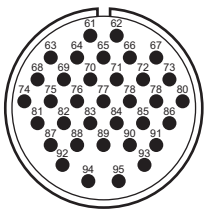

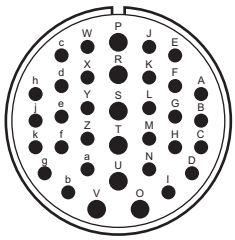

	28-15†	28A35	32-7†
CONTACTS	35-#16	35-#16	28-#16 (A-N, W-Z, a-k) 7-#12 (O-V)
RATING	**A** For new MIL equip. design, use 28-21	A	**INST.** (A,B,h,j) **A** (balance)

† = Military designation per MIL-STD-1651. ‡ = Military designation inactive for new design. ★ = VG95234

AS50151

INSERT CONFIGURATIONS BY NUMBER OF CONTACTS

FACE VIEW OF PIN INSERTS SHOWN APPROXIMATELY 3/4 ACTUAL SIZE

35 CONTACTS CONT.

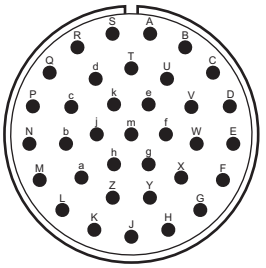

36-15†

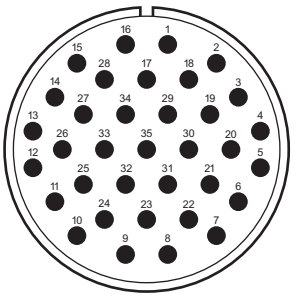

40-35

36 CONTACTS

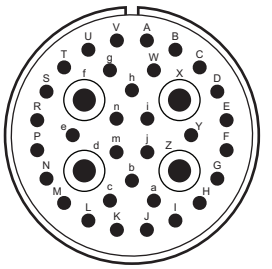

36-35

	36-15†	40-35	36-35
CONTACTS	35-#16	35-#12	4-#8 (d, f, X, Z) 32-#16 (A-W,Y,a,b,c,e,g-n)
RATING	**D** (m); **A** (balance)	**D**	**A**

37 CONTACTS

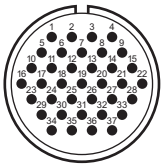

22A37

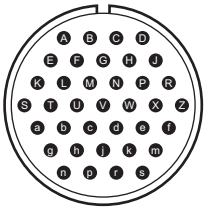

28-21†

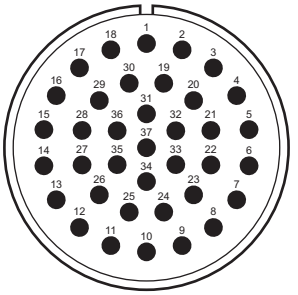

40B37

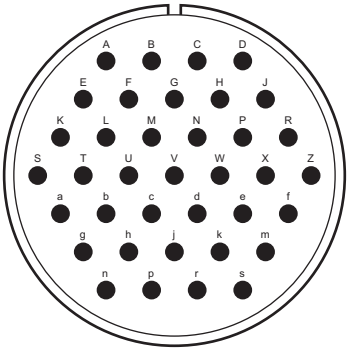

48-53

	22A37	28-21†	40B37	48-53
CONTACTS	37-#18	37-#16	37-#12	37-#12
RATING	**A**	**A**	**A**	**A**

38 CONTACTS

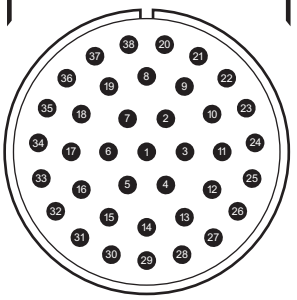

40A38

39 CONTACTS

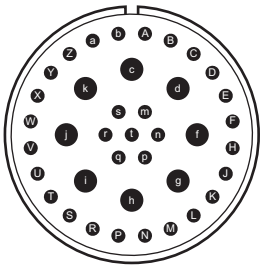

36-54

40 CONTACTS

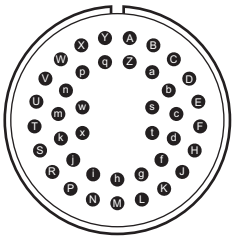

32A40

41 CONTACTS

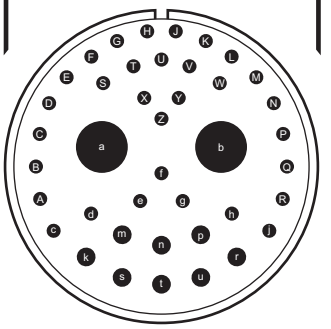

44-4†

	40A38	36-54	32A40	44-4†
CONTACTS	38-#12	31-#16 (A-b, m-t) 8-#8 (c-k)	40-#16	31-#16 (A-Z, c, j) 8-#12 (k-u), 2-#0 (a, b)
RATING	**A**	**A**	**A**	**D**

† = Military designation per MIL-STD-1651. ‡ = Military designation inactive for new design. ★= VG95234

SPACECRAFT COMPONENTS CORP.
3040 Clayton Street
North Las Vegas, NV 89032
Phone: 702.851.7600
Fax: 702.851.7620
Email: salesinfo@spacecraft.com
Web: www.spacecraft.com

INSERT CONFIGURATIONS BY NUMBER OF CONTACTS

FACE VIEW OF PIN INSERTS SHOWN APPROXIMATELY 3/4 ACTUAL SIZE

42 CONTACTS

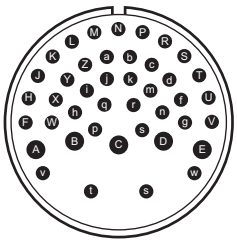

32-53

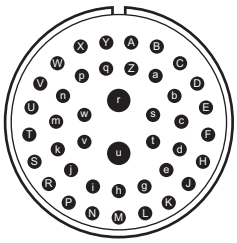

32-59

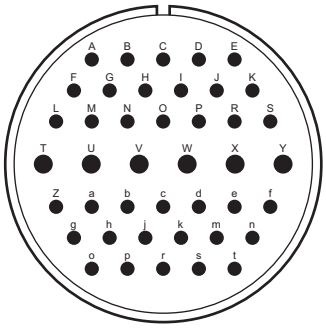

44-1†

	32-53	32-59	44-1†
CONTACTS	37-#16 (F-w) 5-#12 (A-E)	2-#8 (r, u) 40-#16 (balance)	36-#16 (A-S, Z-t) 6-#12 (T-Y)
RATING	**E** (t,u); **INST.** (balance)	**A**	**D**

44 CONTACTS

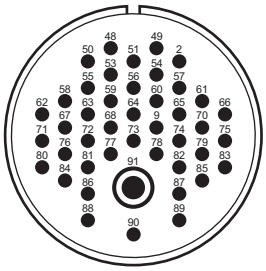

36-74

46 CONTACTS

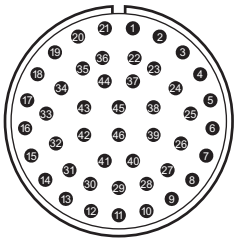

32-73†

	36-74	32-73†
CONTACTS	43-#16 (48-90) 1-#8	46-#16
RATING	**A**	**A**

47 CONTACTS

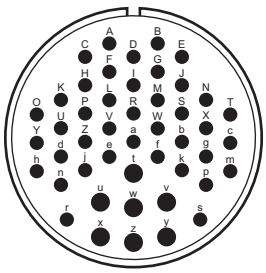

36-7†

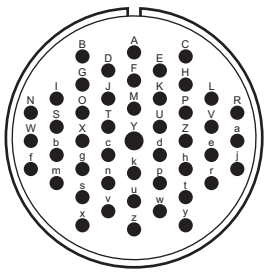

36-8†

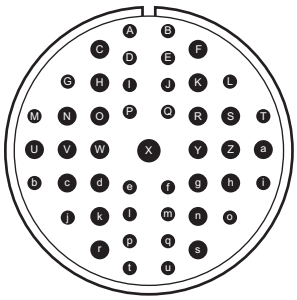

40-9†

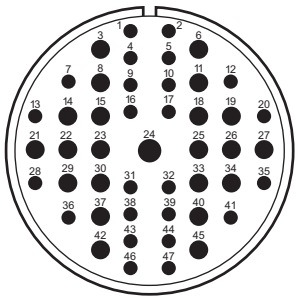

40-47

	36-7†	36-8†	40-9†	40-47
CONTACTS	40-#16 (A-Z, a-s) 7-#12 (t-z)	46-#16 (A-X, Z-z) 1-#12 (Y)	24-#16 (A, B, D, E, G, I, J, L, M, P, Q, T, b, e, f, i, j, l, m, o, p, q, t, u) 22-#12 (C, F, H, K, N, O,R, S, U-W, Y, Z, a, c, d, g, h, k, n, r, s), 1-#8 (X)	24-#16 (1,2,4,5,7,9,10,12,13,16,17,20, 28, 31,32,25,38,39,44 ,43,44,46,47) 22-#12 (3,6,8,11,14,15,18,19,21,22,23,25, 26,27,29,30,33,34,37,40,42,45) 1-#8 (24)
RATING	**A**	**A**	**A**	**A**

† = Military designation per MIL-STD-1651. ‡ = Military designation inactive for new design. ★= VG95234

AS50151

INSERT CONFIGURATIONS BY NUMBER OF CONTACTS

FACE VIEW OF PIN INSERTS SHOWN APPROXIMATELY 3/4 ACTUAL SIZE

47 CONTACTS (CONT.) — **48 CONTACTS** — **51 CONTACTS**

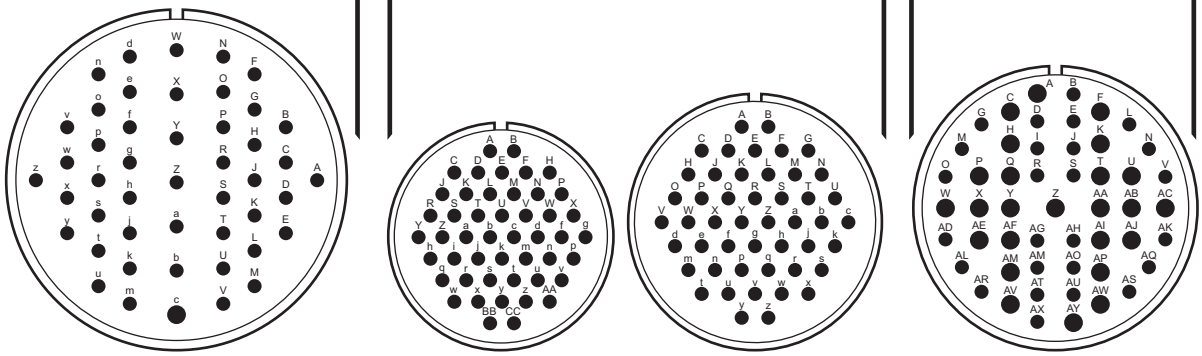

	48-2†	32A48	36-10†	40-951 (A,P)
CONTACTS	46-#16 (A-b, d-z) 1-#12 (c)	48-#16	48-#16	25-#12 (A,C,F,H,K,P,Q,T,U,W-AC, AE,AF,AI,AJ,AM,AP,AV,AW) 26-#16 (balance)
RATING	**E** (W-b); **D** (balance)	**I**	**A**	**A**

52 CONTACTS — **53 CONTACTS** — **54 CONTACTS**

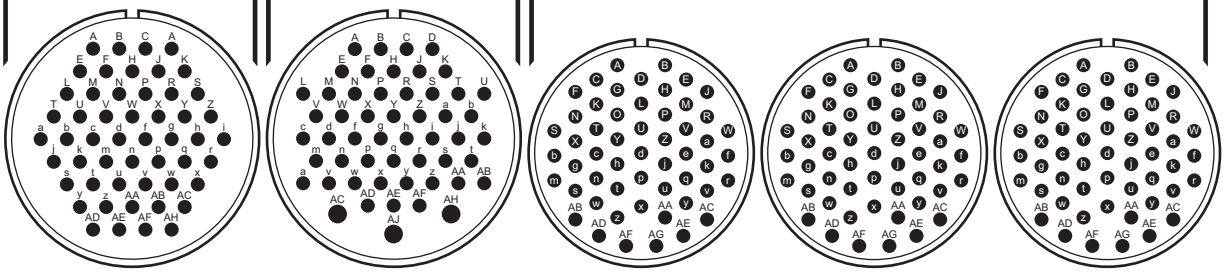

	36-52†	36-71	32-22†	32-64	32-88
CONTACTS	52-#16	50-#16 (A-AB, AD-AF) 3-#12 (AC, AH, AJ)	54-#16	54-#16	54-#16
RATING	**A**	**A**	**A**	**INST.**	**A**

55 CONTACTS — **56 CONTACTS**

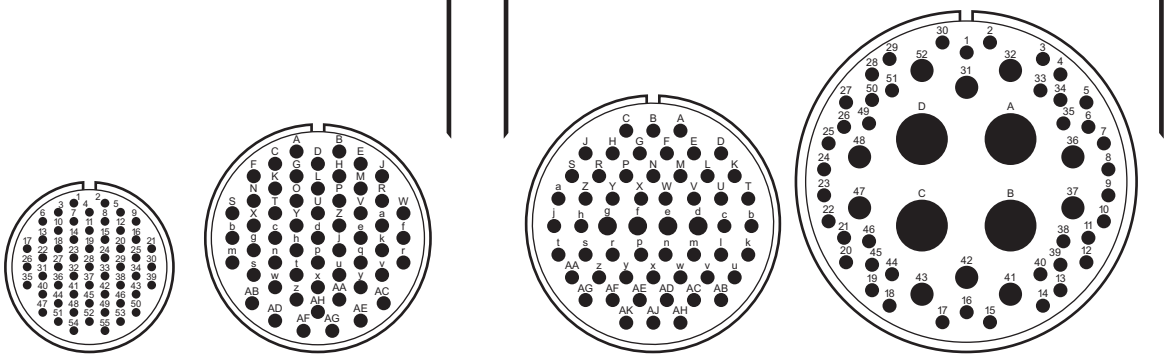

	24A55	32A55	36-66†	48-57
CONTACTS	55-#20	55-#16	52-#16 (A-c, h-AH) 4-#12 (d, e, f, g)	42-#16 (1-30, 33-35, 38-40, 44-46, 49-51) 10-#8 (31, 32, 36, 37, 41-43, 47, 48, 52) 4-#0 (A-D)
RATING	**A**	**A**	**A**	**A**

† = Military designation per MIL-STD-1651. ‡ = Military designation inactive for new design. ★ = VG95234

SPACECRAFT COMPONENTS CORP.
3040 Clayton Street
North Las Vegas, NV 89032
Phone: 702.851.7600
Fax: 702.851.7620
Email: salesinfo@spacecraft.com
Web: www.spacecraft.com

INSERT CONFIGURATIONS BY NUMBER OF CONTACTS

FACE VIEW OF PIN INSERTS SHOWN APPROXIMATELY 3/4 ACTUAL SIZE

60 CONTACTS

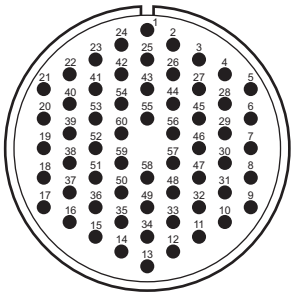

40S27

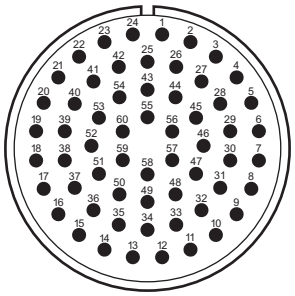

40-53
40A60

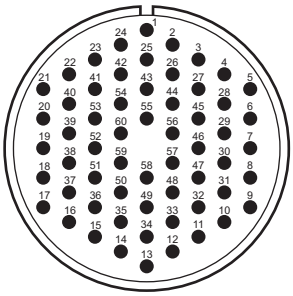

40-62

	40S27	40-53 / 40A60	40-62
CONTACTS	60-#16	60-#16	60-#16
RATING	A	A	A

61 CONTACTS

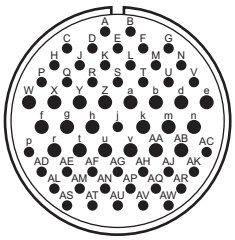

32A69★

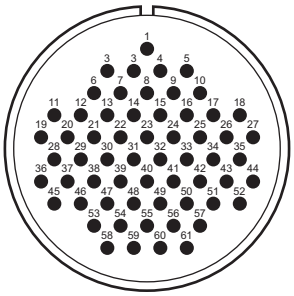

40-70

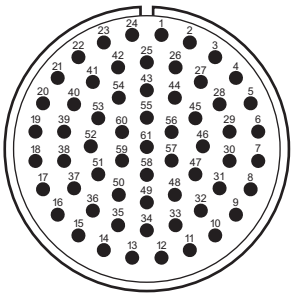

40-63

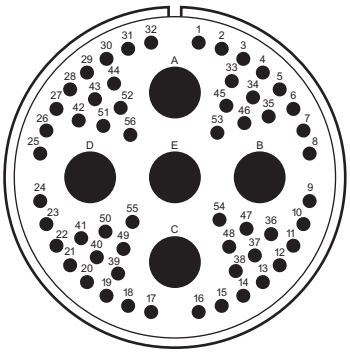

48-52

	32A69★	40-70	40-63	48-52
CONTACTS	41-#18 (A-V, j, p, AC-AW) 20-#16 (W-Z, a-v, AA, AB)	61-#16	61-#16	56-#16 (1-56) 5-#0 (A-E)
RATING	I	A	A	A

62 CONTACTS

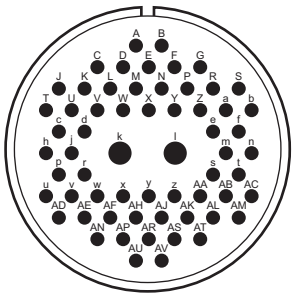

40A62

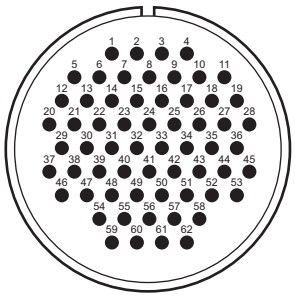

40-82

65 CONTACTS

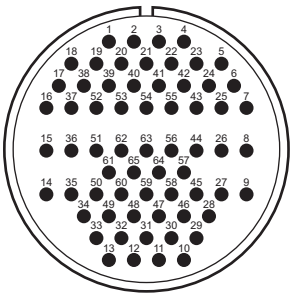

40A65

	40A62	40-82	40A65
CONTACTS	60-#16 (A-j,m-AV) 2-#8 (k,l)	62-#16	65-#16
RATING	A	A	A

† = Military designation per MIL-STD-1651. ‡ = Military designation inactive for new design. ★= VG95234

AS50151

INSERT CONFIGURATIONS BY NUMBER OF CONTACTS

FACE VIEW OF PIN INSERTS SHOWN APPROXIMATELY 3/4 ACTUAL SIZE

68 CONTACTS

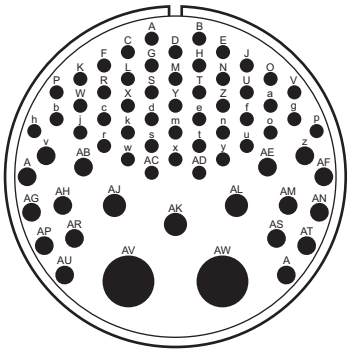

48-4†

72 CONTACTS

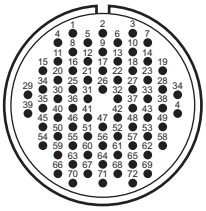

28-72

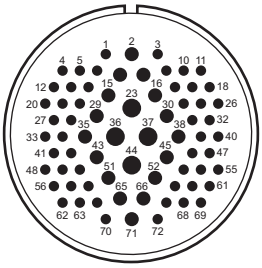

36-A72

	48-4†	28-72	36-A72
CONTACTS	47-#16 (A-u, w, y, AC,AD) 16-#12 (v, z, AA, AB, AE-AH, AM-AU, AX) 3-#8 (AJ-AL), 2-#0 (AV, AW)	72-#20	52-#18 (balance) 16-#16 (2,7,8,15,16,29,30,35,38,43, 45,51,5265,66,71) 4-#12 (23,36,37,44)
RATING	**D** (AJ-AL, AV, AW); **A** (balance)	**I**	**I**

75 CONTACTS

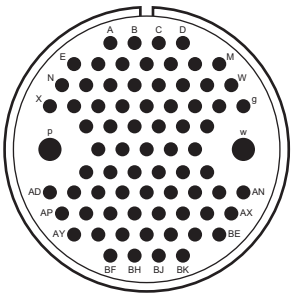

40A75

78 CONTACTS

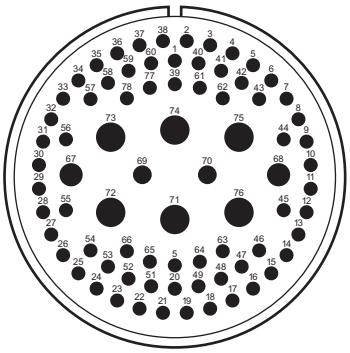

48-55

	40A75	48-55
CONTACTS	73-#16 (A-n, q-v, x-BK) 2-#8 (p, w)	68-#16 (1-66, 77, 78) 2-#12 (69, 70); 2-#8 (67, 68) 6-#4 (71-76)
RATING	**A**	**A**

† = Military designation per MIL-STD-1651. ‡ = Military designation inactive for new design. ★= VG95234

SPACECRAFT COMPONENTS CORP.
3040 Clayton Street
North Las Vegas, NV 89032
Phone: 702.851.7600
Fax: 702.851.7620
Email: salesinfo@spacecraft.com
Web: www.spacecraft.com

INSERT CONFIGURATIONS BY NUMBER OF CONTACTS

FACE VIEW OF PIN INSERTS SHOWN APPROXIMATELY 3/4 ACTUAL SIZE

85 CONTACTS

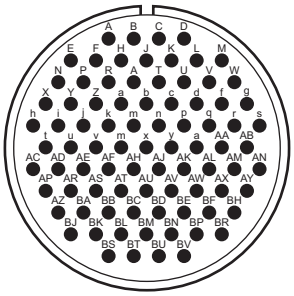

40-56†

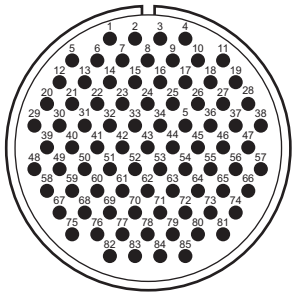

40A56 Numbered 71-156
40N56 Numbered 1-85

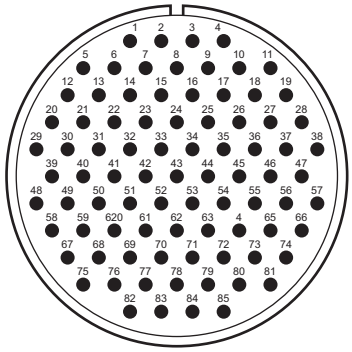

48-62†

CONTACTS	85-#16	85-#16	85-#16
RATING	A	A	D

100 CONTACTS

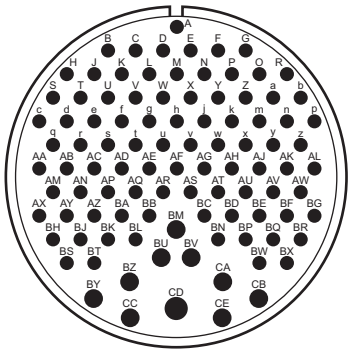

48-5‡

104 CONTACTS

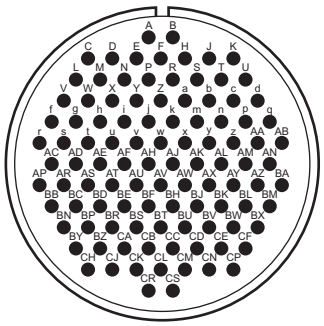

44-52†

150 CONTACTS

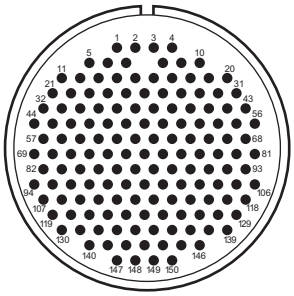

40-150
40A150

CONTACTS	90-#16 (A-BL, BN-BT, BW, BX) 9-#12 (BM, BU, BV, BY-CC, CE) 1-#8 (CD)	104-#16	150-#18
RATING	A	A	I

† = Military designation per MIL-STD-1651. ‡ = Military designation inactive for new design. ★= VG95234

Need a Special Component for a Special Project?

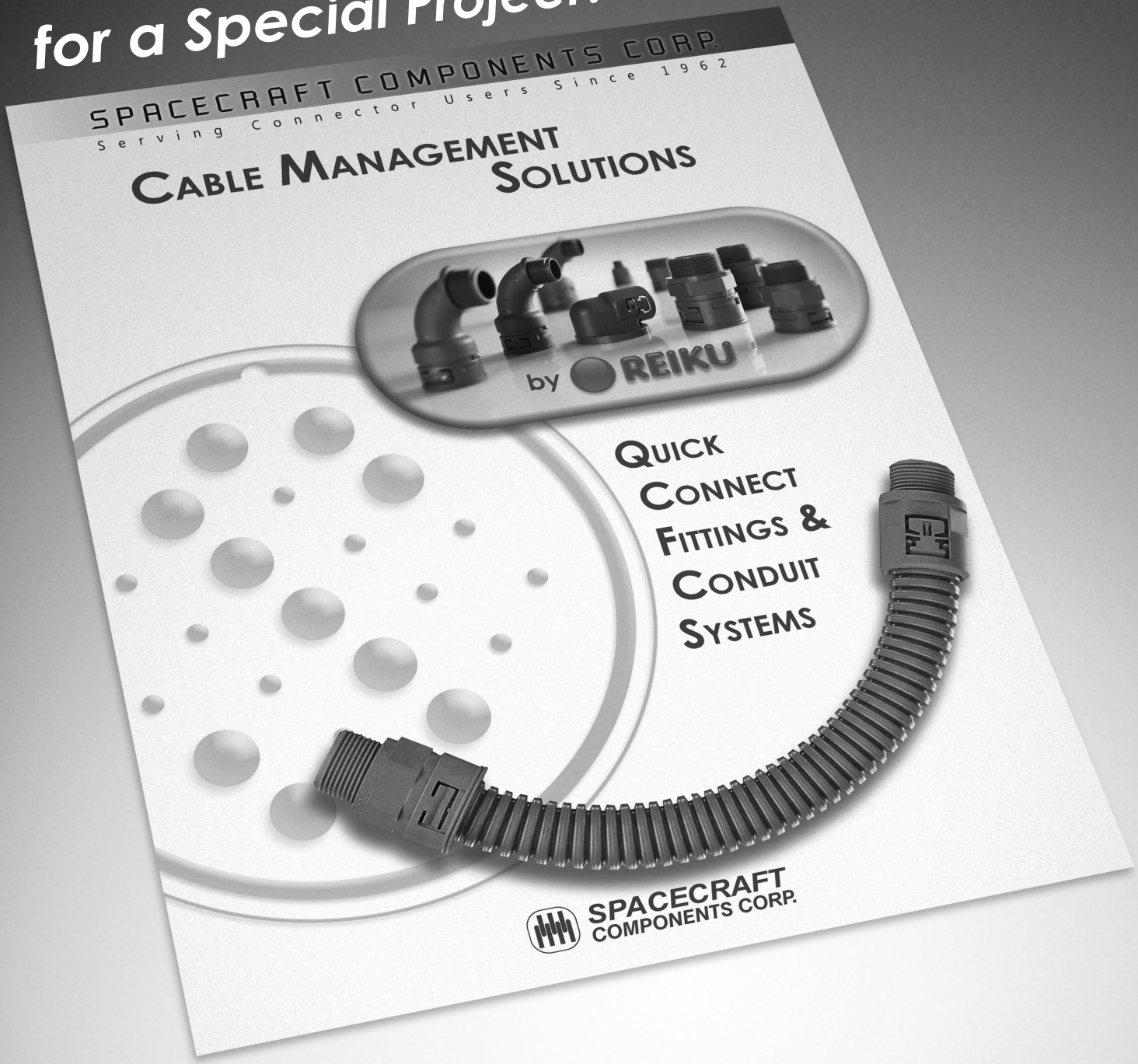

Spacecraft has a wide range of specialized products aimed at providing our customers with solutions to a wide range of issues, whether it be harsh environments, quick connect/disconnect needs, vibration resistance, and so much more.

Contact Spacecraft to discover what solutions we can offer you, or visit our website to view our line of specialized products.

SPACECRAFT COMPONENTS CORP.

702-851-7600

www.spacecraft.com

SECTION 5C
CONNECTORS FOR PLASTIC CONDUIT

FRONT VIEW SIDE VIEW

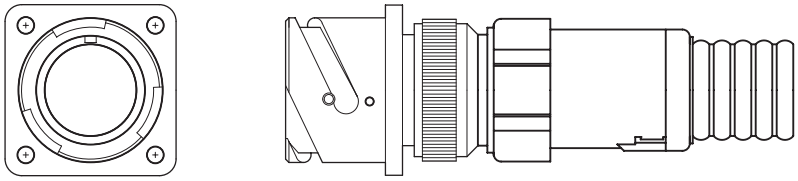

Wall Mount Receptacle SCPB00TRAC*
For Dimensions, see Page 1C-17

FRONT VIEW SIDE VIEW

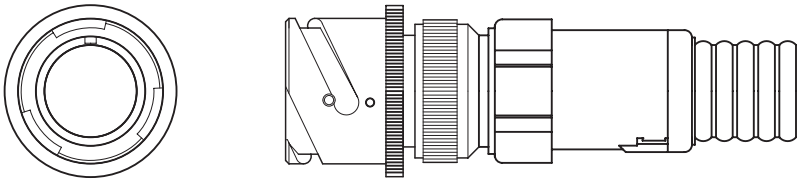

In-Line Receptacle SCPB01TRAC
*For Dimensions, see Page 1C-31

FRONT VIEW SIDE VIEW

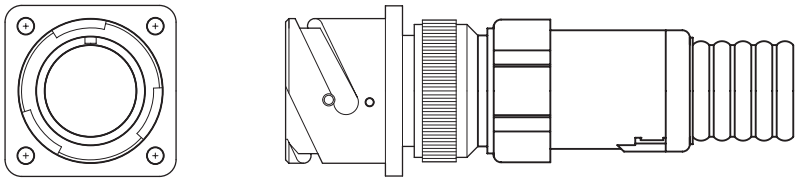

Wall Mount Receptacle, Rear Panel Mount SCPB030TRAC*
For Dimensions, see Page 1C-49

FRONT VIEW SIDE VIEW

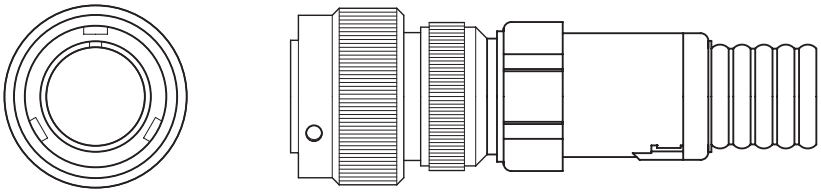

Straight Plug SCPB06TRAC*
For Dimensions, see Page 1C-71

FLEXIBLE CONDUIT - PLASTIC

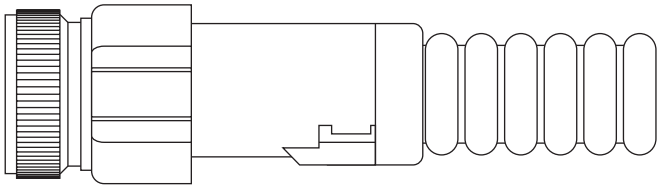

Class: TRAC for connectors supplied with one piece (no "U" clip) fittings: Ex: With UN threads. (Ex: SCPB06TRAC-28-12S(23U18). With PG Threads (ex: SCPB06TRAC-28-12S(36P36).

- Standard connector, fittings and conduit are black. Standard contacts supplied with connectors are gold plated crimp style. Internal wire sealing grommet is included. Other options available, consult factory.
- Fittings may be purchased individually by using the part numbers listed (next page, left column).
- Conduit may be purchased by ordering the conduit P/N listed (next page, right column).
- Conduit available in "G" (course) and in some cases "F" (fine) profile.
- Meets IP67 standards.
- Halogen free, self extinguishing, non flame spreading.
- Items that have an asterisk (*), consult factory.

UN Fitting

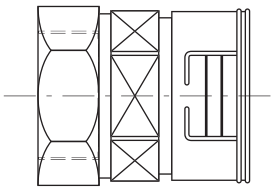

VP I V B - 17 U 14

VP Polyamide, Multi-Components

I Female thread
G Straight

R With seal on tube
V Seal set (IP 67)

B Black
G Grey

Nominal width

U UNEF/UNS thread
S Push-in part

Thread size

PG Fitting

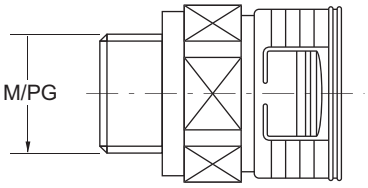

VP G V B - 10 P 09

VP Polyamide, multi-components

G Straight

R With seal on tube
V Seal set (IP 67)

B Black
G Grey

Nominal width

M Metric thread
P PG thread

Thread size

SPACECRAFT COMPONENTS CORP.
3040 Clayton Street
North Las Vegas, NV 89032
Phone: 702.851.7600
Fax: 702.851.7620
Email: salesinfo@spacecraft.com
Web: www.spacecraft.com

FITTING SELECTION UNEF / CONDUIT SELECTION

SHELL SIZE	BACKSHELL THREAD	TRAC FITTING P/N FOR UNEF THREADS (IP67)	NOMINAL WIDTH	METRIC	TRAC Transit Conduit Heavy Duty, Flame	TRAC Transit Conduit High Flexible Flame
10SL	5/8-24UNEF	VPIVB-07U05	7	10	PARFB-07G	
		VPIVB-10U05*	10	12	PARFB-10F	PARFB-10F
		VPIVB-12U05	12	16	PARFB-12F	PARFB-12F
14S	3/4-20UNEF	VPIVB-10U07*	10	12	PARFB-10F	PARFB-10F
		VPIVB-12U07	12	16	PARFB-12F	PARFB-12F
		VPIVB-17U07	17	20	PARFB-17F OR 17G	PARFB-17G
16S	7/8-20UNEF	VPIVB-12U09	12	16	PARFB-12F	PARFB-12F
		VPIVB-17U09*	17	20	PARFB-17F OR 17G	PARFB-17G
16	7/8-20UNEF	VPIVB-12U09	12	16	PARFB-12F	PARFB-12F
		VPIVB-17U09	17	20	PARFB-17F OR 17G	PARFB-17G
18	1-20UNEF	VPIVB-12U11*	12	16	PARFB-12F	PARFB-12F
		VPIVB-17U11	17	20	PARFB-17F OR 17G	PARFB-17G
		VPIVB-23U11*	23	25	PARFB-23G	PARFB-23G
20	1 3/16-18UNEF	VPRIB-12U14*	12	16	PARFB-12F	PARFB-212F
		VPIVB-17U14	17	20	PARFB-17F OR 17G	PARFB-17G
		VPIVB-23U14*	23	25	PARFB-23G	PARFB-23G
		VPRIB-29U14*	29	29	PARFB-29G	PARFB-29G
		VPIVB-36U14*	36	40	PARFB-36B	PARFB-36G
22	1 3/16-18UNEF	VPIVB-12U14*	12	16	PARFB-12F	PARFB-12F
		VPIVB-17U14	17	20	PARFB-17F OR17G	PARFB-17G
		VPIVB-23U14	23	25	PARFB-23G	PARFB-23G
		VPIVB-29U14*	29	29	PARFB-29G	PARFB-29G
		VPIVB-36U14*	36	40	PARFB-36G	PARFB-36G
24	1 7/16-18UNEF	VPIVB-12U18*	12	16	PARFB-12F	PARFB-12F
		VPIVB-17U18*	17	20	PARFB-17F OR 17G	PARFB-17G
		VPIVB-23U18	23	25	PARFB-23G	PARFB-23G
		VPIVB-29U18*	29	29	PARFB-29G	PARFB-29G
		VPIVB-36U18*	36	40	PARFB-36G	PARFB-36G
28	1 7/16-18UNEF	VPIVB-12U18*	12	16	PARFB-12F	PARFB-12F
		VPIVB-17U18*	17	20	PARFB-17F OR 17G	PARFB-17G
		VPIVB-23U18	23	25	PARFB-23G	PARFB-23G
		VPIVB-29U18*	29	29	PARVG-29G	PARFB-29G
		VPIVB-36U18*	36	40	PARFB-36G	PARFB-36G
32	1 3/4-18UNS	VPIVB-17U20*	17	20	PARFB-17F OR 17G	PARFB-17G
		VPIVB-23U20*	23	25	PARFB-23G	PARFB-23G
		VPIVB-29U20*	29	32	PARFB-29G	PARFB-29G
		VPIVB-36U20*	36	40	PARFB-36G	PARFB-36G
36	2-18UNS	VPIVB-23U24*	23	25	PARFB-23G	PARFB-23G
		VPIVB-29U24	29	32	PARFB-29G	PARFB-29G
		VPIVB-36U24*	36	40	PARFB-36G	PARFB-36G
		VPIVB-48U24*	48	50	PARFB-48G	PARFB-48G
40	2 1/4-16UN	VPIVB-23U25*	23	25	PARFB-23G	PARFB-23G
		VPIVB-29U25*	29	32	PARFB-29G	PARFB-29G
		VPIVB-36U25*	36	40	PARFB-36G	PARFB-36G
		VPIVB-48U25*	48	50	PARFB-48G	PARFB-48G

FITTING SELECTION PG / CONDUIT SELECTION

PG THREAD	TRAC FITTING P/N FOR PG THREADS (IP67)	NOMINAL WIDTH	METRIC	TRAC TRANSIT CONDUIT HEAVY DUTY, FLAME	TRAC TRANSIT CONDUIT HIGH FLEX, FLAME
07	VPGVB-10P07	10	12	PARFB-10F	PARFB-10F
07	VPGVB-10P07K	10	12	PARFB-10F	PARFB-10F
09	VPGVB-10P09	10	12	PARFB-10F	PARFB-10F
09	VPGVB-10P09K	10	12	PARFB-10F	PARFB-10F
09	VPGVB12P09	12	16	PARFB-12F	PARFB-12F
11	VPGVB-10P11	10	12	PARFB-10F	PARFB-10F
11	VPGVB-10P11K	10	12	PARFB-10F	PARFB-10F
11	VPGVB-12P11	12	16	PARFB-12F	PARFB-12F
11	VPGVB-12P11K	12	16	PARFB-12F	PARFB-12F
11	VPGVB-17P11	17	20	PARFB-17F or 17G	PARFB-17G
13.5	VPGVB-10P13	10	12	PARFB-10F	PARFB-10F
13.5	VPGVB-12P13	12	16	PARFB-12F	PARFB-12F
13.5	VPGVB-17P13	17	20	PARFB-17F or 17G	PARFB-17G
16	VPGVB-17P16	17	20	PARFB-17F or 17G	PARFB-17G
16	VPGVB-17P16K	17	20	PARFB-17F or 17G	PARFB-17G
16	VPGVB-23P16	23	25	PARFB-23G	PARFB-23G
21	VPGVB-17P21	17	20	PARFB-17F or 17G	PARFB-17G
21	VPGVB-23P21	23	25	PARFB-23G	PARFB-23G
29	VPGVB-29P29	29	29	PARFB-29G	PARFB-29G
29	VPGVB-36P29	36	40	PARFB-36B	PARFB-36G
36	VPGVB-36P36	36	40	PARFB-36B	PARFB-36G
42	VPGVB-48P42	48	50	PARFB-48G	PARFB-48G
48	VPGVB-48P48	48	50	PARFB-48G	PARFB-48G

FLEXIBLE CONDUIT - PLASTIC

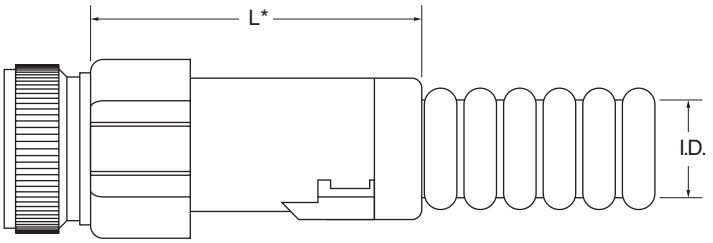

Note: Dimension "L" is dependent on conduit size used with each shell size. Please consult our Customer Service Department.

CLASS:	**PILAG***	Environmental, for PMA BVIRA fitting
CLASS:	**PILB***	Environmental, for PMA BFILB fitting.
CLASS:	**PILMG***	Environmental, for PMA BFILM fitting
CLASS:	**PIVG***	Environmental, for PMA BVIVG fitting
CLASS:	**PILJ***	Environmental, for PMA BFILJ fitting.

* For Mounting Hole Code See Table I of Applicable Receptacle

CLASS	SHELL SIZE	PMA FITTING	PART NUMBER SUFFIX	CONDUIT INNER DIA.	L
PILAG	10SL	BVIRA-U152	(U152)	.47 [11.9]	1.44 [36.5]
	14S	BVIRA-U182	(U182)	.47 [11.9]	1.44 [36.5]
	14S	BVIRA-U187	(U187)	.60 [15.2]	1.75 [44.5]
PILB	14/20	BFILB-U297	(U297)	.60 [15.2]	1.50 [38.0]
	20 & 22	BFILB-U293	(U293)	.87 [22.0]	1.50 [38.0]
PILMG	16S & 16	BFILM-U293	(U217)	.60 [15.2]	1.30 [33.0]
	18	BFILM-U247	(U247)	.60 [15.2]	1.38 [35.0]
	18	BFILM-U242	(U242)	.47 [12.0]	1.38 [35.0]
	20 & 22	BFILM-U297	(U297)	.60 [15.2]	1.38 [35.0]
PIVG	20 & 22	BVIVG-U293	(U353)	.87 [22.0]	2.17 [55.0]
	24 & 28	BVIVG-U353	(U353)	.87 [22.0]	2.05 [52.0]
	24 & 28	BVIVG-U356	(U356)	1.44 [36.5]	2.48 [63.0]
	24 & 28	BVIVG-U357	(U357)	.60 [15.2]	1.83 [46.5]
	32	BVIVG-U436	(U436)	1.41 [35.8]	2.46 [62.5]
	32	BVIVG-U439	(U439)	1.09 [27.7]	2.03 [51.5]
	32	BVIVG-U433	(U433)	.87 [22.0]	2.05 [52.0]
	36	BVIVG-U509	(U509)	1.09 [27.7]	2.17 [55.0]
	36	BVIVG-U503	(U503)	.87 [22.0]	2.03 [51.5]
	40	BVIVG-U563	(U563)	.87 [22.0]	2.01 [51.0]
	40	BVIVG-U566	(U566)	1.41 [35.8]	2.44 [62.0]
	40	BVIVG-U568	(U568)	1.84 [46.7]	2.52 [64.0]
	40	BVIVG-U569	(U569)	1.09 [27.7]	2.01 [51.0]
PILJ	40	BFILJ-U568	(U568)	1.84 [46.7]	2.56 [65.0]

Dimensions are in Inches [mm]

SPACECRAFT COMPONENTS CORP.
3040 Clayton Street
North Las Vegas, NV 89032
Phone: 702.851.7600
Fax: 702.851.7620
Email: salesinfo@spacecraft.com
Web: www.spacecraft.com

CROSS REFERENCE, PMA TO TRAC SERIES

Shell Size	Backshell Thread	PMA BV (IP68)	PMA BF (IP67)	TRAC Fitting VPIVB (IP67)	NW	Metric	PMA Conduit Heavy Duty High Flex	PMA Conduit Heavy Duty Flex	PMA Conduit Heavy Duty Flame	PMA Conduit High Flexible Flame	TRAC Transit Conduit Heavy Duty Flame	TRAC Transit Conduit High Flexible Flame
10SL	5/8-24UNEF	BVIRA-U15M	BFILA-U15M	VPIVB-07U05	1	10	PCST-07B	VCST-07B	VAMT-07B	VAMLT-07B	PARVB-07G	
		BVIRA-U150	BFILA-U150	VPIVB-10U05*	10	12	PCST-10B	VCST-10B	VAMT-10B	VAMLT-10B	PARVB-10F	PARFB-10F
		BVIRA-U152	BFILA-U152	VPIVB-12U05	12	16	PCST-12B	VCST-12B	VAMT-12B	VAMLT-12B	PARVB-12F	PARFB-12F
14S	3/4-20UNEF	BVIRA-U180	BFILA-U180	VPIVB-10U07*	10	12	PCST-10B	VCST-1GS	VAMG-10B	VAMLT-10B	PARVB-10F	PARFB-10F
		BVIRA-U182	BFILA-U182	VPIVB-12U07	12	16	PCST-12B	VCST-12B	VAMT-12B	VAMLT-12B	PARVB-12F	PARFB-12F
		BVIRA-U187	BFILA-U182	VPIVB-17U07	17	20	PCS17 PCSG-17B	VCST/ VCSG-17B	VAMG-17B	VAMLG-17B	PARVB-17F OR17G	PARFB-17G
16S	7/8-20UNEF	BVIVG-U212	BFILM-U212	VPIVB-12U09	12	16	PCST-12B	VCST-12B	VAMT-12B	VAMLT-12B	PARVB-12F	PARFB-12F
		BVIVG-U217	BFILM-U217	VPIVB-17U09*	17	20	PCST/PCSG-17B	VCST/ VCSG-17B	VAMG-17B	VAMLG-17B	PARVB-17FOR 17G	PARFB-17G
16	7/8-20UNEF	BVIVG-U212	BFILM-U212	VPIVB-12U09	12	16	PCST-12B	VCST-12B	VAMT-12B	VAMLT-12B	PARVB-12F	PARFB-12F
		BVIVG-U217	BFILM-U217	VPIVB-17U09	17	20	PCST/PCSG-17B	VCST/ VCSG-17B	VAMG-17B	VAMLG-17B	PARVB-17F OR 17G	PARFB-17G
18	1-20UNEF	BVIVG-U242	BFILM-U242	VPIVB-12U11*	12	16	PCST-12B	VCST-12B	VAMT-12B	VAMLT-12B	PARVB-12F	PARFB-12F
		BVIVG-U247	BFILM-U247	VPIVB-17U11	17	20	PCST/PCSG-17B	VCST/ VCSG-17B	VAMG-17B	VAMLG-17B	PARVB-17F OR 17G	PARFB-17G
		BVIVG-U243		VPIVB-23U11*	23	25	PCSG-23B	VCSG-238	VAMG-23B	VAMLG-23B	PARVB-23G	PARFB-23G
20	1 3/16-18UNEF	BVIVG-U292		VPIVB-12U14*	12	16	PCST-12B	VCST-12B	VAMT-12B	VAMLT-12B	PARVB-12F	PARFB-212F
		BVIVG-U297	BFILM-U297	VPIVB-17U14	17	20	PCST/PCSG-17B	VCST/ VCSG-17B	VAMG-17B	VAMLG-17B	PARVB-17FOR 17G	PARFB-17G
		BVIVG-U293	BFILB-U293	VPIVB-23U14*	23	25	PCSG-23B	VCSG-23B	VAMG-23B	VAMLG-23B	PARVB-23G	PARFB-23G
		BVIVG-U299	BFILB-U299	VPIVB-29U14*	29	29	PCSG-29B	VCSG-29B	VAMG-29B	VAMLG-29B	PARVB-29G	PARFB-29G
			BFILB-U296	VPIVB-36U14*	36	40	PCSG-36B	VCSG-36B	VAMG-36B	VAMLG-36B	PARVB-36B	PARFB-36G
22	1 3/16-18UNEF	BVIVG-U292		VPIVB-12U14*	12	16	PSCST-12B	VSCST-12B	VAMT-12B	VAMLT-12B	PARVB-12F	PARFB-12F
		BV1VG-U297	BFILM-U297	VPIVB-17U14	17	20	PCST/ PCSG-17B	VCST/VCSG-17B	VAMG-17B	VAMLG-17B	PARVB-17FOR 17G	PARFB-17G
		BV1VG-U293	BFILB-U293	VPIVB-23U14	23	25	PCSG-23B	VCSG-23B	VAMG-23B	VAMLG-23B	PARV8-23G	PARFB-23G
		BVIVG-U299	BFILB-U299	VPIVB-29U14*	29	29	PCSG-29B	VCSG-29B	VAMG-29B	VAMLG-29B	PARVB-29G	PARFB-29G
			BFILB-U296	VPIVB-36U14*	36	40	PSCG-3SB	VSCG-36B	VAMG-36B	VAMLG-36B	PARV8-36G	PARFB-36G
24	1 7/16-18UNEF	BVIVG-U352		VPIVB-12U18*	12	16	PCST-12B	VCST-12B	VAMT-12B	VAMLT-12B	PARV8-12F	PARFB-12F
		BVIVG-U357	BFILB-U357	VPIVB-17U18*	17	20	PCST/ PCSG-17B	VCST/VCSG-17B	VAMG-17B	VAMLG-17B	PARVB-17FOR 17G	PARFB-17G
		BVIVG-U353	BFILB-U353	VPIVB-23U18	23	25	PCSG-23B	VCSG-23B	VAMG-23B	VAMLG-23B	PARVB-23G	PARFB-23G
		BVIVG-U359	BFILB-U359	VPIVB-29U13*	29	32	PCSG-29B	VCSG-29B	VAMG-29B	VAMLG-29B	PARVB-29G	PARFB-29G
		BVIVG-U356G		VPIVB-36U18*	36	40	PCSG-36B	VCSG-36B	VAMG-36B	VAMLG-36B	PARVB-36G	PARFB-36G
28	17/16-18UNEF	BVIVG-U352		VPIVB-12U18*	12	16	PCSG-12B	VCST-12B	VAMT-12B	VAMLT-12B	PARVB-12F	PARFB-12F
		BVIVG-U357	8FILB-U357	VPIVB-17U18*	17	20	PCST/PCSG-17B	VCST/ VCSG-17B	VAMG-17B	VAMLG-17B	PARVB-17F OR17G	PARFB-17G
		BVIVG-U353	BFILB-U353	VPIVB-23U18	23	25	PCSG-23B	VCSG-23B	VAMG-23B	VAMLG-23B	PARVB-23G	PARFB-23G
		BVIVG-U359	BFILB-U359	VPIVB-29U18*	29	32	PCSG-29B	VCSG-29B	VAMG-29B	VAMLG-293	PARVG-29G	PARFB-29G
		BVIVG-U356G		VPIVB-36U18*	36	40	PCSG-36B	VCSG-36B	VAMG-36B	VAMLG-35B	PARVB-36G	PARFB-36G
32	1 3/4-18UNS	BVIVG-U437		VPIVB-17U2Q*	17	20	PCST/PCSG-17B	VCST/ VCSG-17B	VAMG-17B	VAMLG-178	PARVB-17F OR 17G	PARFB-17G
		BVIVG-U433		VPIVB-23U20"	23	25	PCSG-23B	VCSG-23B	VAMG-23B	VAMLG-23B	PARVB-23G	PARFB-23G
		BVIVG-U439		VPIVB-29U20*	29	32	PCSG-29B	VCSG-29B	VAMG-29B	VAMLG-29B	PARVB-29G	PARFB-29G
		BVIVG-U436		VPIVB-36U20*	36	40	PCSG-36B	VCSG-36B	VAMG-36B	VAMLG-36B	PARVB-36G	PARFB-36G
36	2-18UNS	BVIVG-U503		VPIVB-23U24*	23	25	PCSG-23B	VCSG-23B	VAMG-23B	VAMLG-23B	PARVB-23G	PARF8-23G
		BV1VG-U509		VPIVB-29U24	29	32	PCSG-29B	VCSG-29B	VAMG-29B	VAMLG-29B	PARVB-29G	PARFB-29G
		BVIVG-U506		VPIVB-36U24*	36	40	PCSG-36B	VCSG-36B	VAMG-36B	VAMLG-36B	PARVB-36G	PARF8-36G
		BV1VG-U508		VPIVB-48U24*	48	50	PCSG-48B	VCSG-48B	VAMG-43B	VAMLG-48B	PARVB-48G	PARFB-48G
40	2 1/4-16UN	BVIVG-U563		VPIVB-23U25*	23	25	PCSG-23B	VCSG-23B	VAMG-23B	VAMLG-23B	PARVB-23G	PARF9-23G
		BVIVG-U569		VPIVB-29U25*	29	32	PGSG-29B	VCSG-29B	VAMG-29B	VAMLG-29B	PARVB-29G	PARFB-29G
		BVIVG-U566		VPIVB-36U25*	36	40	PCSG-36B	VCSG-36B	VAMG-36B	VAMLG-36B	PARVB-36G	PARFB-36G
		BVIVG-U568		VPIVB-48U25*	48	50	PCSG-48B	VCSG-48B	VAMG-48B	VAMLG-48B	PARVB-48G	PARFB-48G

Need a Special Component for a Special Project?

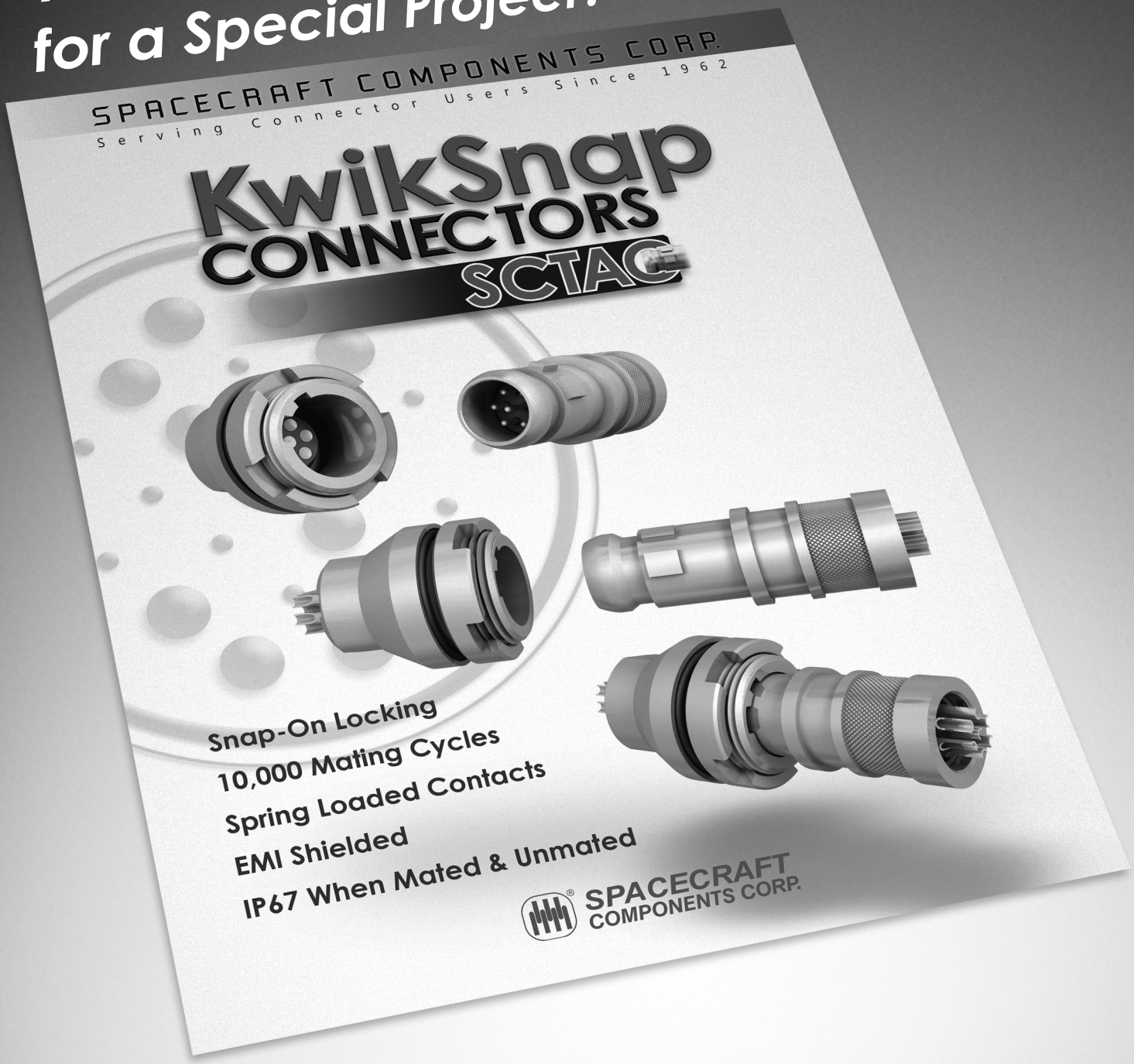

Spacecraft has a wide range of specialized products aimed at providing our customers with solutions to a wide range of issues, whether it be harsh environments, quick connect/disconnect needs, vibration resistance, and so much more.

Contact Spacecraft to discover what solutions we can offer you, or visit our website to view our line of specialized products.

SPACECRAFT COMPONENTS CORP.

702-851-7600

www.spacecraft.com

SECTION 6C
ACCESSORIES
AND
RECEPTACLE MOUNTING DATA

MOUNTING DATA FOR RECEPTACLES

MAXIMUM PANEL THICKNESS

MAXIMUM PANEL THICKNESS

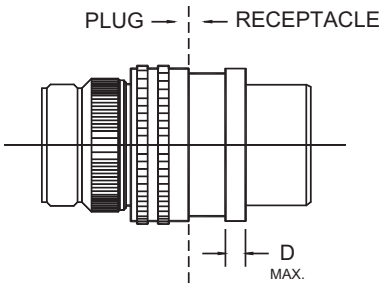

SHELL SIZE	D		
	00,02, 020,26	03,030, 038	TB SERIES
10SL	.146 [3.70]	.283 [7.20]	.393 [10.0]
14S	.146 [3 70]	.283 [7.20]	.378 [9.60]
16S	.146 [3 70]	.283 [7.20]	.378 [9.60]
16	.146 [3 70]	.295 [7.50]	.543 [13.8]
18	.146 [3 70]	.295 [7.50]	.512 [13.0]
20	.146 [3 70]	.295 [7.50]	.512 [13.0]
22	.146 [3.70]	.295 [7.50]	.512 [13.0]
24	.207 [5.25]	.295 [7.50]	.449 [11.4]
28	.207 [5.25]	.323 [8.20]	.488 [12.4]
32	.241 [6.10]	.295 [7.50]	.354 [9.0]
36	.241 [6.10]	.295 [7.50]	.354 [9.0]
40	.237 [6.00]	.295 [7.50]	.354 [9.0]

Dimensions are in Inches [mm]

PANEL CUT-OUT DIMENSIONS

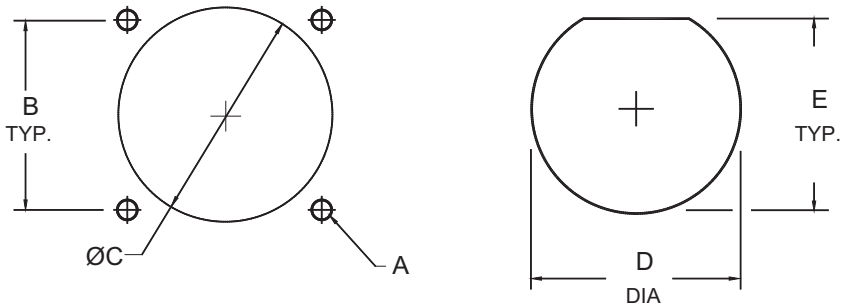

SHELL SIZE	A	B ±.004	C DIAMETER		D	E
	00,02,020, 03,030	00,02,020, 03,030	FRONT MOUNT 00,02,020	REAR MOUNT 03,030	JAM NUT 07,070	JAM NUT 07,070
10SL	.126 [3.20]	.717 [18.21]	.688 [17.46]	.750 [19.05]	.875 [22.23]	.830 [21.08]
14S	.126 [3.20]	.906 [23.01]	.813 [20.64]	1.000 [25.40]	1.125 [28.58]	1.080 [27.43]
16S/16	.126 [3.20]	.969 [24.61]	.938 [23.81]	1.125 [28.58]	1.250 [31.75]	1.210 [30.73]
18	.126 [3.20]	1.063 [27.00]	1.063 [26.99]	1.250 [31.75]	1.375 [34.93]	1.320 [33.53]
20	.126 [3.20]	1.157 [29.39]	1.188 [30.16]	1.375 [34.93]	1.500 [38.10]	1.450 [36.83]
22	.126 [3.20]	1.252 [31.80]	1.313 [33.34]	1.500 [38.10]	1.625 [41.28]	1.570 [39.88]
24	.146 [3.71]	1.374 [34.90]	1.438 [36.51]	1.625 [41.28]	1.750 [44.45]	1.700 [43.18]
28	.146 [3.71]	1.563 [39.70]	1.688 [42.86]	1.875 [47.63]	2.000 [50.80]	1.950 [49.53]
32	.169 [4.29]	1.752 [44.50]	1.938 [49.21]	2.125 [53.98]	2.250 [57.15]	2.200 [55.88]
36	.169 [4.29]	1.937 [49.20]	2.125 [53.98]	2.375 [60.33]	2.500 [63.50]	2.450 [62.23]
40	.169 [4.29]	2.185 [55.50]	2.375 [60.33]	2.625 [66.68]	2.750 [69.85]	2.700 [68.58]

Dimensions are in Inches [mm]

GROMMET HOLE SEALING RANGE

HOLE SIZE	SEALING RANGE	
18-20	.039-.082	[1.0-2.1]
16	.090-.118	[2.3-3.0]
12	.126-.177	[3.2-4.5]
8	.150-.256	[3.8-6.5]
4	.279-.366	[7.1-9.3]
0	.394-.539	[10.0-13.7]

RECOMMENDED TORQUE FORCES CONNECTOR BACKSHELLS

SIZE	IN./LB MAX	SIZE	IN/LB MAX.
10SL	26	22	85
14S	44	24	90
16	50	28	114
16S	50	32	120
18	55	36	153
20	65	40	170

SPACECRAFT COMPONENTS CORP.
3040 Clayton Street
North Las Vegas, NV 89032
Phone: 702.851.7600
Fax: 702.851.7620
Email: salesinfo@spacecraft.com
Web: www.spacecraft.com

FOR ALL SERIES HAVING A THREADED BACKSHELL

MS3057 - 20A C

MIL SPEC

DASH NUMBER
See Dimension Table below.

FINISH/MATERIAL

MS3057	FINISH	MATERIAL
Blank	Cadmium, olive drab 48 hr. salt spray	Aluminum alloy
A	Cadmium, olive drab over suitable underplate, 1000 hr. salt spray	
C	Cadmium, olive drab, 48 hr salt spray	
N	Electroless nickel	

Note: Bushing can be "telescoped" to achieve a smaller sealing diameter.

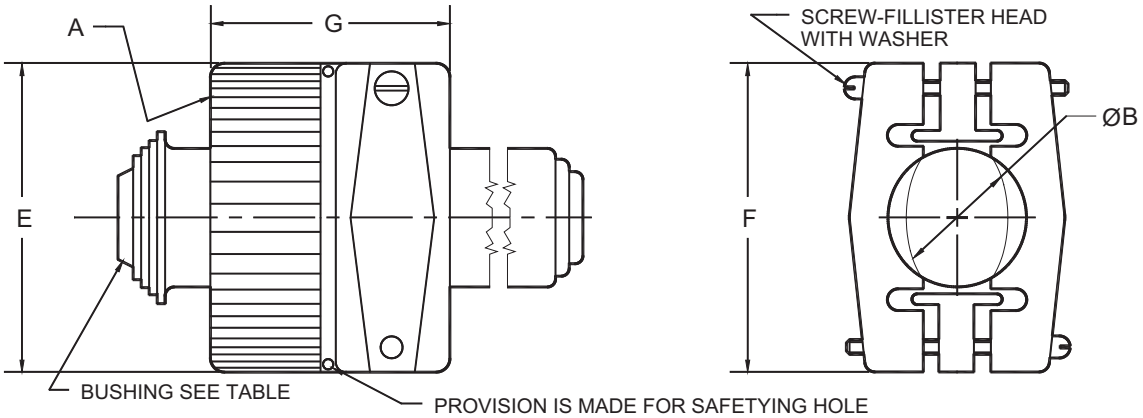

DASH NO.	CONNECTOR SHELL SIZE (REF)	A THREAD CLASS 2B	B MAX	ØE ±.031 [±0.79]	F ±.031 [±0.79]	G ±.031 [±0.79]	BUSHING (REF) (a)
-3A	8S & 10S	.500-28 UNEF	.250 [6.35]	.688 [17.48]	.812 [20.62]	.812 [20.62]	MS3420-3
-4A	10SL, 12S & 12	.625-24 UNEF	.312 [7.92]	.812 [20.62]	.875 [22.22]		MS3420-4
-6A	14S & 14	.750-20 UNEF	.438 [11.13]	.969 [24.61]	1.062 [26.97]	.875 [22.22]	MS3420-6
-8A	16S & 16	.875-20 UNEF	.562 [14.27]	1.094 [27.79]	1.156 [29.36]	.938 [23.83]	MS3420-8
-10A	18	1.000-20 UNEF	.625 [15.87]	1.188 [30.18]	1.250 [31.75]		MS3420-10
-12A	20 & 22	1.188-20 UNEF	.750 [19.05]	1.375 [34.92]	1.469 [37.31]		MS3420-12
-16A	24 & 28	1.438-18 UNEF	.938 [23.83]	1.656 [42.06]	1.688 [42.88]	1.031 [26.19]	MS3420-16
-20A	32	1.750-18 UNS	1.250 [31.75]	2.031 [51.59]	2.031 [51.59]	1.094 [27.79]	MS3420-20
-24A	36	2.000-18 UNS	1.375 [34.92]	2.219 [56.36]	2.281 [57.94]	1.156 [29.36]	MS3420-24
-28A	40	2.250-16 UN	1.625 [41.27]	2.500 [63.50]	2.688 [68.28]	1.688 [42.88]	MS3420-28
-32A	44	2.500-16 UN	1.875 [47.62]	2.781 [70.64]	2.938 [74.63]	1.750 [44.45]	MS3420-32
-40A	48	3.000-16 UN	2.375 [60.32]	3.281 [83.34]	3.500 [88.90]		MS3420-40

(a) Telescoping bushings are not supplied with clamps.
Dimensions are in Inches [mm]

MS3420

TELESCOPING RUBBER BUSHING

MS3420 - 16

MIL SPEC
Standard material & color is black neoprene.

DASH NUMBER
See Dimension Table below.

FOR USE WITH MS3057*A CABLE CLAMPS

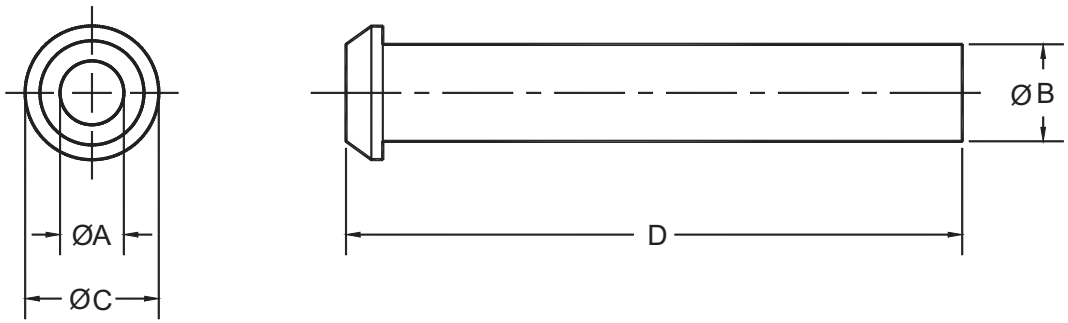

DASH NO.	ØA	ØB	ØC	D	MS3420-* SUPERSEDES	
					AN3420	MS39056
-3	.130 [3.30]	.210 [5.33]	.379 [9.63]	2.875 [73.02]	-3	-1
-4	.220 [5.59]	.302 [7.67]	.505 [12.83]	2.750 [69.85]	-4	-2
-6	.312 [7.92]	.427 [10.85]	.619 [15.72]	2.625 [66.67]	-6	-3
-8	.437 [11.10]	.552 [14.02]	.744 [18.90]	2.500 [63.50]	-8	-4
-10	.562 [14.27]	.615 [15.62]	.869 [22.07]	2.375 [60.32]	-10	-5
-12	.625 [15.87]	.740 [18.80]	1.064 [27.03]	2.250 [57.15]	-12	-6
-16	.750 [19.05]	.927 [23.55]	1.314 [33.38]	2.125 [53.97]	-16	-7
-20	.937 [23.80]	1.240 [31.50]	1.596 [40.54]	2.000 [50.80]	-20	-8
-24	1.250 [31.75]	1.365 [34.67]	1.847 [46.91]	1.875 [47.62]	-24	-9
-28	1.375 [34.92]	1.614 [41.00]	2.085 [52.96]	1.750 [44.45]	-28	-10
-32	1.624 [41.25]	1.864 [47.35]	2.335 [59.31]	1.625 [41.27]	-32	-11
-40	1.874 [41.40]	2.364 [47.60]	2.835 [72.01]	1.500 [38.10]	-40	-12

Dimensions are in Inches [mm]

SPACECRAFT COMPONENTS CORP.
3040 Clayton Street
North Las Vegas, NV 89032
Phone: 702.851.7600
Fax: 702.851.7620
Email: salesinfo@spacecraft.com
Web: www.spacecraft.com

MS3057 - 20C

MIL SPEC — **DASH NUMBER**
See Dimension Table below.

MATERIAL: ALUMINUM ALLOY
FINISH: CADMIUM, OLIVE DRAB, 48 HR SALT SPRAY

Note: Bushing can be "telescoped" to achieve a smaller sealing diameter.

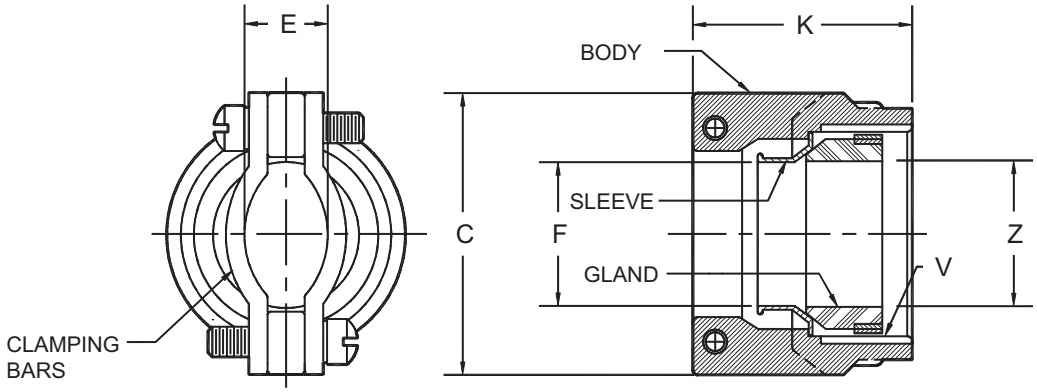

DASH NO.	CONNECTOR SHELL SIZE (REF)	C MAX	E MAX CLOSED	F +.020 -.000 [+0.51] [-0.00]	K MAX	V THREAD CLASS 2B	ØZ APPROX. (GLAND) FREE	ØZ APPROX. (GLAND) CLOSED	BUSHING (REF) (a)
-3C	8S & 10S	.812 [20.62]	.217 [5.51]	.231 [5.87]	1.375 [34.92]	.500-28 UNEF	.219 [5.56]	.031 [0.79]	MS3420-3A
-4C	10SL, 12S & 12	.937 [23.80]	.296 [7.52]	.315 [8.00]	1.375 [34.92]	.625-24 UNEF	.312 [7.92]	.094 [2.39]	MS3420-4A
-6C	14S & 14	1.062 [26.97]	.390 [9.91]	.440 [11.18]	1.375 [34.92]	.750-20 UNEF	.438 [11.13]	.250 [6.35]	MS3420-6A
-8C	16S & 16	1.188 [30.18]	.434 [11.02]	.515 [13.08]	1.375 [34.92]	.875-20 UNEF	.531 [13.49]	.312 [7.92]	MS3420-8A
-10C	18	1.312 [33.32]		.614 [15.60]	1.437 [36.50]	1.000-20 UNEF	.625 [15.87]	.375 [9.52]	MS3420-10A
-12C	20 & 22	1.562 [39.67]	.596 [15.14]	.738 [18.75]	1.437 [36.50]	1.188-20 UNEF	.750 [19.05]	.500 [12.70]	MS3420-12A
-16C	24 & 28	1.750 [44.45]		.926 [23.52]	1.562 [39.67]	1.438-18 UNEF	.938 [23.83]	.594 [15.09]	MS3420-16A
-20C	32	2.250 [57.15]	.858 [21.79]	1.200 [30.48]	1.812 [46.02]	1.750-18 UNS	1.250 [31.75]	.938 [23.83]	MS3420-20A
-24C	36	2.375 [60.32]		1.363 [34.62]	1.812 [46.02]	2.000-18 UNS	1.375 [34.92]	.969 [24.61]	MS3420-24A
-28C	40	2.625 [66.67]	1.107 [28.12]	1.611 [40.92]	2.062 [52.37]	2.250-16 UN	1.625 [41.27]	1.188 [30.18]	MS3420-28A
-32C	44	2.812 [71.42]	1.421 [36.09]	1.865 [47.37]	2.188 [55.58]	2.500-16 UN	1.875 [47.62]	1.375 [34.92]	MS3420-32A

(a) Telescoping bushings are not supplied with clamps.
Dimensions are in Inches [mm]

MS3420-*A

TELESCOPING RUBBER BUSHING

MS3420 - 6 A

MIL SPEC

DASH NUMBER
See Dimension Table below.

MATERIAL
A Neoprene, black.
D Silicone, red.
L Fluorosilicone, blue.

For use with MS3057*C Cable Clamps

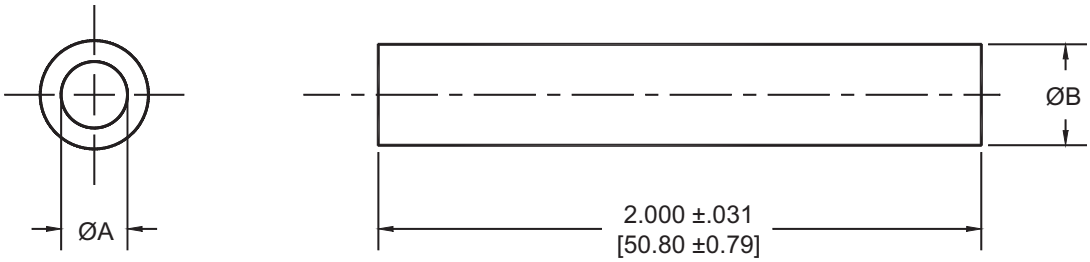

DASH NO.	ØA	ØB	MS3420-*A SUPERSEDES	
			AN3420	MS39057
-3	.125 [3.17]	.210 [5.33]	-3A	-1
-4	.219 [5.56]	.302 [7.67]	-4A	-2
-6	.312 [7.92]	.427 [10.85]	-6A	-3
-8	.438 [11.13]	.531 [13.49]	-8A	-4
-10	.438 [11.13]	.615 [15.62]	-10A	-5
-12	.541 [13.74]	.740 [18.80]	-12A	-6
-16	.750 [19.05]	.927 [23.55]	-16A	-7
-18	.938 [23.83]	1.115 [28.32]	-18A	-8
-20	.938 [23.83]	1.240 [31.50]	-20A	-9
-24	1.125 [28.57]	1.365 [34.67]	-24A	-10
-28	1.250 [31.75]	1.614 [41.00]	-28A	-11
-32	1.625 [41.27]	1.865 [47.37]	-32A	-12
-40	1.875 [47.62]	2.365 [60.07]	-40A	-13

Dimensions are in Inches [mm]

SPACECRAFT COMPONENTS CORP.
3040 Clayton Street
North Las Vegas, NV 89032
Phone: 702.851.7600
Fax: 702.851.7620
Email: salesinfo@spacecraft.com
Web: www.spacecraft.com

DUMMY RECEPTACLE

SCPB05 — 24

BASIC PART NUMBER

SHELL SIZE

MOUNTING CODE
See Table I below.

MATERIAL: Aluminum alloy
FINISH: Cadmium olive drab, 48 hr. salt spray

DRP 19 A 18 S —

SERIES PREFIX

MATING CONNECTOR SERIES CODE
See Table I on page 12D-26 in Catalog 401.

FINISH
See Table II on page 12D-26 in Catalog 401.

MODIFICATION
See Table I below.

GASKET MATERIAL
See Table III on page 12D-26 in catalog 401.

SHELL SIZE
See Table below.

FRONT VIEW

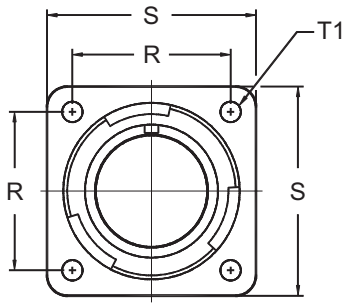

SIDE VIEW

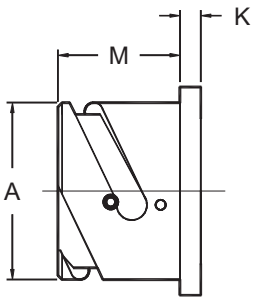

ENVIRONMENTAL WHEN USED WITH A FLANGE SEALING GASKET SCP36675 OR SCP40450

MOUNTING HOLE OPTIONS
See Table I.

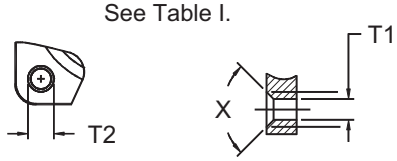

THREADED COUNTERSINK

TABLE I. MOUNTING HOLE CODES

CODE	MOUNTING HOLES TYPE
NONE	THRU HOLES - STANDARD
FF	METRIC THREAD
UN	UNC THREAD
FS	METRIC COUNTERSINK (X=90°)
FSM	UN COUNTERSINK (X=82°)

SHELL SIZE	FRONT VIEW					SIDE VIEW		
	R ±0.1	S ±0.3	T1 +0.1 -0.0	T2 THREAD		A +0.00 -0.15	K ±0.2	M +0.4 -0.0
				METRIC	UNC			
10SL	.717 [18.20]	1.000 [25.40]	.126 [3.20]	M4	8-32UNC	.717 [18.20]	.110 [2.80]	.559 [14.20]
14S	.906 [23.00]	1.181 [30.00]	.126 [3.20]	M4	8-32UNC	.969 [24.60]	.126 [3.20]	.559 [14.20]
16S	.969 [24.60]	1.280 [32.50]	.126 [3.20]	M4	8-32UNC	1.079 [27.40]	.126 [3.20]	.559 [14.20]
16	.969 [24.60]	1.280 [32.50]	.126 [3.20]	M4	8-32UNC	1.079 [27.40]	.126 [3.20]	.748 [19.00]
18	1.063 [27.00]	1.378 [35.00]	.126 [3.20]	M4	8-32UNC	1.213 [30.80]	.157 [4.00]	.748 [19.00]
20	1.157 [29.40]	1.496 [38.00]	.126 [3.20]	M4	8-32UNC	1.346 [34.20]	.157 [4.00]	.748 [19.00]
22	1.252 [31.80]	1.614 [41.00]	.126 [3.20]	M4	8-32UNC	1.472 [37.40]	.157 [4.00]	.748 [19.00]
24	1.374 [34.90]	1.752 [44.50]	.146 [3.70]	M4	10-24UNC	1.610 [40.90]	.157 [4.00]	.811 [20.60]
28	1.563 [39.70]	2.000 [50.80]	.146 [3.70]	M5	10-24UNC	1.839 [46.70]	.157 [4.00]	.811 [20.60]
32	1.752 [44.50]	2.244 [57.00]	.169 [4.30]	M5	1/4-20UNC	2.102 [53.40]	.157 [4.00]	.874 [22.20]
36	1.937 [49.20]	2.500 [63.50]	.169 [4.30]	M5	1/4-20UNC	2.346 [59.60]	.157 [4.00]	.874 [22.20]
40	2.185 [55.50]	2.748 [69.80]	.169 [4.30]	M5	1/4-20UNC	2.579 [65.50]	.157 [4.00]	.874 [22.20]

Dimensions are in Inches [mm]

DCP19 SCPB*TV

DUST CAP FOR PLUG

DCP 19 A 16 S C 08 - 04

DUST CAP STYLE
DCP Dust cap for plug.
DCR Dust cap for receptacle.

MATING CONNECTOR SERIES CODE
See Table I on page 13D-36 in Catalog 401.

FINISH
See Table II on page 13D-36 in Catalog 401.

SHELL SIZE
See Table below.

END FITTING DESIGNATION
See Tables V & VI on page 13D-37 in Catalog 401.

LENGTH OF ATTACHMENT (±.250)
Designate in 1/2" increments.
(Always use two digits. i.e., 08=4 inches, 12=6 inches, etc.)

ATTACHMENT CODE
See Table IV on page 13D-37 in Catalog 401.

GASKET MATERIAL
See Table III on page 13D-36 in Catalog 401.

SCPB 24 TV

SERIES PREFIX

SHELL SIZE
10SL, 12S, 14S, 16, 16S, 18, 20, 22, 24, 32, 36, 40.

CONFIGURATION
TV Dust cap for plug.

MATERIAL: Cap - Aluminum alloy
Chain - Stainless steel
FINISH: Cadmium, olive drab

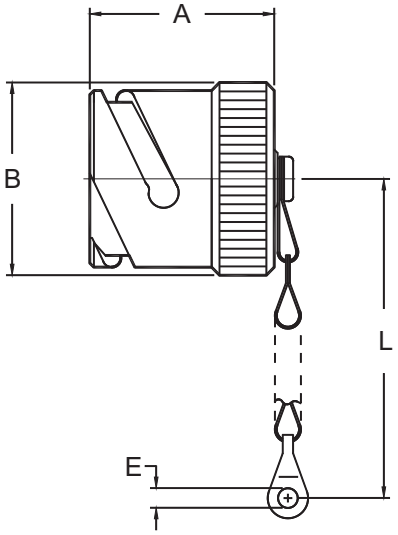

SHELL SIZE	FOR PLUGS SCPB(G) 06, 08, 064, 065				
	PART NUMBER	A MAX.	B MAX.	E +.020 -.010 [+0.5 -0.25]	L APPX.
10SL	SCPB10SLTV	1.142 [29.0]	.827 [21.0]	.173 [4.40]	4.252 [108.0]
12S	SCPB14STV	1.142 [29.0]	1.083 [27.5]	.173 [4.40]	4.843 [123.0]
14S	SCPB16STV	1.142 [29.0]	1.181 [30.0]	.173 [4.40]	4.843 [123.0]
16	SCPB16TV	1.457 [37.0]	1.181 [30.0]	.173 [4.40]	4.843 [123.0]
16S	SCPB18TV	1.457 [37.0]	1.319 [33.5]	.173 [4.40]	4.843 [123.0]
18	SCPB20TV	1.457 [37.0]	1.457 [37.0]	.189 [4.80]	5.433 [138.0]
20	SCPB22TV	1.457 [37.0]	1.575 [40.0]	.189 [4.80]	5.433 [138.0]
22	SCPB24TV	1.457 [37.0]	1.713 [43.5]	.189 [4.80]	5.433 [138.0]
24	SCPB28TV	1.457 [37.0]	1.949 [49.5]	.189 [4.80]	8.110 [206.0]
32	SCPB32TV	1.457 [37.0]	2.205 [56.0]	.220 [5.60]	8.110 [206.0]
36	SCPB36TV	1.457 [37.0]	2.461 [62.5]	.220 [5.60]	8.110 [206.0]
40	SCPB40TV	1.457 [37.0]	2.665 [67.7]	.220 [5.60]	8.110 [206.0]

Dimensions are in Inches [mm]

SPACECRAFT COMPONENTS CORP.
3040 Clayton Street
North Las Vegas, NV 89032
Phone: 702.851.7600
Fax: 702.851.7620
Email: salesinfo@spacecraft.com
Web: www.spacecraft.com

DUST CAP FOR RECEPTACLE

DCR 19 A 16 S C 08 - 04

DUST CAP STYLE
DCP Dust cap for plug.
DCR Dust cap for receptacle.

MATING CONNECTOR SERIES CODE
See Table I on page 13D-36 in Catalog 401.

FINISH
See Table II on page 13D-36 in Catalog 401.

SHELL SIZE
See Table below.

END FITTING DESIGNATION
See Tables V & VI on page 13D-37 in Catalog 401.

LENGTH OF ATTACHMENT (±.250)
Designate in 1/2" increments.
(Always use two digits. i.e., 08=4 inches, 12=6 inches, etc.)

ATTACHMENT CODE
See Table IV on page 13D-37 in Catalog 401.

GASKET MATERIAL
See Table III on page 13D-36 in Catalog 401.

SCPB 20 TF

SERIES PREFIX

SHELL SIZE
10SL, 14S, 16, 16S, 18, 20, 22, 24, 28, 32, 36, 40.

CONFIGURATION
TF Dust cap for receptacle.

MATERIAL: Cap - Aluminum alloy
Gasket/Disk - Neoprene rubber
Chain - Stainless steel
FINISH: Cadmium, olive drab

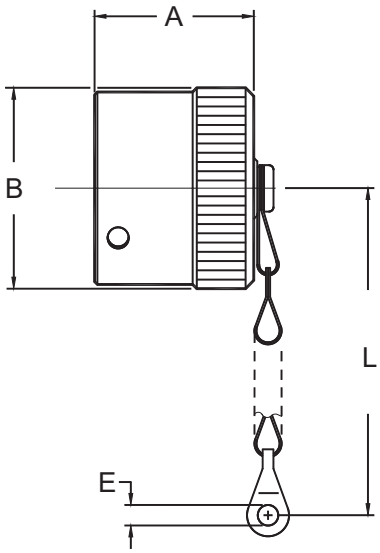

SHELL SIZE	FOR PLUGS SCPB(G) 06, 08, 064, 065				
	PART NUMBER	A MAX.	B MAX.	E +.02 -.01 [+0.5 -0.25]	L APPX.
10SL	SCPB10SLTF	.787 [20.0]	.925 [23.50]	.173 [4.40]	4.252 [108.0]
12S	SCPB14STF	.787 [20.0]	1.201 [30.50]	.173 [4.40]	4.252 [108.0]
14S	SCPB16STF	.787 [20.0]	1.299 [33.00]	.173 [4.40]	4.252 [108.0]
16	SCPB16TF	.984 [25.0]	1.299 [33.00]	.173 [4.40]	4.843 [123.0]
16S	SCPB18TF	.984 [25.0]	1.476 [37.50]	.173 [4.40]	4.843 [123.0]
18	SCPB20TF	.984 [25.0]	1.614 [41.00]	.173 [4.40]	4.843 [123.0]
20	SCPB22TF	.984 [25.0]	1.732 [44.00]	.173 [4.40]	4.843 [123.0]
22	SCPB24TF	.984 [25.0]	1.870 [47.50]	.173 [4.40]	4.843 [123.0]
24	SCPB28TF	.984 [25.0]	2.146 [54.50]	.220 [5.60]	8.110 [206.0]
32	SCPB32TF	.984 [25.0]	2.402 [61.00]	.220 [5.60]	8.110 [206.0]
36	SCPB36TF	.984 [25.0]	2.657 [67.50]	.220 [5.60]	8.110 [206.0]
40	SCPB40TF	.984 [25.0]	2.874 [73.00]	.220 [5.60]	8.110 [206.0]

Dimensions are in Inches [mm]

B049AF95

3/4 MOUNT, TYPE II (MEDIUM DUTY) NUT PLATE

B049AF95 - 8 A - A XXX

SERIES PREFIX

SHELL SIZE
See Table I below.

CLASS
See Note 4.

PRIMER COAT
BLANK Without primer coat.
A With primer coat.

METRIC NUT SIZE

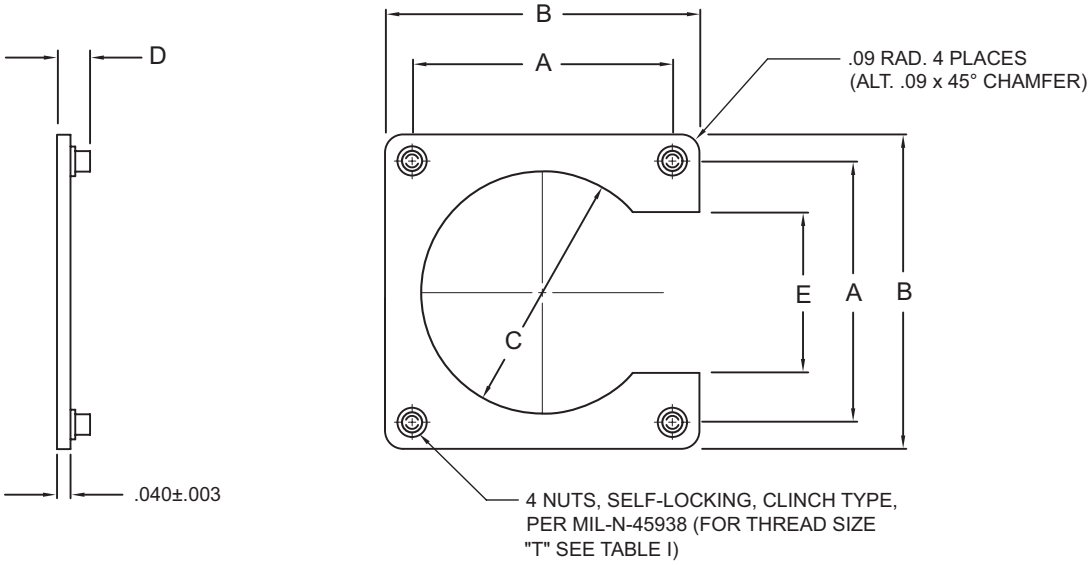

Notes:

1. Dimensions are in inches
2. Unless otherwise specified.
3. Classes represent shell size variances (see Table below).

PART NUMBER B049AF95	SHELL SIZE	CLASS	T THRD UNC-3B	A ±.003 [±0.08]	B ±.015 [±0.38]	C +.015 -.000 [±0.38 -0.0]	D	E +.002 -.030 [±0.05 -0.76]
10	10	A	4-40	.719 [18.26]	1.019 [25.88]	.720 [18.29]	.106/.166 [2.69/4.22]	.433 [11.00]
		B	6-32	.812 [20.62]	1.178 [29.92]	.749 [19.02]	.123/.183 [3.12/4.65]	.433 [11.00]
12	12	A	4-40	.812 [20.62]	1.104 [28.04]	.855 [21.72]	.106/.166 [2.69/4.22]	.530 [13.46]
		B	6-32	.938 [23.83]	1.312 [33.32]	.938 [23.83]	.123/.183 [3.12/4.65]	.526 [13.36]
14	14	A	4-40	.906 [23.01]	1.198 [30.43]	.984 [24.99]	.106/.166 [2.69/4.22]	.624 [15.85]
		B	6-32	1.031 [26.19]	1.406 [35.71]	1.031 [26.19]	.123/.183 [3.12/4.65]	.620 [15.75]
16	16	A	4-40	.969 [24.61]	1.280 [32.51]	1.094 [27.79]	.106/.166 [2.69/4.22]	.687 [17.45]
		B	6-32	1.125 [28.58]	1.500 [38.10]	1.125 [28.58]	.123/.183 [3.12/4.65]	.683 [17.35]
18	18	A	4-40	1.062 [26.97]	1.406 [35.71]	1.220 [30.99]	.106/.166 [2.69/4.22]	.780 [19.81]
		B	6-32	1.203 [30.56]	1.578 [40.08]	1.234 [31.34]	.123/.183 [3.12/4.65]	.776 [19.71]
20	20	A	4-40	1.156 [29.36]	1.535 [38.99]	1.345 [34.16]	.106/.166 [2.69/4.22]	.874 [22.20]
		B	6-32	1.297 [32.94]	1.688 [42.88]	1.359 [34.52]	.123/.183 [3.12/4.65]	.865 [21.97]
22	22	A	4-40	1.250 [31.75]	1.665 [42.29]	1.478 [37.54]	.106/.166 [2.69/4.22]	.968 [24.59]
		B	6-32	1.375 [34.93]	1.738 [44.15]	1.483 [37.67]	.123/.183 [3.12/4.65]	.907 [23.04]
24	24	A	6-32	1.500 [38.10]	1.891 [48.03]	1.560 [39.62]	.123/.183 [3.12/4.65]	1.000 [25.40]
		B	6-32	1.375 [34.93]	1.785 [45.34]	1.595 [40.51]	.123/.183 [3.12/4.65]	1.031 [26.19]
28	28	A	6-32	1.562 [39.67]	2.000 [50.80]	1.820 [46.23]	.123/.183 [3.12/4.65]	1.125 [28.58]
32	32	A	6-32	1.750 [44.45]	2.312 [58.72]	2.062 [52.37]	.123/.183 [3.12/4.65]	1.188 [30.18]
36	36	A	6-32	1.938 [49.23]	2.500 [63.50]	2.312 [58.72]	.123/.183 [3.12/4.65]	1.375 [34.93]

Dimensions are in Inches [mm]

SPACECRAFT COMPONENTS CORP.
3040 Clayton Street
North Las Vegas, NV 89032
Phone: 702.851.7600
Fax: 702.851.7620
Email: salesinfo@spacecraft.com
Web: www.spacecraft.com

B049AF95 METRIC NUT PLATE

3/4 MOUNT, TYPE II (MEDIUM DUTY) NUT PLATE

PART NUMBER	SHELL SIZE	T THREAD	A ±.003 [±0.08]	B ±.016 [±0.41]	C +.001 -.000 [+0.03 -0.00]	D	E ±.020 [±0.51]
B049AF95-10SLA-A-M2.5	10SL	M2.5 x 0.45	.719 [18.26]	1.019 [25.88]	.688 [17.47]	.102/.165 [2.60/4.20]	.433 [11.00]
B049AF95-10SLA-A-M3	10SL	M3 x 0.5	.719 [18.26]	1.019 [25.88]	.688 [17.47]	.106/.165 [2.70/4.20]	.433 [11.00]
B049AF95-14SA-A-M2.5	14S	M2.5 x 0.45	.906 [23.01]	1.192 [30.28]	.953 [24.20]	.102/.165 [2.60/4.20]	.620 [15.75]
B049AF95-14SA-A-M3	14S	M3 x 0.5	.906 [23.01]	1.192 [30.28]	.953 [24.20]	.106/.165 [2.70/4.20]	.620 [15.75]
B049AF95-16SA-A-M2.5	16S	M2.5 x 0.45	.969 [24.61]	1.255 [31.87]	1.094 [27.78]	.102/.165 [2.60/4.20]	.683 [17.34]
B049AF95-16SA-A-M3	16S	M3 x 0.5	.969 [24.61]	1.255 [31.87]	1.094 [27.78]	.106/.165 [2.70/4.20]	.683 [17.34]
B049AF95-16SA-A-M2.5	16S	M2.5 x 0.45	.969 [24.61]	1.255 [31.87]	1.094 [27.78]	.102/.165 [2.60/4.20]	.683 [17.34]
B049AF95-16-A-A-M3	16	M3 x 0.5	.969 [24.61]	1.255 [31.87]	1.094 [27.78]	.106/.165 [2.70/4.20]	.683 [17.34]
B049AF95-18A-A-M2.5	18	M2.5 x 0.45	1.062 [26.97]	1.348 [34.24]	1.185 [30.10]	.102/.165 [2.60/4.20]	.776 [19.71]
B049AF95-18A-A-M3	18	M3 x 0.5	1.062 [26.97]	1.348 [34.24]	1.185 [30.10]	.106/.165 [2.70/4.20]	.776 [19.71]
B049AF95-20A-A-M2.5	20	M2.5 x 0.45	1.156 [29.36]	1.500 [38.10]	1.305 [33.15]	.102/.165 [2.60/4.20]	.865 [21.97]
B049AF95-20A-A-M3	20	M3 x 0.5	1.156 [29.36]	1.500 [38.10]	1.305 [33.15]	.106/.165 [2.70/4.20]	.865 [21.97]
B049AF95-22A-A-M2.5	22	M2.5 x 0.45	1.250 [31.75]	1.593 [40.46]	1.428 [36.27]	.102/.165 [2.60/4.20]	.907 [23.04]
B049AF95-22A-AM3	22	M3 x 0.5	1.250 [31.75]	1.593 [40.46]	1.428 [36.27]	.106/.165 [2.70/4.20]	.907 [23.04]
B049AF95-24A-A-M3.5	24	M3 x 0.5	1.375 [34.93]	1.750 [44.45]	1.560 [39.62]	.106/.165 [2.70/4.20]	1.000 [25.40]
B049AF95-28A-A-M3	28	M3 x 0.5	1.562 [39.67]	2.000 [50.80]	1.820 [46.23]	.106/.165 [2.70/4.20]	1.125 [28.58]
B049AF95-28A-A-M4	28	M4 x 0.7	1.562 [39.67]	2.000 [50.80]	1.820 [46.23]	.138/.197 [3.50/5.00]	1.125 [28.58]
B049AF95-32A-A-M4	32	M4 x 0.7	1.750 [44.45]	2.312 [58.73]	2.062 [52.37]	.138/.197 [3.50/5.00]	1.188 [30.18]
B049AF95-36A-A-M4	36	M4 x 0.7	1.938 [49.23]	2.500 [63.50]	2.312 [58.72]	.138/.197 [3.50/5.00]	1.375 [34.93]
B049AF95-40A-A-M3.5	40	M3 x 0.5	2.188 [55.58]	2.925 [74.30]	2.675 [67.95]	.106/.165 [2.70/4.20]	1.500 [38.10]
B049AF95-40A-A-M4	40	M4 x 0.7	2.188 [55.58]	2.925 [74.30]	2.675 [67.95]	.138/.197 [3.50/5.00]	1.500 [38.10]

Dimensions are in Inches [mm]

RIGHT ANGLE MOUNTING BRACKET

SCPB90 SERIES

SCPB 90 - 16 (024)

SERIES PREFIX

STYLE

SHELL SIZE
10SL, 14S, 16S, 16, 18, 20, 22, 24, 28, 32, 36, 40.

FINISH
BLANK Cadmium olive drab.
(024) Zinc colbalt, olive drab color.
(025) Zinc colbalt, black color.

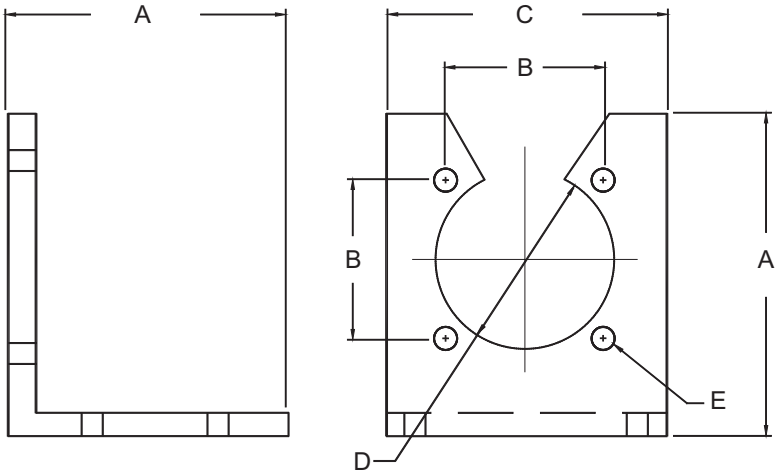

SHELL SIZE	A ±.010 [±0.25]	B ±.004 [±0.10]	C ±.004 [±0.10]	D ±.004 [±0.10]	E ±.006 [+0.15]
10SL	1.500 [38.10]	.717 [18.21]	1.500 [38.10]	.687 [17.45]	.126 [3.20]
14S	1.875 [47.63]	.906 [23.01]	1.500 [38.10]	.937 [23.80]	.126 [3.20]
16S	1.875 [47.63]	.969 [24.61]	1.500 [38.10]	1.032 [26.21]	.126 [3.20]
16	1.875 [47.63]	.969 [24.61]	1.500 [38.10]	1.032 [26.21]	.126 [3.20]
18	2.125 [53.97]	1.062 [26.97]	2.000 [50.80]	1.160 [29.46]	.126 [3.20]
20	2.250 [57.15]	1.158 [29.41]	2.000 [50.80]	1.311 [33.30]	.126 [3.20]
22	2.250 [57.15]	1.252 [31.80]	2.000 [50.80]	1.437 [36.50]	.126 [3.20]
24	2.375 [60.33]	1.374 [34.90]	2.000 [50.80]	1.587 [40.31]	.152 [3.86]
28	2.625 [66.68]	1.563 [39.70]	2.500 [63.50]	1.875 [47.62]	.152 [3.86]
32	2.750 [69.85]	1.752 [44.50]	2.500 [63.50]	2.062 [52.37]	.175 [4.45]
36	3.000 [76.20]	1.937 [49.20]	3.000 [76.20]	2.375 [60.32]	.175 [4.45]
40	3.250 [82.55]	2.189 [55.60]	3.000 [76.20]	2.579 [65.50]	.175 [4.45]

Dimensions are in Inches [mm]

SPACECRAFT COMPONENTS CORP.
3040 Clayton Street
North Las Vegas, NV 89032
Phone: 702.851.7600
Fax: 702.851.7620
Email: salesinfo@spacecraft.com
Web: www.spacecraft.com

SCP40450, SCP40460

GASKETS FOR FLANGE MOUNT RECEPTACLES

For **SCP, SWL & SWLD** Series (AS50151 Threaded & Reverse Bayonet Coupling), MIL-DTL-22992

SCP40450 - 20 H

PART NUMBER

SHELL SIZE

MATERIAL

- **BLANK** Neoprene 80 shore.
- **F** Silicone.
- **FS** Silicone with shielded wire mesh.
- **H** Halogen-free.
- **S** Shielded, wire mesh.

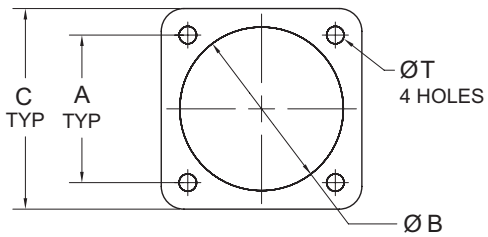

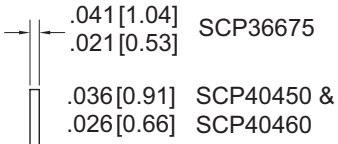

AS50151 SHELL TYPES: MS3100*, MS3102*, MS3103*, SCP00*, SCP02*, TBF* FRONT PANEL MOUNT	AS50151 REVERSE BAYONET SHELL TYPES: SCPB00*, SCPB02*, SCPB020*, SCPBTBF* FRONT PANEL MOUNT	AS50151 REVERSE BAYONET SHELL TYPES: SCPB03*, SCPB030* REAR PANEL MOUNT	SWL SERIES SHELL TYPES: SCP1070*, SCP1072*, SCP1074*, SCP1079* FRONT PANEL MOUNT	SWLD SERIES SHELL TYPES: SCP17343, SCP17346 FRONT PANEL MOUNT	PART NUMBER (-67°F TO -278°F)	PART NUMBER (0°F TO +257°F) NOTE 2	A ±.010	B +.016 -.000	C +.016 -.000	ØT ±.010	Alternate Part # (See page 13D-2)
8S	–	–	–	–	SCP36675-8	SCP40450-8	.594 [15.09]	.500 [12.70]	.875 [22.23]	.172 [4.37]	930-0890-XXX
10S.10SL	10SL	–	10	–	SCP36675-10	SCP40450-10	.719 [18.26]	.626 [15.90]	1.000 [25.40]	.172 [4.37]	930-1090-XXX
–		10SL	–	–		SCP40460-10	.719 [18.26]	.717 [18.21]	1.000 [25.40]	.172 [4.37]	930-1091-XXX
12.12S	12S	–	12	–	SCP36675-12	SCP40450-12	.813 [20.65]	.750 [19.05]	1.094 [27.79]	.172 [4.37]	930-1290-XXX
–	–	12.12S	–	–		SCP40460-12	.813 [20.65]	.843 [21.40]	1.094 [27.79]	.172 [4.37]	930-1291-XXX
14.14S	14S	–	14	12	SCP36675-14	SCP40450-14	.906 [23.01]	.875 [22.23]	1.188 [30.18]	.172 [4.37]	930-1490-XXX
–	–	14.14S	–	–		SCP40460-14	.906 [23.01]	.968 [24.60]	1.188 [30.18]	.172 [4.37]	930-1491-XXX
16.16S	16S	–	16	14	SCP36675-16	SCP40450-16	.969 [24.60]	1.000 [25.40]	1.281 [32.54]	.172 [4.37]	930-1690-XXX
–	–	16.16S	–	–		SCP40460-16	.969 [24.60]	1.081 [27.40]	1.281 [32.54]	.172 [4.37]	930-1691-XXX
18	18	–	18	16	SCP36675-18	SCP40450-18	1.062 [27.00]	1.125 [28.58]	1.375 [34.93]	.203 [5.16]	930-1890-XXX
–	–	18	–	–		SCP40460-18	1.062 [27.00]	1.213 [30.80]	1.375 [34.93]	.203 [5.16]	930-1891-XXX
20	20	–	20	18	SCP36675-20	SCP40450-20	1.156 [29.36]	1.250 [31.75]	1.500 [38.10]	.203 [5.16]	930-2090-XXX
–	–	20	–	–		SCP40460-20	1.156 [29.36]	1.345 [34.20]	1.500 [38.10]	.203 [5.16]	930-2091-XXX
22	22	–	22	20	SCP36675-22	SCP40450-22	1.250 [31.75]	1.375 [34.93]	1.625 [41.28]	.203 [5.16]	930-2290-XXX
–	–	22	–	–		SCP40460-22	1.250 [31.75]	1.472 [37.40]	1.625 [41.28]	.203 [5.16]	930-2291-XXX
24	24	–	24	22	SCP36675-24	SCP40450-24	1.375 [34.93]	1.500 [38.10]	1.750 [44.45]	.203 [5.16]	930-2490-XXX
–	–	24	–	–		SCP40460-24	1.375 [34.93]	1.610 [40.90]	1.750 [44.45]	.203 [5.16]	930-2491-XXX
28	28	–	28	24	SCP36675-28	SCP40450-28	1.563 [39.70]	1.750 [44.45]	2.000 [50.80]	.203 [5.16]	930-2890-XXX
–	–	28	–	–		SCP40460-28	1.563 [39.70]	1.840 [46.70]	2.000 [50.80]	.203 [5.16]	930-2891-XXX
32	32	–	32	28	SCP36675-32	SCP40450-32	1.750 [44.45]	2.000 [50.80]	2.250 [57.15]	.219 [5.56]	930-3290-XXX
–	–	32	–	–		SCP40460-32	1.750 [44.45]	2.102 [53.40]	2.250 [57.15]	.219 [5.56]	930-3291-XXX
36	36	–	36	32	SCP36675-36	SCP40450-36	1.938 [49.23]	2.188 [55.58]	2.500 [63.50]	.219 [5.56]	930-3690-XXX
–	–	36	–	–		SCP40460-36	1.938 [49.23]	2.345 [59.60]	2.500 [63.50]	.219 [5.56]	930-3691-XXX
40	40	–	40	36	SCP36675-40	SCP40450-40	2.188 [55.58]	2.438 [61.93]	2.750 [69.85]	.219 [5.56]	930-4090-XXX
–	–	40	–	–		SCP40460-40	2.188 [55.58]	2.580 [65.50]	2.750 [69.85]	.219 [5.56]	930-4091-XXX
44	–	–	44	40	SCP36675-44	SCP40450-44	2.375 [60.33]	2.688 [68.28]	3.000 [76.20]	.219 [5.56]	930-4490-XXX
48	–	–	48	44	SCP36675-48	SCP40450-48	2.625 [66.68]	2.938 [74.63]	3.250 [82.55]	.219 [5.56]	930-4890-XXX

1. Dimensions in brackets [ ] are in millimeters.
2. For shielding add "S" after the part number.
3. For silicone material add "FS" after part number

MS25251
SEALING PLUG

MS25251 - 8

MIL SPEC — **DASH NUMBER**
See Dimension Table below.

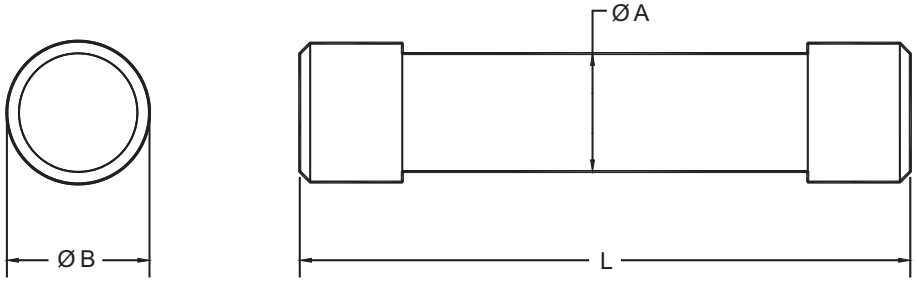

DASH NO.	MAT'L	WIRE SIZE	COLOR	ØA MAX.	ØB MAX.	L MAX.	SUPERSEDED BY REV. L
-8	NYLON	8	WHITE	.200 [5.08]	.235 [5.97]	.479 [12.17]	MS27488-8
-12	NYLON	12	YELLOW	.150 [3.81]	.187 [4.75]	.479 [12.17]	MS27488-12
-16	NYLON	16	BLUE	.115 [2.92]	.152 [3.86]	.479 [12.17]	MS27488-16
-20	NYLON	20	RED	.095 [2.41]	.122 [3.10]	.385 [9.78]	MS27488-20

Dimensions are in Inches [mm]

MS27488 REV L
SEALING PLUG

MS27488 - 4

MIL SPEC — **DASH NUMBER**
See Dimension Table below.

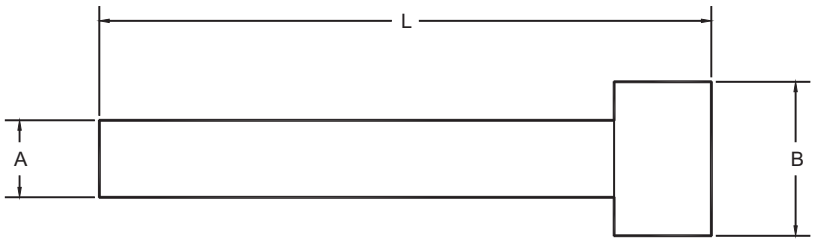

DASH NO.	MAT'L	WIRE SIZE	COLOR	ØA MAX.	ØB MAX.	L MAX.
-0	TEFLON	0	YELLOW	.450 [11.43]	.610 [15.49]	1.010 [25.65]
-4	TEFLON	4	BLUE	.320 [8.13]	.420 [10.67]	.480 [12.19]
-8	TEFLON	8	RED	.195 [4.95]	.320 [8.13]	.480 [12.19]
-12	TEFLON	12	YELLOW	.131 [3.33]	.176 [4.47]	.584 [14.83]
-16	TEFLON	16	BLUE	.093 [2.36]	.138 [3.51]	.584 [14.83]
-20	TEFLON	20	RED	.065 [1.65]	.100 [2.54]	.584 [14.83]
-22	TEFLON	22	BLACK	.045 [1.14]	.068 [1.73]	.500 [12.70]

Dimensions are in Inches [mm]

SPACECRAFT COMPONENTS CORP.
3040 Clayton Street
North Las Vegas, NV 89032
Phone: 702.851.7600
Fax: 702.851.7620
Email: salesinfo@spacecraft.com
Web: www.spacecraft.com

SINGLE HOLE

SINGLE HOLE TERMINAL LUGS

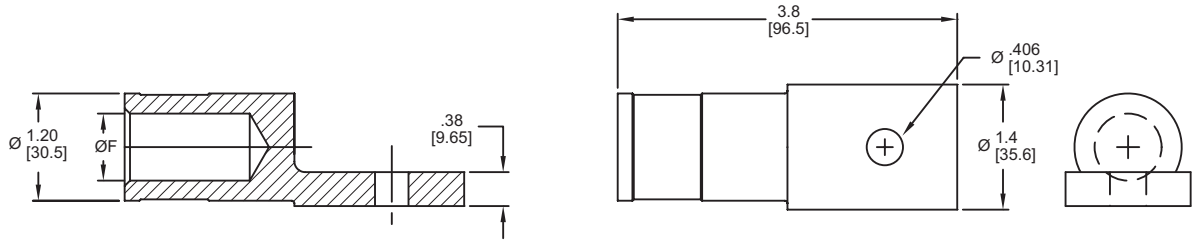

PART NUMBER	CABLE SIZE	ØF
998-9775-996	775/24	.752 [19.10]
998-9925-996	925/24	.813 [20.65]

Dimensions are in Inches [mm]

DOUBLE HOLE

DOUBLE HOLE TERMINAL LUGS

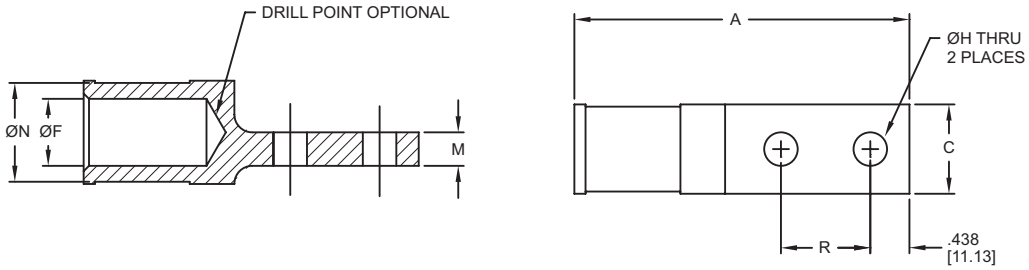

PART NUMBER	CABLE SIZE	A ±.094 [2.39]	C MAX	ØF ±.030 [0.76]	ØH ±.015 [0.38]	M ±.039 [0.99]	N ±.030 [0.76]	R ±.015 [0.38]
SCPMD275	275/24	3.000 [76.20]	.720 [18.29]	.435 [11.05]	.343 [8.71]	.203 [5.16]	.689 [17.50]	.875 [22.23]
SCPMD775	775/24	3.250 [82.55]	1.000 [25.40]	.732 [18.59]	.343 [8.71]	.203 [5.16]	.953 [24.21]	.875 [22.23]
SCPMD1 600	1600/24	3.750 [95.25]	1.380 [35.05]	1.062 [26.97]	.406 [10.31]	.375 [9.53]	1.344 [34.14]	1.000 [25.40]

Dimensions are in Inches [mm]

DOUBLE HOLE/90° FOR 1600/24 WIRE

DOUBLE HOLE TERMINAL LUGS - 90 DEGREE FOR 1600/24 WIRE

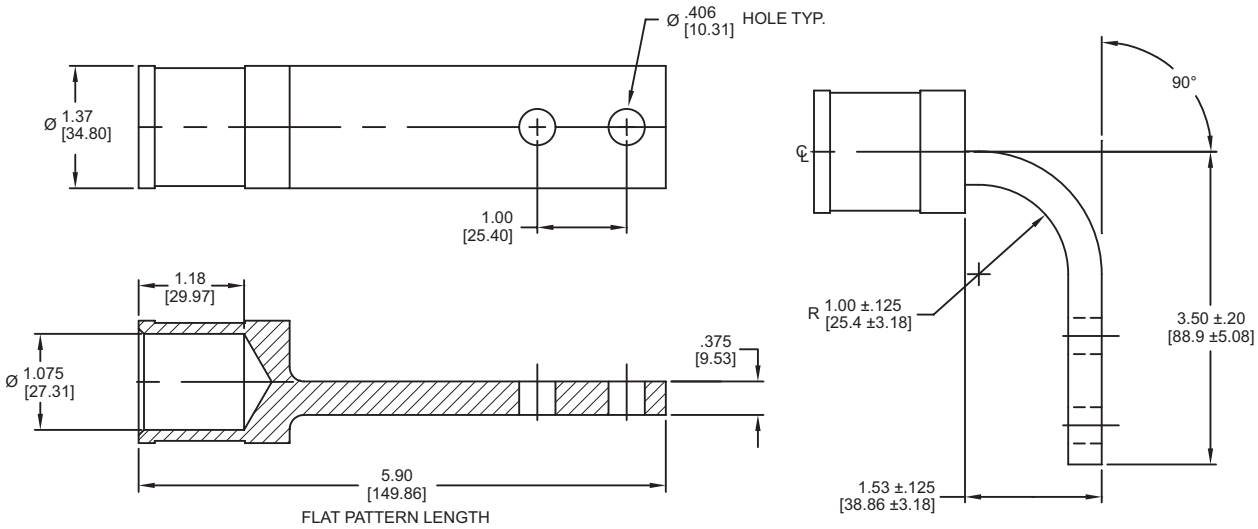

PART NUMBER	CABLE SIZE
998-1 684-994	1600/24

(90° BEND)

6C

SPACECRAFTCOMPONENTSTERMINATIONBANDS

These Bands are commonly used to attach a braid or a shield to a backshell. They come in two shapes: Coiled or flat.

To provide our customers with a cost effective solution, Spacecraft Components now manufactures Termination Bands and is qualified to the M85049/128 specification.

Shown below is a summary of the various bands and their respective tools.

ELECTRO-ADAPTER	SHAPE	SIZE	SCP P/N	MILITARY REFERENCE	MILITARY TOOL	NON MILITARY APPLICATIONS	
						ELECTRO-ADAPTER TOOL	DANIELS TOOL
214LF002	Flat	.245 x 14.0	SCPSE-02F	M85049/128-1	M81306/2-01▲	EAK214-25▲	DBS-1101▲
214L0002	Coiled		SCPSE-02C	M85049/128-2			

BAND-IT®	SHAPE	SIZE	SCP P/N	MILITARY REFERENCE	MILITARY TOOLS	NON MILITARY APPLICATIONS		
						BAND-IT® TOOLS	DANIELS TOOLS	GLENAIR TOOLS
A10089	Flat	.242 x 14.25	SCPBE-02F	M85049/128-3	M81306/1-01●	A40199●	DBS-2100●	600-058●
A10088	Coiled		SCPBE-02C	M85049/128-4				
A11086	Flat	.242 x 18.00	SCPBE-02FL18♦	N/A				
A31189*	Flat	.120 x 8.125	SCPBE-04F	M85049/128-7	M81306/1-02●	A30199●	DBS-2200●	600-061●
A31188*	Coiled		SCPBE-04C	M85049/128-8				
A31089*	Flat	.120 x 14.30	SCPBE-03F	N/A				

* Mini Band
♦ Two-piece construction

GLENAIR	SHAPE	SIZE	SCP P/N	MILITARY REFERENCE	MILITARY TOOLS	NON MILITARY APPLICATIONS		
						GLENAIR TOOLS	BAND-IT® TOOLS	DANIELS TOOLS
600-052	Flat	.242 x 14.25	SCPBE-02F	M85049/128-3	M81306/1-01●	600-058●	A40199●	DBS-2100●
600-052-1	Coiled		SCPBE-02C	M85049/128-4				
600-090	Flat	.242 x 18.0	SCPBE-02FL18♦	N/A	M81306/1-01●	600-058●	A40199●	DBS-2100●
600-090-1	Coiled		SCPBE-02CL18♦					
600-057*	Flat	.120 x 8.125	SCPBE-04F	M85049/128-7	M81306/1-02●	600-061●	A30199●	DBS-2200●
600-057-1*	Coiled		SCPBE-04C	M85049/128-8				
600-083*	Flat	.120 x 14.30	SCPBE-03F	N/A				
600-083-1*	Coiled		SCPBE-03C					

* Mini Band
♦ Two-piece construction

Band-It® and Glenair bands work in the DBS or STS Tools, but two operations are required (terminate and fold-over) rather than the one operation (terminate/trim). DBS or STS-1101, and 1201 tools include both the termination tool and the secondary roll-over tool.

SUNBANK	SHAPE	SIZE	SCP P/N	MILITARY REFERENCE	MILITARY TOOLS	NON MILITARY APPLICATIONS	
						SUNBANK TOOLS	DANIELS TOOLS
S 3175F2	Flat	.245 x 14.00	SCPSE-02F	M85049/128-1	M81306/2-01▲	STS-1101▲	DBS-1101▲
S 3175-2	Coiled		SCPSE-02C	M85049/128-2			
S 3175F3*	Flat	.118 x 14.25	SCPSE-03F	N/A	M81306/2-02▲	STS-1201▲	DBS-1201▲
S 3175-3*	Coiled		SCPSE-03C				
S 3175F4*	Flat	.118 x 9.50	SCPSE-04F	M85049/128-5	M81306/2-02▲	STS-1201▲	DBS-1201▲
S 3175-4*	Coiled		SCPSE-04C	M85049/128-6			

* Mini Band
DBS or STS-1101 and 1201 tools include both the termination tool and the secondary roll-over tool.

MILITARY REFERENCE

MILITARY	SHAPE	SIZE	SCP P/N	MILITARY TOOLS	NON MILITARY APPLICATIONS			
					Band-It®	Daniels	Glenair	Sunbank
M85049/128-1	Flat	.245 x 14.00	SCPSE-02F	M81306/2-01▲	–	DBS-1101▲	–	STS-1101▲
M85049/128-2	Coiled		SCPSE-02C					
M85049/128-3	Flat	.245 x 14.25	SCPBE-02F	M81306/1-01●	A40199●	DBS-2100●	600-058●	–
M85049/128-4	Coiled		SCPBE-02C					
M85049/128-5	Flat	.118 x 9.50	SCPSE-04F	M81306/2-02▲	–	DBS-1201▲	–	STS-1201▲
M85049/128-6	Coiled		SCPSE-04C					
M85049/128-7	Flat	.115 x 8.125	SCPBE-04F	M81306/1-02●	A30199●	DBS-2200●	600-061●	–
M85049/128-8	Coiled		SCPBE-04C					

● One Step Tool
▲ Two Step Tool

® Band-It® is a registered trademark of Band-It-IDEX, Inc., a division of IDEX Corporation, of which Spacecraft Components Corp. is not affiliated.

SPACECRAFT COMPONENTS CORP.
3040 Clayton Street
North Las Vegas, NV 89032
Phone: 702.851.7600
Fax: 702.851.7620
Email: salesinfo@spacecraft.com
Web: www.spacecraft.com

MINI-BANDS (.115 WIDE)

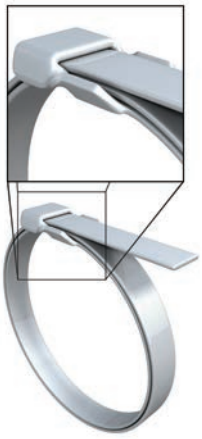

M85049/128-8

M85049/128-5 & M85049/128-6
SCPSE-04F & SCPSE-04C
TERMINATION TOOLS:
DANIELS': DBS-1201▲
SUNBANK: STS-1201▲
M81306/2-02▲

M85049/128-7 & M85049/128-8
SCPBE-04F & SCPBE-04C
TERMINATION TOOLS:
BAND-IT®: A30199●
DANIELS: DBS-2200●
GLENAIR: 600-061●
M81306/1-02●

● One Step Tool
▲ Two Step Tool

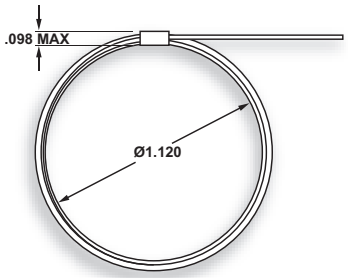

M85049/128-6*
SCPSE-04C

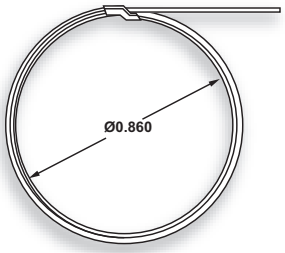

M85049/128-8*
SCPBE-04C

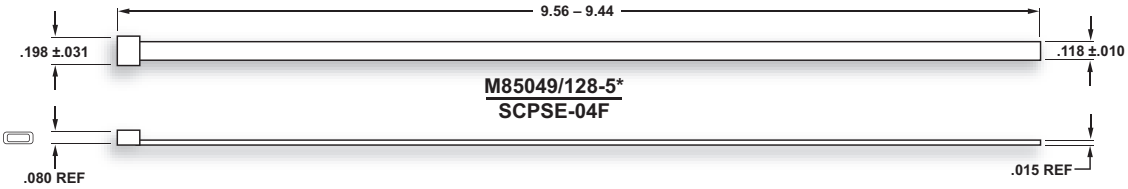

* M85049/128-5, -6, -7, -8 are proposed.

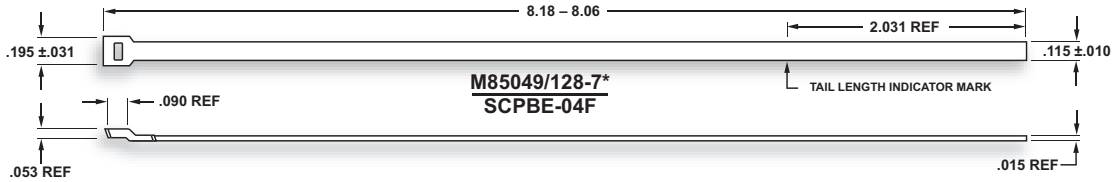

MINI-BANDS (.115 WIDE)

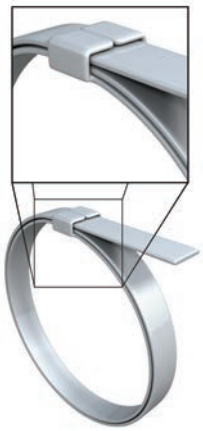

SCPSE-03F & SCPSE-03C
TERMINATION TOOLS:
DANIELS': DBS-1201▲
SUNBANK: STS-1201▲
M81306/2-02▲

▲ Two Step Tool

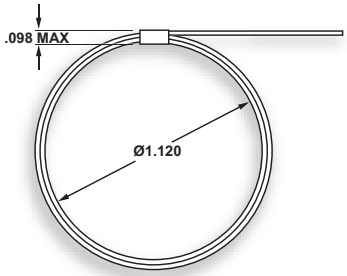

SCPSE-03C

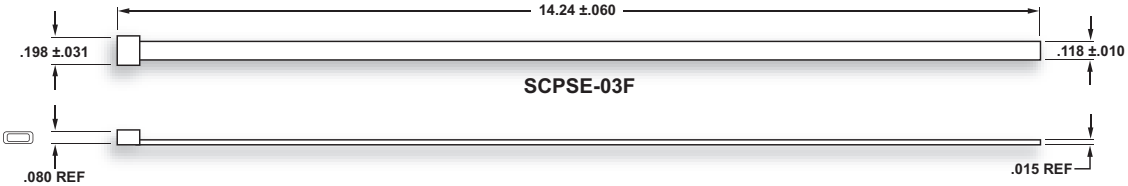

® Band-It® is a registered trademark of Band-It-IDEX, Inc., a division of IDEX Corporation, of which Spacecraft Components Corp. is not affiliated.

M85049/128

QUARTER-INCH TERMINATION BANDS (.245 WIDE)

M85049/128-2

M85049/128-1 & M85049/128-2
SCPSE-02F & SCPSE-02C
TERMINATION TOOLS:
DANIELS': DBS-1101▲
SUNBANK: STS-1101▲
M81306/2-01▲

M85049/128-3 & M85049/128-4
SCPBE-02F & SCPBE-02C
TERMINATION TOOLS:
BAND-IT®: A40199●
DANIELS: DBS-2100●
GLENAIR: 600-058●
M81306/1-01●

● One Step Tool
▲ Two Step Tool

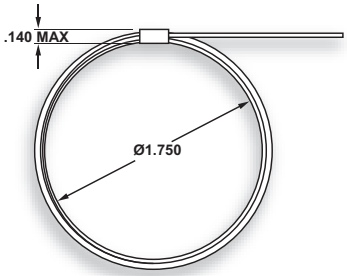

M85049/128-2
SCPSE-02C

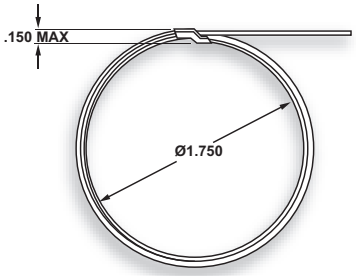

M85049/128-4
SCPBE-02C

M85049/128-4

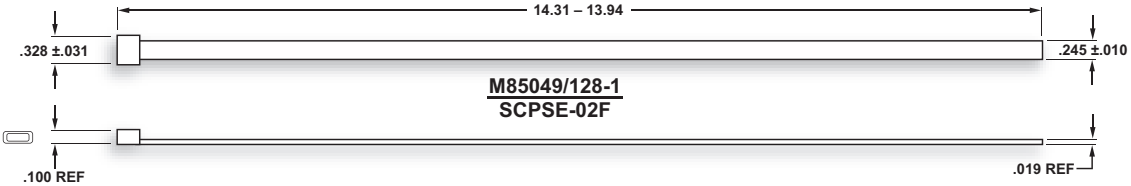

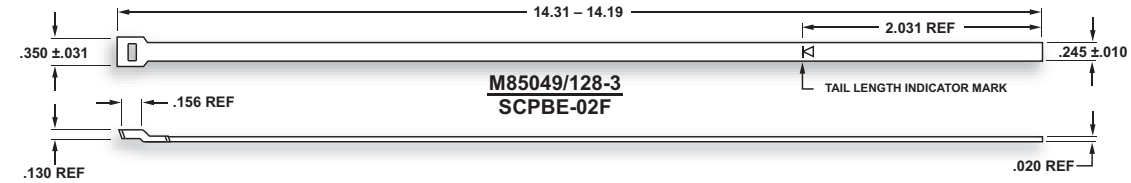

SPACECRAFT COMPONENTS CORP.
3040 Clayton Street
North Las Vegas, NV 89032
Phone: 702.851.7600
Fax: 702.851.7620
Email: salesinfo@spacecraft.com
Web: www.spacecraft.com

SECTION 7C
CROSS REFERENCE/INDEX

CROSS REFERENCE/INDEX

A12-4★★★-★	Size 8 Coaxial Pin Contact	3C-11
ABCIR00★	Reverse Bayonet Wall Mount Receptacle (SCPB00★)	1C-4
ABCIR01★	Reverse Bayonet In-Line Receptacle (SCPB01★)	1C-4
ABCIR02★	Reverse Bayonet Box Mount Receptacle (SCPB02★)	1C-4
ABCIR03★	Reverse Bayonet Box Mount Receptacle (SCPB03★)	1C-4
ABCIR05★	Reverse Bayonet Dummy Receptacle (SCPB05★)	1C-4
ABCIR06★	Reverse Bayonet Straight Plug (SCPB06★)	1C-4
ABCIR07★	Reverse Bayonet Jam Nut Receptacle (SCPB07★)	1C-4
ABCIR08★	Reverse Bayonet 90 Degree Plug (SCPB08★)	1C-4
ABCIR020★	Reverse Bayonet Wall Mount Receptacle (SCPB020★)	1C-4
ABCIR030★	Reverse Bayonet Wall Mount Receptacle (SCPB030★)	1C-4
ABCIR038★	Reverse Bayonet 90 DegreeWall Mount Receptacle (SCPB038★)	1C-4
ABCIR064★	Reverse Bayonet Panel Mount Plug (SCPB064★)	1C-4
ABCIR065★	Reverse Bayonet Straight Plug (SCPB065★)	1C-4
ABCIR070★	Reverse Bayonet Jam Nut Receptacle (SCPB070★)	1C-4
ABCIRTB★	Reverse Bayonet Thru-Bulkhead Receptacle (SCPBTB★)	1C-4
ACC00★	Reverse Bayonet Wall Mount Receptacle (SCPB00★F80)	1C-4
ACC01★	Reverse Bayonet In-Line Receptacle (SCPB01★ F80)	1C-4
ACC06★	Reverse Bayonet Straight Plug (SCPB06★ F80)	1C-4
ACC08★	Reverse Bayonet 90 Degree Plug (SCPB08★ F80)	1C-4
ACS00★	Reverse Bayonet Wall Mount Receptacle (SCPB00★)	1C-4
ACS01★	Reverse Bayonet In-Line Receptacle (SCPB01★)	1C-4
ACS06★	Reverse Bayonet Straight Plug (SCPB06★)	1C-4
ACS08★	Reverse Bayonet 90 Degree Plug (SCPB08★)	1C-4
AS95234	Reverse Bayonet Connectors	IV
B049AF95	Nut Plate, ¾ Mount	6C-10
BFILA	Conduit	1C-31
BFILB	Conduit	1C-30 & 31
BFILJ	Conduit	1C-30
BFILM	Conduit	1C-30 & 31
BVIRA	Conduit	1C-30 & 31
BVIVG	Conduit	1C-30 & 31
CA00COM★B	Reverse Bayonet Wall Mount Receptacle (SCPB00★)	1C-4
CA01COM★B	Reverse Bayonet In-Line Receptacle (SCPB01★)	1C-4
CA02COM★B	Reverse Bayonet Box Mount Receptacle (SCPB02★)	1C-4
CA06COM★B	Reverse Bayonet Straight Plug (SCPB06★)	1C-4
CA20COM★B	Reverse Bayonet Box Mount Receptacle (SCPB03★)	1C-4
CA3100★-B	Reverse Bayonet Wall Mount Receptacle (SCPBS00★)	1C-4
CA3101★-B	Reverse Bayonet In-Line Receptacle (SCPBS01★)	1C-4
CA3102★-B	Reverse Bayonet Wall Mount Receptacle (SCPBS02★)	1C-4
CA3106★-B	Reverse Bayonet Straight Plug (SCPBS06★)	1C-4
CA3108★-B	Reverse Bayonet 90 Degree Plug (SCPBS08★)	1C-4
CAR0★-B	Reverse Bayonet Wall Mount Receptacle (SCPB00★)	1C-4
CAR1★-B	Reverse Bayonet In-Line Receptacle (SCPB01★)	1C-4
CAR2★-B	Reverse Bayonet Box Mount Receptacle (SCPB02★)	1C-4
CAR3★-B	Reverse Bayonet Box Mount Receptacle (SCPB03★)	1C-4
CAR6★-B	Reverse Bayonet Straight Plug (SCPB06★)	1C-4
CAR8★-B	Reverse Bayonet 90 Degree Plug (SCPB08★)	1C-4
CAR20★-B	Reverse Bayonet Wall Mount Receptacle (SCPB020★)	1C-4
CAR30★-B	Reverse Bayonet Wall Mount Receptacle (SCPB030★)	1C-4
CATBF★-B	Reverse Bayonet Thru-Bulkhead Receptacle (SCPBTB★)	1C-4
CIR00★	Reverse Bayonet Wall Mount Receptacle (SCPB00★)	1C-4
CIR01★	Reverse Bayonet In-Line Receptacle (SCPB01★)	1C-4
CIR02★	Reverse Bayonet Box Mount Receptacle (SCPB02★)	1C-4
CIR03★	Reverse Bayonet Box Mount Receptacle (SCPB03★)	1C-4
CIR06★	Reverse Bayonet Straight Plug (SCPB06★)	1C-4
CIR07★	Reverse Bayonet Jam Nut Receptacle (SCPB07★)	1C-4
CIR08★	Reverse Bayonet 90 Degree Plug (SCPB08★)	1C-4
CIR020★	Reverse Bayonet Wall Mount Receptacle (SCPB020★)	1C-4
CIR030★	Reverse Bayonet Wall Mount Receptacle (SCPB030★)	1C-4
CIR038★	Reverse Bayonet Wall Mount Receptacle (SCPB038★)	1C-4
CIR064★	Reverse Bayonet Panel Mount Plug (SCPB064★)	1C-4
CIR065★	Reverse Bayonet Straight Plug (SCPB065★)	1C-4
CIR070★	Reverse Bayonet Jam Nut Receptacle (SCPB070★)	1C-4
CIRTB★	Reverse Bayonet Thru-Bulkhead Receptacle (SCPBTB★)	1C-4
CS0E19FP★	Panel Mount Receptacle	1C-92
CS0E19FV★	In-Line Receptacle	1C-92

★ Indicates additional alpha-numerics are required to complete part number

SPACECRAFT COMPONENTS CORP.
3040 Clayton Street
North Las Vegas, NV 89032
Phone: 702.851.7600
Fax: 702.851.7620
Email: salesinfo@spacecraft.com
Web: www.spacecraft.com

CS0E19MP★	Panel Mount Plug	1C-92
CS0E19MV★	Straight Plug	1C-92
CS0X19FP★	Panel Mount Receptacle	1C-92
CS0X19FV★	In-Line Receptacle	1C-92
CS0X19MP★	Panel Mount Plug	1C-92
CS0X19MV★	Straight Plug	1C-92
D12-4★★★-★	Size 8 Coaxial Socket Contact	3C-11
DCP19*	Dust Cup for Plug	6C-8
DCR19*	Dust Cap for Receptacle	6C-9
DRP19*	Dummy Receptacle	6C-7
FRITS02PP	Reverse Bayonet Thru-Bulkhead Receptacle (SCPBTB-*)	1C-4
FRITS3100A	Reverse Bayonet Wall Mount Receptacle (SCPBH00A)	1C-4
FRITS3100F	Reverse Bayonet Wall Mount Receptacle (SCPBH00LF)	1C-4
FRITS3100G	Reverse Bayonet Wall Mount Receptacle (SCPBH00G)	1C-4
FRITS3100GR	Reverse Bayonet Wall Mount Receptacle (SCPBH00G2G)	1C-4
FRITS3100R	Reverse Bayonet Wall Mount Receptacle (SCPBH00R)	1C-4
FRITS3100RS	Reverse Bayonet Wall Mount Receptacle (SCPBH00RV)	1C-4
FRITS3100SP	Reverse Bayonet Wall Mount Receptacle (SCPBH00SB)	1C-4
FRITS3101A	Reverse Bayonet In-Line Receptacle (SCPBH01A)	1C-4
FRITS3101F	Reverse Bayonet In-Line Receptacle (SCPBH01LF)	1C-4
FRITS3101G	Reverse Bayonet In-Line Receptacle (SCPBH01G)	1C-4
FRITS3101GR	Reverse Bayonet In-Line Receptacle (SCPBH01G2G)	1C-4
FRITS3101R	Reverse Bayonet In-Line Receptacle (SCPBH01R)	1C-4
FRITS3101RS	Reverse Bayonet In-Line Receptacle (SCPBH01RV)	1C-4
FRITS3101SP	Reverse Bayonet In-Line Receptacle (SCPBH01SB)	1C-4
FRITS3102A	Reverse Bayonet Box Mount Receptacle (SCPBH02R)	1C-4
FRITS3102E	Reverse Bayonet Box Mount Receptacle (SCPBH02R)	1C-4
FRITS3102R	Reverse Bayonet Box Mount Receptacle (SCPBH02R)	1C-4
FRITS3102Y	Reverse Bayonet Box Mount Receptacle (SCPBH02YM)	1C-4
FRITS31030A	Reverse Bayonet Wall Mount Receptacle (SCPBH030A)	1C-4
FRITS31030F	Reverse Bayonet Wall Mount Receptacle (SCPBH030LF)	1C-4
FRITS31030G	Reverse Bayonet Wall Mount Receptacle (SCPBH030G)	1C-4
FRITS31030GR	Reverse Bayonet Wall Mount Receptacle (SCPBH030G2G)	1C-4
FRITS31030RS	Reverse Bayonet Wall Mount Receptacle (SCPBH030RV)	1C-4
FRITS31030SP	Reverse Bayonet Wall Mount Receptacle (SCPBH030SB)	1C-4
FRITS3103A	Reverse Bayonet Box Mount Receptacle (SCPBH030R)	1C-4
FRITS3103R	Reverse Bayonet Box Mount Receptacle (SCPBH03R)	1C-4
FRITS3103Y	Reverse Bayonet Box Mount Receptacle (SCPBH03YM)	1C-4
FRITS3106A	Reverse Bayonet Straight Plug (SCPBH06A)	1C-4
FRITS3106F	Reverse Bayonet Straight Plug (SCPBH06LF)	1C-4
FRITS3106G	Reverse Bayonet Straight Plug (SCPBH06G)	1C-4
FRITS3106GR	Reverse Bayonet Straight Plug (SCPBH06G2G)	1C-4
FRITS3106RS	Reverse Bayonet Straight Plug (SCPBH06RV)	1C-4
FRITS3106SP	Reverse Bayonet Straight Plug (SCPBH06SB)	1C-4
FRITS31070A	Reverse Bayonet Jam Nut Receptacle (SCPBH070R)	1C-4
FRITS31070R	Reverse Bayonet Jam Nut Receptacle (SCPBH070R)	1C-4
FRITS31078A	Reverse Bayonet Wall Mount Receptacle (SCPBH038A)	1C-4
FRITS31078R	Reverse Bayonet Wall Mount Receptacle (SCPBH038R)	1C-4
FRITS3107A	Reverse Bayonet Jam Nut Receptacle (SCPBH07R)	1C-4
FRITS3107R	Reverse Bayonet Jam Nut Receptacle (SCPBH07R)	1C-4
FRITS3108A	Reverse Bayonet 90 Degree Plug (SCPBH07R)	1C-4
FRITS3108F	Reverse Bayonet 90 Degree Plug (SCPBH08F)	1C-4
FRITS3108GR	Reverse Bayonet 90 Degree Plug (SCPBH08G)	1C-4
FRITS3108R	Reverse Bayonet 90 Degree Plug (SCPBH08R)	1C-4
FRITS3108SP	Reverse Bayonet 90 Degree Plug (SCPBH08SB)	1C-4
FRITS3126A	Reverse Bayonet Panel Mount Plug (SCPBH064PP)	1C-4
FRITS3126R	Reverse Bayonet Panel Mount Plug (SCPBH064PP)	1C-4
FRITS4100A*	Reverse Bayonet Wall Mount Receptacle (SCPBH00A*(F80)	1C-4
FRITS4100F*	Reverse Bayonet Wall Mount Receptacle (SCPBH00LF*(F80)	1C-4
FRITS4100R*	Reverse Bayonet Wall Mount Receptacle (SCPBH00R*(F80)	1C-4
FRITS4100RS*	Reverse Bayonet Wall Mount Receptacle (SCPBH00RV*(F80)	1C-4
FRITS4100SP*	Reverse Bayonet Wall Mount Receptacle (SCPBH00SB*(F80)	1C-4
FRITS4101A*	Reverse Bayonet In-Line Receptacle (SCPBH01A*(F80)	1C-4
FRITS4101F*	Reverse Bayonet In-Line Receptacle (SCPBH01LF*(F80)	1C-4
FRITS4101G*	Reverse Bayonet In-Line Receptacle (SCPBH01G*(F80)	1C-4
FRITS4101GR*	Reverse Bayonet In-Line Receptacle (SCPBH01G2G*(F80)	1C-4
FRITS4101R*	Reverse Bayonet In-Line Receptacle (SCPBH01R*(F80)	1C-4

★ Indicates additional alpha-numerics are required to complete part number

CROSS REFERENCE/INDEX

FRITS4101RS*	Reverse Bayonet In-Line Receptacle (SCPBH01RV*(F80)	1C-4
FRITS4101SP*	Reverse Bayonet In-Line Receptacle (SCPBH01SB*(F80)	1C-4
FRITS4102A*	Reverse Bayonet Box Mount Receptacle (SCPBH02A*(F80)	1C-4
FRITS4102E*	Reverse Bayonet Box Mount Receptacle (SCPBH02E*(F80)	1C-4
FRITS4102R*	Reverse Bayonet Box Mount Receptacle (SCPBH02R*(F80)	1C-4
FRITS4102Y*	Reverse Bayonet Box Mount Receptacle (SCPBH02YM*(F80)	1C-4
FRITS4103A*	Reverse Bayonet Box Mount Receptacle (SCPBH03A*(F80)	1C-4
FRITS4103R*	Reverse Bayonet Box Mount Receptacle (SCPBH03R*(F80)	1C-4
FRITS4103Y*	Reverse Bayonet Box Mount Receptacle (SCPBH03YM*(F80)	1C-4
FRITS41030A*	Reverse Bayonet Wall Mount Receptacle (SCPBH030A*(F80)	1C-4
FRITS41030F*	Reverse Bayonet Wall Mount Receptacle (SCPBH030LF*(F80)	1C-4
FRITS41030G*	Reverse Bayonet Wall Mount Receptacle (SCPBH030G*(F80)	1C-4
FRITS41030GR*	Reverse Bayonet Wall Mount Receptacle (SCPBH030G2G*(F80)	1C-4
FRITS41030R*	Reverse Bayonet Wall Mount Receptacle (SCPBH030R*(F80)	1C-4
FRITS41030RS*	Reverse Bayonet Wall Mount Receptacle (SCPBH030RV*(F80)	1C-4
FRITS41030SP*	Reverse Bayonet Wall Mount Receptacle (SCPBH030SB*(F80)	1C-4
FRITS41038A*	Reverse Bayonet Wall Mount Receptacle (SCPBH038A*(F80)	1C-4
FRITS41038R*	Reverse Bayonet Wall Mount Receptacle (SCPBH038R*(F80)	1C-4
FRITS4106A*	Reverse Bayonet Straight Plug (SCPBH06A*(F80)	1C-4
FRITS4106F*	Reverse Bayonet Straight Plug (SCPBH06LF*(F80)	1C-4
FRITS4106G*	Reverse Bayonet Straight Plug (SCPBH06G*(F80)	1C-4
FRITS4106GR*	Reverse Bayonet Straight Plug (SCPBH06G2G*(F80)	1C-4
FRITS4106R*	Reverse Bayonet Straight Plug (SCPBH06R*(F80)	1C-4
FRITS4106RS*	Reverse Bayonet Straight Plug (SCPBH06RV*(F80)	1C-4
FRITS4106SP*	Reverse Bayonet Straight Plug (SCPBH06SB*(F80)	1C-4
FRITS4107A*	Reverse Bayonet Jam Nut Receptacle (SCPBH07R*(F80)	1C-4
FRITS41078A*	Reverse Bayonet Jam Nut Receptacle (SCPBH078RR*(F80)	1C-4
FRITS41078R*	Reverse Bayonet Jam Nut Receptacle (SCPBH078RR*(F80)	1C-4
FRITS4108A*	Reverse Bayonet 90 Degree Plug (SCPBH08A*(F80)	1C-4
FRITS4108F*	Reverse Bayonet 90 Degree Plug (SCPBH08F*(F80)	1C-4
FRITS4108GR*	Reverse Bayonet 90 Degree Plug (SCPBH08G2G*(F80)	1C-4
FRITS4108R*	Reverse Bayonet 90 Degree Plug (SCPBH08R*(F80)	1C-4
FRITS4108SP*	Reverse Bayonet 90 Degree Plug (SCPBH08SB*(F80)	1C-4
FRITS4126A*	Reverse Bayonet Wall Mount Plug (SCPBH064PP*(F80)	1C-4
FRITS4126R*	Reverse Bayonet Wall Mount Plug (SCPBH064PP*(F80)	1C-4
FRITSG3106A*N0**	Reverse Bayonet Straight Plug (SCPBHG06-*)	1C-4
FRITSG4106A*N0**	Reverse Bayonet Straight Plug (SCPBHG06-*(F80)	1C-4
GTC00★	Reverse Bayonet Wall Mount Receptacle (SCPB00★F80)	1C-4
GTC01★	Reverse Bayonet In-Line Receptacle (SCPB01★F80)	1C-4
GTC02★	Reverse Bayonet Box Mount Receptacle (SCPB02★F80)	1C-4
GTC06★	Reverse Bayonet Straight Plug (SCPB06★F80)	1C-4
GTC07★	Reverse Bayonet Jam Nut Receptacle (SCPB07★F80)	1C-4
GTC08★	Reverse Bayonet 90 Degree Plug (SCPB08★F80)	1C-4
GTC020★	Reverse Bayonet Wall Mount Receptacle (SCPB020★F80)	1C-4
GTC030★	Reverse Bayonet Wall Mount Receptacle (SCPB030★F80)	1C-4
GTC070★	Reverse Bayonet Jam Nut Receptacle (SCPB070★F80)	1C-4
GTS00★	Reverse Bayonet Wall Mount Receptacle (SCPB00★)	1C-4
GTS01★	Reverse Bayonet In-Line Receptacle (SCPB01★)	1C-4
GTS02★	Reverse Bayonet Box Mount Receptacle (SCPB02★)	1C-4
GTS06★	Reverse Bayonet Straight Plug (SCPB06★)	1C-4
GTS07★	Reverse Bayonet Jam Nut Receptacle (SCPB07★)	1C-4
GTS08★	Reverse Bayonet 90 Degree Plug (SCPB08★)	1C-4
GTS020★	Reverse Bayonet Wall Mount Receptacle (SCPB020★)	1C-4
GTS030★	Reverse Bayonet Wall Mount Receptacle (SCPB030★)	1C-4
GTS070★	Reverse Bayonet Jam Nut Receptacle (SCPB070★)	1C-4
IT3057*A	Cable Clamp (MS3057*A)	(Catalog 401)
IT3057*C	Cable Clamp (MS3057*C)	(Catalog 401)
IT3100A	Threaded Wall Mount Receptacle (SCP00A)	(Catalog 102)
IT3100F	Threaded Wall Mount Receptacle (SCP00D)	(Catalog 102)
IT3100R	Threaded Wall Mount Receptacle (SCP00R)	(Catalog 102)
IT3101A	Threaded In-Line Receptacle (SCP01A)	(Catalog 102)
IT3101F	Threaded In-Line Receptacle (SCP01D)	(Catalog 102)
IT3101R	Threaded In-Line Receptacle (SCP01R)	(Catalog 102)
IT3102A	Reverse Bayonet Threaded Box Mount Receptacle (SCP02Z)	(Catalog 102)
IT3102E	Reverse Bayonet Threaded Box Mount Receptacle (SCP02Y)	(Catalog 102)
IT3102R	Reverse Bayonet Threaded Box Mount Receptacle (SCP02Y)	(Catalog 102)
IT3102Y	Reverse Bayonet Threaded Box Mount Receptacle (SCP09)	(Catalog 102)

★ Indicates additional alpha-numerics are required to complete part number

SPACECRAFT COMPONENTS CORP.
3040 Clayton Street
North Las Vegas, NV 89032
Phone: 702.851.7600
Fax: 702.851.7620
Email: salesinfo@spacecraft.com
Web: www.spacecraft.com

IT3106A	Reverse Bayonet Threaded Straight Plug (SCP06A)	(Catalog 102)
IT3106F	Reverse Bayonet Threaded Straight Plug (SCP06D)	(Catalog 102)
IT3106G	Reverse Bayonet Threaded Straight Plug (SCP06N)	(Catalog 102)
IT3106GR	Reverse Bayonet Threaded Straight Plug (SCP06G2G)	(Catalog 102)
IT3106R	Reverse Bayonet Threaded Straight Plug (SCP06R)	(Catalog 102)
IT3106SP	Reverse Bayonet Threaded Straight Plug (SCP06NR)	(Catalog 102)
IT3108A	Reverse Bayonet Threaded 90 Degree Plug (SCP08A)	(Catalog 102)
IT3108F	Reverse Bayonet Threaded 90 Degree Plug (SCP08F)	(Catalog 102)
IT3108R	Reverse Bayonet Threaded 90 Degree Plug (SCP08R)	(Catalog 102)
IT3420-*	Rubber Bushing (MS3420-*)	(Catalog 401)
IT3420-*A	Rubber Bushing (MS3420-*A)	(Catalog 401)
IT4100A	Threaded Wall Mount Receptacle (SCP00A*-F80)	(Catalog 102)
IT4100F	Threaded Wall Mount Receptacle (SCP00D*-F80)	(Catalog 102)
IT4100R	Threaded Wall Mount Receptacle (SCP00R*-F80)	(Catalog 102)
IT4101A	Threaded In-Line Receptacle (SCP01A*-F80)	(Catalog 102)
IT4101F	Threaded In-Line Receptacle (SCP01D*-F80)	(Catalog 102)
IT4101R	Threaded In-Line Receptacle (SCP01R*-F80)	(Catalog 102)
IT4102A	Threaded Box Mount Receptacle (SCP02Z*-F80)	(Catalog 102)
IT4102E	Threaded Box Mount Receptacle (SCP02Y*-F80)	(Catalog 102)
IT4102R	Threaded Box Mount Receptacle (SCP02Y*-F80)	(Catalog 102)
IT4102Y	Threaded Box Mount Receptacle (SCP09*-F80)	(Catalog 102)
IT4106A	Threaded Straight Plug (SCP06A*-F80)	(Catalog 102)
IT4106F	Threaded Straight Plug (SCP06D*-F80)	(Catalog 102)
IT4106G	Threaded Straight Plug (SCP06N*-F80)	(Catalog 102)
IT4106GR	Threaded Straight Plug (SCP06G2G*-F80)	(Catalog 102)
IT4106R	Threaded Straight Plug (SCP06R*-F80)	(Catalog 102)
IT4106SP	Threaded Straight Plug (SCP06NR*-F80)	(Catalog 102)
IT4108A	Threaded 90 Degree Plug (SCP08A*-F80)	(Catalog 102)
IT4108F	Threaded 90 Degree Plug (SCP08F*-F80)	(Catalog 102)
IT4108R	Threaded 90 Degree Plug (SCP08R*-F80)	(Catalog 102)
IT25042	Threaded Dust Cap for Plug (SCP25042)	(Catalog 401)
IT25043	Threaded Dust Cap for Receptacle (SCP25043)	(Catalog 401)
IT40450-*	Flange Gasket (SCP40450-*)	(Catalog 401)
IT40450-*S	Flange Gasket (SCP40450-*S)	(Catalog 401)
IT40460-*	Flange Gasket (SCP40460-*)	(Catalog 401)
IT40460-*S	Flange Gasket (SCP40460-*S)	(Catalog 401)
ITB02T	Reverse Bayonet Receptacle Dust Cap (SCPB*TF)	6C-9
ITB06T	Reverse Bayonet Plug Dust Cap (SCPB*TV)	6C-8
ITS02PP	Reverse Bayonet Thru-Bulkhead Receptacle (SCPBTB-*)	1C-4
ITS05	Reverse Bayonet Dummy Receptacle (SCPB05)	6C-7
ITS3100A*	Reverse Bayonet Wall Mount Receptacle (SCPB00A*)	1C-4
ITS3100F*	Reverse Bayonet Wall Mount Receptacle (SCPB00LF*)	1C-4
ITS3100G*	Reverse Bayonet Wall Mount Receptacle (SCPB00G*)	1C-4
ITS3100GR*	Reverse Bayonet Wall Mount Receptacle (SCPB00G2G*)	1C-4
ITS3100R*	Reverse Bayonet Wall Mount Receptacle (SCPB00R*)	1C-4
ITS3100RS*	Reverse Bayonet Wall Mount Receptacle (SCPB00RV*)	1C-4
ITS3100SP*	Reverse Bayonet Wall Mount Receptacle (SCPB00SB*)	1C-4
ITS3101A*	Reverse Bayonet In-Line Receptacle (SCPB01A*)	1C-4
ITS3101F*	Reverse Bayonet In-Line Receptacle (SCPB01LF*)	1C-4
ITS3101G*	Reverse Bayonet In-Line Receptacle (SCPB01G*)	1C-4
ITS3101GR*	Reverse Bayonet In-Line Receptacle (SCPB01G2G*)	1C-4
ITS3101R * N5**	Reverse Bayonet In-Line Receptacle (SCPB01CFZ*)	1C-4
ITS3101R*	Reverse Bayonet In-Line Receptacle (SCPB01R*)	1C-4
ITS3101RS*	Reverse Bayonet In-Line Receptacle (SCPB01RV*)	1C-4
ITS3101SP*	Reverse Bayonet In-Line Receptacle (SCPB01SB*)	1C-4
ITS3102A*	Reverse Bayonet Box Mount Receptacle (SCPB02A*)	1C-4
ITS3102E*	Reverse Bayonet Box Mount Receptacle (SCPB02E*)	1C-4
ITS3102R*	Reverse Bayonet Box Mount Receptacle (SCPB02R*)	1C-4
ITS3102Y*	Reverse Bayonet Box Mount Receptacle (SCPB02YM*)	1C-4
ITS3103A*	Reverse Bayonet Box Mount Receptacle (SCPB03A*)	1C-4
ITS3103R*	Reverse Bayonet Box Mount Receptacle (SCPB03R*)	1C-4
ITS3103Y*	Reverse Bayonet Box Mount Receptacle (SCPB03YM*)	1C-4
ITS31030A*	Reverse Bayonet Wall Mount Receptacle (SCPB030A*)	1C-4
ITS31030F*	Reverse Bayonet Wall Mount Receptacle (SCPB030LF*)	1C-4
ITS31030G*	Reverse Bayonet Wall Mount Receptacle (SCPB030G*)	1C-4
ITS31030GR*	Reverse Bayonet Wall Mount Receptacle (SCPB030G2G*)	1C-4
ITS31030R*	Reverse Bayonet Wall Mount Receptacle (SCPB030R*)	1C-4

★ Indicates additional alpha-numerics are required to complete part number

CROSS REFERENCE/INDEX

ITS31030RS* Reverse Bayonet Wall Mount Receptacle (SCPB030RV*) 1C-4
ITS31030SP* Reverse Bayonet Wall Mount Receptacle (SCPB030SB*) 1C-4
ITS31038A* Reverse Bayonet Wall Mount Receptacle (SCPB038A*) 1C-4
ITS31038R* Reverse Bayonet Wall Mount Receptacle (SCPB038R*) 1C-4
ITS3106A* Reverse Bayonet Straight Plug (SCPB06A-*) 1C-4
ITS3106F* Reverse Bayonet Straight Plug (SCPB06LF*) 1C-4
ITS3106G* Reverse Bayonet Straight Plug (SCPB06G*) 1C-4
ITS3106GR* Reverse Bayonet Straight Plug (SCPB06G2G*) 1C-4
ITS3106R* Reverse Bayonet Straight Plug (SCPB06R*) 1C-4
ITS3106RS* Reverse Bayonet Straight Plug (SCPB06RV*) 1C-4
ITS3106SP* Reverse Bayonet Straight Plug (SCPB06SB*) 1C-4
ITS3107A* Reverse Bayonet Jam Nut Receptacle (SCPB07R*) 1C-4
ITS31078A* Reverse Bayonet Jam Nut Receptacle (SCPB078RR*) 1C-4
ITS31078R* Reverse Bayonet Jam Nut Receptacle (SCPB078RR*) 1C-4
ITS3108A* Reverse Bayonet 90 Degree Plug (SCPB08A*) 1C-4
ITS3108F* Reverse Bayonet 90 Degree Plug (SCPB08F*) 1C-4
ITS3108GR* Reverse Bayonet 90 Degree Plug (SCPB08G2G*) 1C-4
ITS3108R* Reverse Bayonet 90 Degree Plug (SCPB08R*) 1C-4
ITS3108R*N1** Reverse Bayonet 90 Degree Plug (SCPB08F*) 1C-4
ITS3108R*N5** Reverse Bayonet 90 Degree Plug (SCPB08CFZ*) 1C-4
ITS3108RGG* Reverse Bayonet 90 Degree Plug (SCPB08GG*) 1C-4
ITS3108SP* Reverse Bayonet 90 Degree Plug (SCPB08SB*) 1C-4
ITS3126A* Reverse Bayonet Wall Mount Plug (SCPB064PP*) 1C-4
ITS3126R* Reverse Bayonet Wall Mount Plug (SCPB064PP*) 1C-4
ITS4100A* Reverse Bayonet Wall Mount Receptacle (SCPB00A*(F80) 1C-4
ITS4100F* Reverse Bayonet Wall Mount Receptacle (SCPB00LF*(F80) 1C-4
ITS4100G* Reverse Bayonet Wall Mount Receptacle (SCPB00G*(F80) 1C-4
ITS4100GR* Reverse Bayonet Wall Mount Receptacle (SCPB00G2G*(F80) 1C-4
ITS4100R* Reverse Bayonet Wall Mount Receptacle (SCPB00R*(F80) 1C-4
ITS4100RS* Reverse Bayonet Wall Mount Receptacle (SCPB00RV*(F80) 1C-4
ITS4100SP* Reverse Bayonet Wall Mount Receptacle (SCPB00SB*(F80) 1C-4
ITS4101A* Reverse Bayonet In-Line Receptacle (SCPB01A*(F80) 1C-4
ITS4101F* Reverse Bayonet In-Line Receptacle (SCPB01LF*(F80) 1C-4
ITS4101G* Reverse Bayonet In-Line Receptacle (SCPB01G*(F80) 1C-4
ITS4101GR* Reverse Bayonet In-Line Receptacle (SCPB01G2G*(F80) 1C-4
ITS4101R* Reverse Bayonet In-Line Receptacle (SCPB01R*(F80) 1C-4
ITS4101RS* Reverse Bayonet In-Line Receptacle (SCPB01RV*(F80) 1C-4
ITS4101SP* Reverse Bayonet In-Line Receptacle (SCPB01SB*(F80) 1C-4
ITS4102A* Reverse Bayonet Box Mount Receptacle (SCPB02A*(F80) 1C-4
ITS4102E* Reverse Bayonet Box Mount Receptacle (SCPB02E*(F80) 1C-4
ITS4102R* Reverse Bayonet Box Mount Receptacle (SCPB02R*(F80) 1C-4
ITS4102Y* Reverse Bayonet Box Mount Receptacle (SCPB02YM*(F80) 1C-4
ITS4103A* Reverse Bayonet Box Mount Receptacle (SCPB03A*(F80) 1C-4
ITS4103R* Reverse Bayonet Box Mount Receptacle (SCPB03R*(F80) 1C-4
ITS4103Y* Reverse Bayonet Box Mount Receptacle (SCPB03YM*(F80) 1C-4
ITS41030A* Reverse Bayonet Wall Mount Receptacle (SCPB030A*(F80) 1C-4
ITS41030F* Reverse Bayonet Wall Mount Receptacle (SCPB030LF*(F80) 1C-4
ITS41030G* Reverse Bayonet Wall Mount Receptacle (SCPB030G*(F80) 1C-4
ITS41030GR* Reverse Bayonet Wall Mount Receptacle (SCPB030G2G*(F80) 1C-4
ITS41030R* Reverse Bayonet Wall Mount Receptacle (SCPB030R*(F80) 1C-4
ITS41030RS* Reverse Bayonet Wall Mount Receptacle (SCPB030RV*(F80) 1C-4
ITS41030SP* Reverse Bayonet Wall Mount Receptacle (SCPB030SB*(F80) 1C-4
ITS41038A* Reverse Bayonet Wall Mount Receptacle (SCPB038A*(F80) 1C-4
ITS41038R* Reverse Bayonet Wall Mount Receptacle (SCPB038R*(F80) 1C-4
ITS4106A* Reverse Bayonet Straight Plug (SCPB06A*(F80) 1C-4
ITS4106F* Reverse Bayonet Straight Plug (SCPB06LF*(F80) 1C-4
ITS4106G* Reverse Bayonet Straight Plug (SCPB06G*(F80) 1C-4
ITS4106GR* Reverse Bayonet Straight Plug (SCPB06G2G*(F80) 1C-4
ITS4106R* Reverse Bayonet Straight Plug (SCPB06R*(F80) 1C-4
ITS4106RS* Reverse Bayonet Straight Plug (SCPB06RV*(F80) 1C-4
ITS4106SP* Reverse Bayonet Straight Plug (SCPB06SB*(F80) 1C-4
ITS4107A* Reverse Bayonet Jam Nut Receptacle (SCPB07R*(F80) 1C-4
ITS41078A* Reverse Bayonet Jam Nut Receptacle (SCPB078RR*(F80) 1C-4
ITS41078R* Reverse Bayonet Jam Nut Receptacle (SCPB078RR*(F80) 1C-4
ITS4108A* Reverse Bayonet 90 Degree Plug (SCPB08A*(F80) 1C-4
ITS4108AGG* Reverse Bayonet 90 Degree Plug (SCPB08GG*(F80) 1C-4
ITS4108F* Reverse Bayonet 90 Degree Plug (SCPB08F*(F80) 1C-4

★ Indicates additional alpha-numerics are required to complete part number

SPACECRAFT COMPONENTS CORP.
3040 Clayton Street
North Las Vegas, NV 89032
Phone: 702.851.7600
Fax: 702.851.7620
Email: salesinfo@spacecraft.com
Web: www.spacecraft.com

ITS4108GR*	Reverse Bayonet 90 Degree Plug (SCPB08G2G*(F80)	1C-4
ITS4108R*	Reverse Bayonet 90 Degree Plug (SCPB08R*(F80)	1C-4
ITS4108SP*	Reverse Bayonet 90 Degree Plug (SCPB08SB*(F80)	1C-4
ITS4126A*	Reverse Bayonet Wall Mount Plug (SCPB064PP*(F80)	1C-4
ITS4126R*	Reverse Bayonet Wall Mount Plug (SCPB064PP*(F80)	1C-4
ITZ02T*H	Threaded Dust Cap for Receptacle ((SCPZ*TF)	Not Illustrated
ITZ06T*H	Threaded Dust Cap for Receptacle (SCPZ*TV)	Not Illustrated
ITZ3100A*CRG**H	Threaded Wall Mount Receptacle (SCPZ00A*)	Not Illustrated
ITZ3100A*D2**H	Threaded Wall Mount Receptacle (SCPZ00A*)	Not Illustrated
ITZ3100A*PHM**H	Threaded Wall Mount Receptacle (SCPZ00A*)	Not Illustrated
ITZ3100A*PM**H	Threaded Wall Mount Receptacle (SCPZ00A*)	Not Illustrated
ITZ3100R*CRG**H	Threaded Wall Mount Receptacle (SCPZ00R*)	Not Illustrated
ITZ3100R*D2**H	Threaded Wall Mount Receptacle (SCPZ00R*)	Not Illustrated
ITZ3102R*H**	Threaded Box Mount Receptacle (SCPZ02R*)	Not Illustrated
ITZ3103R*H**	Threaded Box Mount Receptacle (SCPZ03R*)	Not Illustrated
ITZ31030A* D2**H	Threaded Wall Mount Receptacle (SCPZ030A*)	Not Illustrated
ITZ31030A* PH**H	Threaded Wall Mount Receptacle (SCPZ030A*)	Not Illustrated
ITZ31030A* PM**H	Threaded Wall Mount Receptacle (SCPZ030A*)	Not Illustrated
ITZ31030A*CRG**H	Threaded Wall Mount Receptacle (SCPZ030A*)	Not Illustrated
ITZ31030R* D2**H	Threaded Wall Mount Receptacle (SCPZ030R*)	Not Illustrated
ITZ31030R*CRG**H	Threaded Wall Mount Receptacle (SCPZ030R*)	Not Illustrated
ITZ3106A*CRG**H	Threaded Straight Plug (SCPZ06* (SCPZ06A*)	Not Illustrated
ITZ3106A*D2**H	Threaded Straight Plug (SCPZ06* (SCPZ06A*)	Not Illustrated
ITZ3106A*PM**H	Threaded Straight Plug (SCPZ06* (SCPZ06A*)	Not Illustrated
ITZ3106R*CRG**H	Threaded Straight Plug (SCPZ06* (SCPZ06R*)	Not Illustrated
ITZ3106R*D2**H	Threaded Straight Plug (SCPZ06* (SCPZ06R*)	Not Illustrated
ITZ3108A* CRG**H	Threaded 90 Degree Plug (SCPZ08* (SCPZ08A*)	Not Illustrated
ITZ3108A* D2**H	Threaded 90 Degree Plug (SCPZ08* (SCPZ08A*)	Not Illustrated
ITZ3108A* PM**H	Threaded 90 Degree Plug (SCPZ08* (SCPZ08A*)	Not Illustrated
ITZ3108A*PMH**H	Threaded 90 Degree Plug (SCPZ08* (SCPZ08A*)	Not Illustrated
ITZ3108R* D2**H	Threaded 90 Degree Plug (SCPZ08* (SCPZ08R*)	Not Illustrated
ITZ3108R* CRG**H	Threaded 90 Degree Plug (SCPZ08* (SCPZ08R*)	Not Illustrated
ITZ4100A*CRG**H	Threaded Wall Mount Receptacle (SCPZ00A*(F80)	Not Illustrated
ITZ4100A*CRG**H-B0	Threaded Wall Mount Receptacle (SCPZ00A*(F0)	Not Illustrated
ITZ4100A*CRG**H-B1	Threaded Wall Mount Receptacle (SCPZ00A*(F80-A95)	Not Illustrated
ITZ4100A*D2**H	Threaded Wall Mount Receptacle (SCPZ00A*(F80)	Not Illustrated
ITZ4100A*D2**H-B0	Threaded Wall Mount Receptacle (SCPZ00A*(F0)	Not Illustrated
ITZ4100A*D2**H-B1	Threaded Wall Mount Receptacle (SCPZ00A*(F80-A95)	Not Illustrated
ITZ4100A*PHM**H	Threaded Wall Mount Receptacle (SCPZ00A*(F80)	Not Illustrated
ITZ4100A*PHM**H-B0	Threaded Wall Mount Receptacle (SCPZ00A*(F0)	Not Illustrated
ITZ4100A*PHM**H-B1	Threaded Wall Mount Receptacle (SCPZ00A*(F80-A95)	Not Illustrated
ITZ4100A*PM**H	Threaded Wall Mount Receptacle (SCPZ00A*(F80)	Not Illustrated
ITZ4100A*PM**H-B0	Threaded Wall Mount Receptacle (SCPZ00A*(F0)	Not Illustrated
ITZ4100A*PM**H-B1	Threaded Wall Mount Receptacle (SCPZ00A*(F80-A95)	Not Illustrated
ITZ4100R*CRG**H	Threaded Wall Mount Receptacle (SCPZ00R*(F80)	Not Illustrated
ITZ4100R*CRG**H-B0	Threaded Wall Mount Receptacle (SCPZ00R*(F0)	Not Illustrated
ITZ4100R*CRG**H-B1	Threaded Wall Mount Receptacle (SCPZ00R*(F80-A95)	Not Illustrated
ITZ4100R*D2**H	Threaded Wall Mount Receptacle (SCPZ00R*(F80)	Not Illustrated
ITZ4100R*D2**H-B0	Threaded Wall Mount Receptacle (SCPZ00R*(F0)	Not Illustrated
ITZ4100R*D2**H-B1	Threaded Wall Mount Receptacle (SCPZ00R*(F80-A95)	Not Illustrated
ITZ4102R*H**	Threaded Box Mount Receptacle (SCPZ02R*(F80)	Not Illustrated
ITZ4102R*H**-B0	Threaded Box Mount Receptacle (SCPZ02R*(F0)	Not Illustrated
ITZ4102R*H**-B1	Threaded Box Mount Receptacle (SCPZ02R*(F80-A95)	Not Illustrated
ITZ4103R*H**	Threaded Box Mount Receptacle (SCPZ03R*(F80)	Not Illustrated
ITZ4103R*H**-B0	Threaded Box Mount Receptacle (SCPZ03R*(F0)	Not Illustrated
ITZ4103R*H**-B1	Threaded Box Mount Receptacle (SCPZ03R*(F80-A95)	Not Illustrated
ITZ41030A* D2**H	Threaded Wall Mount Receptacle (SCPZ030A*(F80)	Not Illustrated
ITZ41030A* D2**H-B0	Threaded Wall Mount Receptacle (SCPZ030A*(F0)	Not Illustrated
ITZ41030A* D2**H-B1	Threaded Wall Mount Receptacle (SCPZ030A*(F80-A95)	Not Illustrated
ITZ41030A* PH**H	Threaded Wall Mount Receptacle (SCPZ030A*(F80)	Not Illustrated
ITZ41030A* PH**H-B0	Threaded Wall Mount Receptacle (SCPZ030A*(F0)	Not Illustrated
ITZ41030A* PH**H-B1	Threaded Wall Mount Receptacle (SCPZ030A*(F80-A95)	Not Illustrated
ITZ41030A* PM**H	Threaded Wall Mount Receptacle (SCPZ030A*(F80)	Not Illustrated
ITZ41030A* PM**H-B0	Threaded Wall Mount Receptacle (SCPZ030A*(F0)	Not Illustrated
ITZ41030A* PM**H-B1	Threaded Wall Mount Receptacle (SCPZ030A*(F80-A95)	Not Illustrated
ITZ41030A*CRG**H	Threaded Wall Mount Receptacle (SCPZ030A*(F80)	Not Illustrated
ITZ41030A*CRG**H-B0	Threaded Wall Mount Receptacle (SCPZ030A*(F0)	Not Illustrated

★ Indicates additional alpha-numerics are required to complete part number

3040 Clayton Street
North Las Vegas, NV 89032
Phone: 702.851.7600
Fax: 702.851.7620
Email: salesinfo@spacecraft.com
Web: www.spacecraft.com
SPACECRAFT COMPONENTS CORP.

CROSS REFERENCE/INDEX

ITZ41030A*CRG**H-B1	Threaded Wall Mount Receptacle (SCPZ030A*(F80-A95)	Not Illustrated
ITZ41030R* D2**H	Threaded Wall Mount Receptacle (SCPZ030R*(F80)	Not Illustrated
ITZ41030R* D2**H-B0	Threaded Wall Mount Receptacle (SCPZ030R*(F0)	Not Illustrated
ITZ41030R* D2**H-B1	Threaded Wall Mount Receptacle (SCPZ030R*(F80-A95)	Not Illustrated
ITZ41030R*CRG**H	Threaded Wall Mount Receptacle (SCPZ030R*(F80)	Not Illustrated
ITZ41030R*CRG**H-B0	Threaded Wall Mount Receptacle (SCPZ030R*(F0)	Not Illustrated
ITZ41030R*CRG**H-B1	Threaded Wall Mount Receptacle (SCPZ030R*(F80-A95)	Not Illustrated
ITZ4106A*CRG**H	Threaded Straight Plug (SCPZ06A*(F80)	Not Illustrated
ITZ4106A*CRG**H-B0	Threaded Straight Plug (SCPZ06A*(F0)	Not Illustrated
ITZ4106A*CRG**H-B1	Threaded Straight Plug (SCPZ06A*(F80-A95)	Not Illustrated
ITZ4106A*D2**H	Threaded Straight Plug (SCPZ06A*(F80)	Not Illustrated
ITZ4106A*D2**H-B0	Threaded Straight Plug (SCPZ06A*(F0)	Not Illustrated
ITZ4106A*D2**H-B1	Threaded Straight Plug (SCPZ06A*(F80-A95)	Not Illustrated
ITZ4106A*PM**H	Threaded Straight Plug (SCPZ06A*(F80)	Not Illustrated
ITZ4106A*PM**H-B0	Threaded Straight Plug (SCPZ06A*(F0)	Not Illustrated
ITZ4106A*PM**H-B1	Threaded Straight Plug (SCPZ06A*(F80-A95)	Not Illustrated
ITZ4106R*CRG**H	Threaded Straight Plug (SCPZ06R*(F80)	Not Illustrated
ITZ4106R*CRG**H-B0	Threaded Straight Plug (SCPZ06R*(F0)	Not Illustrated
ITZ4106R*CRG**H-B1	Threaded Straight Plug (SCPZ06R*(F80-A95)	Not Illustrated
ITZ4106R*D2**H	Threaded Straight Plug (SCPZ06R*(F80)	Not Illustrated
ITZ4106R*D2**H-B0	Threaded Straight Plug (SCPZ06R*(F0)	Not Illustrated
ITZ4106R*D2**H-B1	Threaded Straight Plug (SCPZ06R*(F80-A95)	Not Illustrated
ITZ4108A* CRG**H	Threaded 90 Degree Plug (SCPZ08A*(F80)	Not Illustrated
ITZ4108A* CRG**H-B0	Threaded 90 Degree Plug (SCPZ08A*(F0)	Not Illustrated
ITZ4108A* CRG**H-B1	Threaded 90 Degree Plug (SCPZ08A*(F80-A95)	Not Illustrated
ITZ4108A* D2**H	Threaded 90 Degree Plug (SCPZ08A*(F80)	Not Illustrated
ITZ4108A* D2**H-B0	Threaded 90 Degree Plug (SCPZ08A*(F0)	Not Illustrated
ITZ4108A* D2**H-B1	Threaded 90 Degree Plug (SCPZ08A*(F80-A95)	Not Illustrated
ITZ4108A* PM**H	Threaded 90 Degree Plug (SCPZ08A*(F80)	Not Illustrated
ITZ4108A* PM**H-B0	Threaded 90 Degree Plug (SCPZ08A*(F0)	Not Illustrated
ITZ4108A* PM**H-B1	Threaded 90 Degree Plug (SCPZ08A*(F80-A95)	Not Illustrated
ITZ4108A*PMH**H	Threaded 90 Degree Plug (SCPZ08A*(F80)	Not Illustrated
ITZ4108A*PMH**H-B0	Threaded 90 Degree Plug (SCPZ08A*(F0)	Not Illustrated
ITZ4108A*PMH**H-B1	Threaded 90 Degree Plug (SCPZ08A*(F80-A95)	Not Illustrated
ITZ4108R* D2**H	Threaded 90 Degree Plug (SCPZ08R*(F80)	Not Illustrated
ITZ4108R* D2**H-B0	Threaded 90 Degree Plug (SCPZ08R*(F0)	Not Illustrated
ITZ4108R* D2**H-B1	Threaded 90 Degree Plug (SCPZ08R*(F80-A95)	Not Illustrated
ITZ4108R* CRG**H	Threaded 90 Degree Plug (SCPZ08R*(F80)	Not Illustrated
ITZ4108R* CRG**H-B0	Threaded 90 Degree Plug (SCPZ08R*(F0)	Not Illustrated
ITZ4108R* CRG**H-B1	Threaded 90 Degree Plug (SCPZ08R*(F80-A95)	Not Illustrated
LTC00★	Reverse Bayonet Wall Mount Receptacle (SCPB00★F80)	1C-4
LTC01★	Reverse Bayonet In-Line Receptacle (SCPB01★F80)	1C-4
LTC02★	Reverse Bayonet Box Mount Receptacle (SCPB02★F80)	1C-4
LTC06★	Reverse Bayonet Straight Plug (SCPB06★F80)	1C-4
LTC07★	Reverse Bayonet Jam Nut Receptacle (SCPB07★F80)	1C-4
LTC08★	Reverse Bayonet 90 Degree Plug (SCPB08★F80)	1C-4
LTC020★	Reverse Bayonet Wall Mount Receptacle (SCPB020★F80)	1C-4
LTC030★	Reverse Bayonet Wall Mount Receptacle (SCPB030★F80)	1C-4
LTC070★	Reverse Bayonet Jam Nut Receptacle (SCPB070★F80)	1C-4
LTCTB★	Reverse Bayonet Thru-Bulkhead Receptacle (SCPBTB★)	1C-4
LTS00★	Reverse Bayonet Wall Mount Receptacle (SCPB00★)	1C-4
LTS01★	Reverse Bayonet In-Line Receptacle (SCPB01★)	1C-4
LTS02★	Reverse Bayonet Box Mount Receptacle (SCPB02★)	1C-4
LTS06★	Reverse Bayonet Straight Plug (SCPB06★)	1C-4
LTS07★	Reverse Bayonet Jam Nut Receptacle (SCPB07★)	1C-4
LTS08★	Reverse Bayonet 90 Degree Plug (SCPB08★)	1C-4
LTS020★	Reverse Bayonet Wall Mount Receptacle (SCPB020★)	1C-4
LTS030★	Reverse Bayonet Wall Mount Receptacle (SCPB030★)	1C-4
LTS070★	Reverse Bayonet Jam Nut Receptacle (SCPB070★)	1C-4
LTSTB★	Reverse Bayonet Thru-Bulkhead Receptacle (SCPBTB★)	1C-4
MD275★	Terminal Lug (SCPMD275★)	6C-15
MD775★	Terminal Lug (SCPMD775★)	6C-15
MD1600★	Terminal Lug (SCPMD1600★)	6C-15
MS3057*A	Cable Clamp	6C-3
MS3057*C	Cable Clamp	6C-5
MS3420-*	Rubber Bushing	6C-4
MS3420-*A	Rubber Bushing	6C-6

★ Indicates additional alpha-numerics are required to complete part number

SPACECRAFT COMPONENTS CORP.
3040 Clayton Street
North Las Vegas, NV 89032
Phone: 702.851.7600
Fax: 702.851.7620
Email: salesinfo@spacecraft.com
Web: www.spacecraft.com

MS25251-*	Sealing Plug	6C-14
MS27488-*	Sealing Plug	6C-14
PARVB	Conduit	1C-29 & 31
PARVG	Conduit	1C-31
PARFB	Conduit	1C-31
PCSG	Conduit	1C-31
PCST	Conduit	1C-31
PILAG	Conduit	1C-30
PILB	Conduit	1C-30
PILJ	Conduit	1C-30
PILMG	Conduit	1C-30
PIVG	Conduit	1C-30
R12-2500-★	Pin Contact, Size 18	3C-4
R12-3600-★	Pin Contact, Size 16	3C-4
R12-3608-★	Pin Contact, Size 16	3C-4
R12-3612-★	Pin Contact, Size 16	3C-4
R12-3613-★	Pin Contact, Size 16	3C-4
R12-3615-★	Pin Contact, Size 16	3C-4
R12-3620-★	Pin Contact, Size 16	3C-4
R12-3626-★	Pin Contact, Size 16	3C-4
R12-4900-★	Pin Contact, Size 16S	3C-4
R12-4912-★	Pin Contact, Size 16S	3C-4
R12-4913-★	Pin Contact, Size 16S	3C-4
R12-4915-★	Pin Contact, Size 16S	3C-4
R12-4926-★	Pin Contact, Size 16S	3C-4
R12-6400-★	Pin Contact, Size 12	3C-5
R12-6408-★	Pin Contact, Size 12	3C-5
R12-6412-★	Pin Contact, Size 12	3C-5
R12-6415-★	Pin Contact, Size 12	3C-5
R12-6420-★	Pin Contact, Size 12	3C-5
R12-6422-★	Pin Contact, Size 12	3C-5
R12-6430-★	Pin Contact, Size 12	3C-5
R12-6431-★	Pin Contact, Size 12	3C-5
R12-6438-★	Pin Contact, Size 12	3C-5
R12-7900-★	Pin Contact, Size 8	3C-5
R12-7915-★	Pin Contact, Size 8	3C-5
R12-7918-★	Pin Contact, Size 8	3C-5
R12-7926-★	Pin Contact, Size 8	3C-5
R12-7930-★	Pin Contact, Size 8	3C-5
R12-7950-★	Pin Contact, Size 8	3C-5
R12-7958-★	Pin Contact, Size 8	3C-5
R12-8500-★	Pin Contact, Size 4	3C-5
R12-8522-★	Pin Contact, Size 4	3C-5
R12-8525-★	Pin Contact, Size 4	3C-5
R12-8526-★	Pin Contact, Size 4	3C-5
R12-8530-★	Pin Contact, Size 4	3C-5
R12-8535-★	Pin Contact, Size 4	3C-5
R12-8550-★	Pin Contact, Size 4	3C-5
R12-8562-★	Pin Contact, Size 4	3C-5
R12-9200-★	Pin Contact, Size 1/0	3C-5
R12-9225-★	Pin Contact, Size 1/0	3C-5
R12-9235-★	Pin Contact, Size 1/0	3C-5
R12-9245-★	Pin Contact, Size 1/0	3C-5
R12-9246-★	Pin Contact, Size 1/0	3C-5
R12-9250-★	Pin Contact, Size 1/0	3C-5
R12-9275-★	Pin Contact, Size 1/0	3C-5
R12-9700-★	Pin Contact, Size 4/0	3C-5
R12-97115-★	Pin Contact, Size 4/0	3C-5
R12-97135-★	Pin Contact, Size 4/0	3C-5
R12-9790-★	Pin Contact, Size 4/0	3C-5
S0E19FP★	Panel Mount Receptacle	1C-32
S0E19FV★	In-Line Receptacle	1C-32
S0E19MP★	Panel Mount Plug	1C-32
S0E19MV★	Straight Plug	1C-32
S0X19FP★	Panel Mount Receptacle	1C-32
S0X19FV★	In-Line Receptacle	1C-32
S0X19MP★	Panel Mount Plug	1C-32

★ Indicates additional alpha-numerics are required to complete part number

CROSS REFERENCE/INDEX

S0X19MV★	Straight Plug	1C-32
S12-3800-★	Socket Contact, Size 16	3C-3
S12-5100-★	Socket Contact, Size 16S	3C-3
S12-6500-★	Socket Contact, Size 12	3C-3
S12-7900-★	Socket Contact, Size 8	3C-3
S12-8500-★	Socket Contact, Size 4	3C-3
S12-9200-★	Socket Contact, Size 1/0	3C-3
SCP40450-*	Gasket for Flange Mount Receptacle	6C-13
SCP40460-*	Gasket for Flange Mount Receptacle	6C-13
SCPB*TF	Dust Cap for Receptacle	6C-9
SCPB*TV	Dust Cup for Plug	6C-8
SCPB05*	Dummy Receptacle	6C-7
SCPB90-*	Right Angle Mounting Bracket	6C-12
SCPBE-02C	Coiled .250 Termination Band	6C-16
SCPBE-02F	Flat .250 Termination Band	6C-16
SCPBE-04C	Coiled .125 Termination Band	6C-16
SCPBE-04F	Flat .125 Termination Band	6C-16
SCPB(H)(S)00-(Dash Only)★	Wall Mount Receptacle	1C-5
SCPB(H)(S)00A★	Wall Mount Receptacle	1C-5
SCPB(H)(S)00AE★	Wall Mount Receptacle	1C-6
SCPB(H)(S)00AF★	Wall Mount Receptacle	1C-6
SCPB(H)(S)00AG★	Wall Mount Receptacle	1C-7
SCPB(H)(S)00AG2G★	Wall Mount Receptacle	1C-7
SCPB(H)(S)00APT★	Wall Mount Receptacle	1C-8
SCPB(H)(S)00ARK★	Wall Mount Receptacle	1C-8
SCPB(H)(S)00ARV★	Wall Mount Receptacle	1C-9
SCPB(H)(S)00ASB★	Wall Mount Receptacle	1C-9
SCPB(H)(S)00ASBF★	Wall Mount Receptacle	1C-10
SCPB(H)(S)00ASBT★	Wall Mount Receptacle	1C-10
SCPB(H)(S)00CF(Z)★	Wall Mount Receptacle	1C-11
SCPB(H)(S)00CMEG★	Wall Mount Receptacle	1C-11
SCPB(H)(S)00E★	Wall Mount Receptacle	1C-6
SCPB(H)(S)00F★	Wall Mount Receptacle	1C-6
SCPB(H)(S)00G★	Wall Mount Receptacle	1C-7
SCPB(H)(S)00G2G★	Wall Mount Receptacle	1C-7
SCPB(H)(S)00LA★	Wall Mount Receptacle	1C-12
SCPB(H)(S)00LAF★	Wall Mount Receptacle	1C-12
SCPB(H)(S)00LC(G)★	Wall Mount Receptacle	1C-13
SCPB(H)(S)00LCF(Z)★	Wall Mount Receptacle	1C-13
SCPB(H)(S)00LF★	Wall Mount Receptacle	1C-12
SCPB(H)(S)00LR★	Wall Mount Receptacle	1C-12
SCPB(H)(S)00NM(G)★	Wall Mount Receptacle	1C-14
SCPB(H)(S)00R ★	Wall Mount Receptacle	1C-5
SCPB(H)(S)00RK★	Wall Mount Receptacle	1C-8
SCPB(H)(S)00RV★	Wall Mount Receptacle	1C-9
SCPB(H)(S)00SB★	Wall Mount Receptacle	1C-9
SCPB(H)(S)00SBF★	Wall Mount Receptacle	1C-10
SCPB(H)(S)00SBT★	Wall Mount Receptacle	1C-10
SCPB(H)(S)00SL/SL1★	Wall Mount Receptacle	1C-15
SCPB(H)(S)00SLX/SLX1★	Wall Mount Receptacle	1C-15
SCPB(H)(S)00ST(G)★	Wall Mount Receptacle	1C-16
SCPB(H)(S)00SU(G)★	Wall Mount Receptacle	1C-16
SCPB(H)(S)00SV★	Wall Mount Receptacle	1C-17
SCPB(H)(S)00TRAC★	Wall Mount Receptacle	1C-17
SCPB(H)(S)00WK(G)★	Wall Mount Receptacle	1C-18
SCPB(H)(S)01-(Dash Only)★	In-Line Receptacle	1C-19
SCPB(H)(S)01A★	In-Line Receptacle	1C-19
SCPB(H)(S)01AE★	In-Line Receptacle	1C-20
SCPB(H)(S)01AF★	In-Line Receptacle	1C-20
SCPB(H)(S)01AG★	In-Line Receptacle	1C-21
SCPB(H)(S)01AG2G★	In-Line Receptacle	1C-21
SCPB(H)(S)01APT★	In-Line Receptacle	1C-22
SCPB(H)(S)01ARV★	In-Line Receptacle	1C-22
SCPB(H)(S)01ASB★	In-Line Receptacle	1C-23
SCPB(H)(S)01ASBF★	In-Line Receptacle	1C-23
SCPB(H)(S)01ASBT★	In-Line Receptacle	1C-24
SCPB(H)(S)01CF(Z)★	In-Line Receptacle	1C-24

★ Indicates additional alpha-numerics are required to complete part number

SPACECRAFT COMPONENTS CORP.
3040 Clayton Street
North Las Vegas, NV 89032
Phone: 702.851.7600
Fax: 702.851.7620
Email: salesinfo@spacecraft.com
Web: www.spacecraft.com

SCPB(H)(S)01E★	In-Line Receptacle	1C-20
SCPB(H)(S))01F★	In-Line Receptacle	1C-20
SCPB01FR**(C)★	In-Line Receptacle	1C-25
SCPB01FR**(PG)★	In-Line Receptacle	1C-25
SCPB01FR**(SPB)★	In-Line Receptacle	1C-26
SCPB(H)(S)01G★	In-Line Receptacle	1C-21
SCPB(H)(S)01G2G★	In-Line Receptacle	1C-21
SCPB(H)(S)01LA★	In-Line Receptacle	1C-26
SCPB(H)(S)01LAF★	In-Line Receptacle	1C-27
SCPB(H)(S)01LC(G)★	In-Line Receptacle	1C-27
SCPB(H)(S)01LCF(Z)★	In-Line Receptacle	1C-28
SCPB(H)(S)01LF★	In-Line Receptacle	1C-27
SCPBH01LPGM52★	In-Line Receptacle	1C-105
SCPBH01LPGF52★	In-Line Receptacle	1C-106
SCPB(H)(S)01LR★	In-Line Receptacle	1C-26
SCPB(H)(S)01NM(G)★	In-Line Receptacle	1C-28
SCPB(H)(S)01R★	In-Line Receptacle	1C-19
SCPB(H)(S)01RV★	In-Line Receptacle	1C-22
SCPB(H)(S)01SB★	In-Line Receptacle	1C-23
SCPB(H)(S)01SBF★	In-Line Receptacle	1C-23
SCPB(H)(S)01SBT★	In-Line Receptacle	1C-24
SCPB(H)(S)01SL/SL1★	In-Line Receptacle	1C-29
SCPB(H)(S)01SLX/SLX1★	In-Line Receptacle	1C-29
SCPB(H)(S)01ST(G)★	In-Line Receptacle	1C-30
SCPB(H)(S)01SU(G)★	In-Line Receptacle	1C-30
SCPB(H)(S)01SV★	In-Line Receptacle	1C-31
SCPB(H)(S)01TRAC★	In-Line Receptacle	1C-31
SCPB(H)(S)02A★	Box Mount Receptacle	1C-32
SCPB(H)(S)02R★	Box Mount Receptacle	1C-32
SCPB(H)(S)02YM★	Box Mount Receptacle	1C-32
SCPB(H)(S)03A★	Box Mount Receptacle, Rear Panel Mount	1C-34
SCPB(H)(S)03R★	Box Mount Receptacle, Rear Panel Mount	1C-34
SCPB(H)(S)03YM★	Box Mount Receptacle, Rear Panel Mount	1C-35
SCPB05-52★	Dummy Receptacle	1C-110
SCPB(G)(H)(S)06-(Dash only)★	Straight Plug	1C-55
SCPB(G)(H)(S)06A★	Straight Plug	1C-56
SCPB(G)(H)(S)06AGG★	Straight Plug	1C-58
SCPB(G)(H)(S)06AE★	Straight Plug	1C-56
SCPB(G)(H)(S)06AF★	Straight Plug	1C-57
SCPB(G)(H)(S)06AFGG★	Straight Plug	1C-57
SCPB(G)(H)(S)06AG★	Straight Plug	1C-58
SCPB(G)(H)(S)06AG2G★	Straight Plug	1C-59
SCPBH06AMPL52★	Straight Plug	1C-108
SCPB(G)(H)(S)06APT★	Straight Plug	1C-59
SCPB(G)(H)(S)06ARK★	Straight Plug	1C-60
SCPB(G)(H)(S)06ARKGG★	Straight Plug	1C-60
SCPB(G)(H)(S)06ARV★	Straight Plug	1C-61
SCPB(G)(H)(S)06ASB★	Straight Plug	1C-61
SCPB(G)(H)(S)06ASBF★	Straight Plug	1C-62
SCPB(G)(H)(S)06ASBT★	Straight Plug	1C-62
SCPB(G)(H)(S)06BC★	Straight Plug	1C-63
SCPB(G)(H)(S)06CF(Z)★	Straight Plug	1C-63
SCPB(G)(H)(S)06CF(Z)GG★	Straight Plug	1C-64
SCPB(G)(H)(S)06E★	Straight Plug	1C-56
SCPB(G)(H)(S)06F★	Straight Plug	1C-57
SCPB(G)(H)(S)06FGG★	Straight Plug	1C-57
SCPB(G)(H)(S)06G★	Straight Plug	1C-58
SCPB(G)(H)(S)06G2G★	Straight Plug	1C-59
SCPB(G)(H)(S)06LA★	Straight Plug	1C-65
SCPB(G)(H)(S)06LAF★	Straight Plug	1C-65
SCPB(G)(H)(S)06LC(G)★	Straight Plug	1C-66
SCPBH06LCFG52★	Straight Plug	1C-107
SCPB(G)(H)(S)06LC(G)GG★	Straight Plug	1C-66
SCPB(G)(H)(S)06LCF(Z)★	Straight Plug	1C-67
SCPB(G)(H)(S)06LCF(Z)GG★	Straight Plug	1C-67
SCPB(G)(H)(S)06LF★	Straight Plug	1C-65
SCPBH06LPGF52★	Straight Plug	1C-106

★ Indicates additional alpha-numerics are required to complete part number

CROSS REFERENCE/INDEX

SCPBH06LPGFG52★	Straight Plug	1C-107
SCPBH06LPGM52★	Straight Plug	1C-106
SCPBH06LPGMG52★	Straight Plug	1C-107
SCPB(G)(H)(S)06LR★	Straight Plug	1C-65
SCPBH06NM52★	Straight Plug	1C-108
SCPB(G)(H)(S)06NM(G)★	Straight Plug	1C-68
SCPB(G)(H)(S)06R★	Straight Plug	1C-56
SCPB(G)(H)(S)06RGG★	Straight Plug	1C-58
SCPB(G)(H)(S)06RK★	Straight Plug	1C-60
SCPB(G)(H)(S)06RKGG★	Straight Plug	1C-60
SCPB(G)(H)(S)06RV★	Straight Plug	1C-61
SCPB(G)(H)(S)06SB★	Straight Plug	1C-61
SCPB(G)(H)(S)06SBF★	Straight Plug	1C-62
SCPB(G)(H)(S)06SBT★	Straight Plug	1C-62
SCPB(G)(H)(S)06SL/SL1★	Straight Plug	1C-68
SCPB(G)(H)(S)06SLX/SLX1★	Straight Plug	1C-69
SCPB(G)(H)(S)06ST(G)★	Straight Plug	1C-69
SCPB(G)(H)(S)06SU(G)★	Straight Plug	1C-70
SCPB(G)(H)(S)06SV★	Straight Plug	1C-70
SCPB(G)(H)(S)06TRAC★	Straight Plug	1C-71
SCPB(G)(H)(S)06WK(G)★	Straight Plug	1C-71
SCPB(H)(S)07A★	Jam Nut Receptacle	1C-52
SCPB(H)(S)07R★	Jam Nut Receptacle	1C-52
SCPB(G)(H)(S)08A★	90 Degree Plug	1C-75
SCPB(G)(H)(S)08AGG★	90 Degree Plug	1C-76
SCPB(G)(H)(S)08AF★	90 Degree Plug	1C-76
SCPB(G)(H)(S)08AFGG★	90 Degree Plug	1C-77
SCPB(G)(H)(S)08ARK★	90 Degree Plug	1C-78
SCPB(G)(H)(S)08ARKGG★	90 Degree Plug	1C-79
SCPB(G)(H)(S)08ASB★	90 Degree Plug	1C-83
SCPB(G)(H)(S)08ASBF★	90 Degree Plug	1C-81
SCPB(G)(H)(S)08ASBT★	90 Degree Plug	1C-82
SCPBH08CF52★	90 Degree Plug	1C-109
SCPB(G)(H)(S)08CF(Z)★	90 Degree Plug	1C-83
SCPB(G)(H)(S)08CF(Z)GG★	90 Degree Plug	1C-84
SCPB(G)(H)(S)08F★	90 Degree Plug	1C-76
SCPB(G)(H)(S)08FGG★	90 Degree Plug	1C-77
SCPB(G)(H)(S)08LC(G)★	90 Degree Plug	1C-85
SCPB(G)(H)(S)08NM(G)★	90 Degree Plug	1C-86
SCPB(G)(H)(S)08R★	90 Degree Plug	1C-75
SCPB(G)(H)(S)08RGG★	90 Degree Plug	1C-76
SCPB(G)(H)(S)08RK★	90 Degree Plug	1C-78
SCPB(G)(H)(S)08RKGG★	90 Degree Plug	IC-79
SCPB(G)(H)(S)08SB★	90 Degree Plug	1C-80
SCPB(G)(H)(S)08SBF★	90 Degree Plug	1C-81
SCPB(G)(H)(S)08SBT★	90 Degree Plug	1C-82
SCPB(G)(H)(S)08ST(G)★	90 Degree Plug	1C-87
SCPB(G)(H)(S)08WK(G)★	90 Degree Plug	1C-88
SCPBH09CF52★	45 Degree Plug	1C-109
SCPB(H)(S)020A★	Wall Mount Receptacle	1C-33
SCPB020FR★	Wall Mount Receptacle	1C-33
SCPB(H)(S)020R★	Wall Mount Receptacle	1C-33
SCPBH020R52★	Front Panel Mount Receptacle	1C-105
SCPB(H)(S)020YM★	Wall Mount Receptacle	1C-34
SCPB(H)(S)030-(Dash Only)★	Wall Mount Receptacle, Rear Panel Mount	1C-35
SCPB(H)(S)030A★	Wall Mount Receptacle, Rear Panel Mount	1C-36
SCPB(H)(S)030AE★	Wall Mount Receptacle, Rear Panel Mount	1C-36
SCPB(H)(S)030AF★	Wall Mount Receptacle, Rear Panel Mount	1C-37
SCPB(H)(S)030AG★	Wall Mount Receptacle, Rear Panel Mount	1C-37
SCPB(H)(S)030AG2G★	Wall Mount Receptacle, Rear Panel Mount	1C-38
SCPB(H)(S)030APT★	Wall Mount Receptacle, Rear Panel Mount	1C-38
SCPB(H)(S)030ARK★	Wall Mount Receptacle, Rear Panel Mount	1C-39
SCPB(H)(S)030ARV★	Wall Mount Receptacle, Rear Panel Mount	1C-39
SCPB(H)(S)030ASB★	Wall Mount Receptacle, Rear Panel Mount	1C-40
SCPB(H)(S)030ASBF★	Wall Mount Receptacle, Rear Panel Mount	1C-40
SCPB(H)(S)030ASBT★	Wall Mount Receptacle, Rear Panel Mount	1C-41
SCPB(H)(S)030CF(Z)★	Wall Mount Receptacle, Rear Panel Mount	1C-41

★ Indicates additional alpha-numerics are required to complete part number

SPACECRAFT COMPONENTS CORP.
3040 Clayton Street
North Las Vegas, NV 89032
Phone: 702.851.7600
Fax: 702.851.7620
Email: salesinfo@spacecraft.com
Web: www.spacecraft.com

SCPB(H)(S)030CMEG★	Wall Mount Receptacle, Rear Panel Mount	1C-42
SCPB(H)(S)030E★	Wall Mount Receptacle, Rear Panel Mount	1C-36
SCPB(H)(S)030F★	Wall Mount Receptacle, Rear Panel Mount	1C-37
SCPB030FR★	Wall Mount Receptacle, Rear Panel Mount	1C-42
SCPB030FR**(C)★	Wall Mount Receptacle, Rear Panel Mount	1C-43
SCPB030FR**(PG)★	Wall Mount Receptacle, Rear Panel Mount	1C-43
SCPB030FR**(SPB)★	Wall Mount Receptacle, Rear Panel Mount	1C-44
SCPBH030FP52★	Rear Panel Mount Receptacle	1C-105
SCPB(H)(S)030G ★	Wall Mount Receptacle, Rear Panel Mount	1C-37
SCPB(H)(S)030G2G★	Wall Mount Receptacle, Rear Panel Mount	1C-38
SCPB(H)(S)030LA★	Wall Mount Receptacle, Rear Panel Mount	1C-44
SCPB(H)(S)030LAF★	Wall Mount Receptacle, Rear Panel Mount	1C-45
SCPB(H)(S)030LC(G)★	Wall Mount Receptacle, Rear Panel Mount	1C-45
SCPB(H)(S)030LCF(Z)★	Wall Mount Receptacle, Rear Panel Mount	1C-46
SCPB(H)(S)030LF★	Wall Mount Receptacle, Rear Panel Mount	1C-45
SCPB(H)(S)030LR★	Wall Mount Receptacle, Rear Panel Mount	1C-44
SCPB(H)(S)030NM(G)★	Wall Mount Receptacle, Rear Panel Mount	1C-46
SCPB(H)(S)030R★	Wall Mount Receptacle, Rear Panel Mount	1C-36
SCPB(H)(S)030RK★	Wall Mount Receptacle, Rear Panel Mount	1C-39
SCPB(H)(S)030RV★	Wall Mount Receptacle, Rear Panel Mount	1C-39
SCPB(H)(S)030SB★	Wall Mount Receptacle, Rear Panel Mount	1C-40
SCPB(H)(S)030SBF★	Wall Mount Receptacle, Rear Panel Mount	1C-40
SCPB(H)(S)030SBT★	Wall Mount Receptacle, Rear Panel Mount	1C-41
SCPB(H)(S)030SL/SL1★	Wall Mount Receptacle, Rear Panel Mount	1C-47
SCPB(H)(S)030SLX/SLX1★	Wall Mount Receptacle, Rear Panel Mount	1C-47
SCPB(H)(S)030ST(G)★	Wall Mount Receptacle, Rear Panel Mount	1C-48
SCPB(H)(S)030SU(G)★	Wall Mount Receptacle, Rear Panel Mount	1C-48
SCPB(H)(S)030SV★	Wall Mount Receptacle, Rear Panel Mount	1C-49
SCPB(H)(S)030TRAC★	Wall Mount Receptacle, Rear Panel Mount	1C-49
SCPB(H)(S)030WK(G)★	Wall Mount Receptacle, Rear Panel Mount	1C-50
SCPB(H)(S)030YM★	Wall Mount Receptacle, Rear Panel Mount	1C-50
SCPB(H)(S)038A★	90 Degree Wall Mount Receptacle, Rear Panel Mount	1C-51
SCPB(H)(S)038AF★	90 Degree Wall Mount Receptacle, Rear Panel Mount	1C-51
SCPB(H)(S)038CF(Z)★	90 Degree Wall Mount Receptacle, Rear Panel Mount	1C-52
SCPB(H)(S)038F★	90 Degree Wall Mount Receptacle, Rear Panel Mount	1C-51
SCPB(H)(S)038R★	90 Degree Wall Mount Receptacle, Rear Panel Mount	1C-51
SCPB52TF★	Dust Cap for Receptacle	1C-110
SCPB52TFM★	Dust Cover	1C-110
SCPB52TV★	Dust Cap for Plug	1C-110
SCPBH064PP52★	Straight Plug	1C-108
SCPB(G)(H)(S)064PPFR★	Panel Mount Plug	1C-72
SCPB065FR**(C)★	Straight Plug	1C-73
SCPB065FR**(PG)★	Straight Plug	1C-73
SCPB065FR**SPB)★	Straight Plug	1C-74
SCPB(G)(H)(S)065LC(G)★	Straight Plug	1C-74
SCPB(G)(H)(S)065LCF(Z)★	Straight Plug	1C-75
SCPB(H)(S)070R★	Jam Nut Receptacle	1C-53
SCPB(H)(S)070SU(G)★	Jam Nut Receptacle	1C-53
SCPB(H)(S)078A★	90 Degree Jam Nut Receptacle	1C-54
SCPB(H)(S)078AF★	90 Degree Jam Nut Receptacle	1C-54
SCPB(H)(S)078F★	90 Degree Jam Nut Receptacle	1C-54
SCPB(H)(S)078R★	90 Degree Jam Nut Receptacle	1C-54
SCPBTB(H)(S)★	Thru Bulkhead Receptacle	1C-55
SCPMD275★	Terminal Lug for 275/24 Cable	6C-15
SCPMD775★	Terminal Lug for 775/24 Cable	6C-15
SCPMD1600★	Terminal Lug for 1600/24 Cable	6C-15
SCPSE-02C	Coiled .250 Termination Band	6C-16
SCPSE-02F	Flat .250 Termination Band	6C-16
SCPSE-04C	Coiled .125 Termination Band	6C-16
SCPSE-04F	Flat .125 Termination Band	6C-16
T12-2500-★	Socket Contact, Size 18	3C-6
T12-3600-★	Socket Contact, Size 16	3C-6
T12-3608-★	Socket Contact, Size 16	3C-6
T12-3612-★	Socket Contact, Size 16	3C-6
T12-3613-★	Socket Contact, Size 16	3C-6
T12-3615-★	Socket Contact, Size 16	3C-6
T12-3620-★	Socket Contact, Size 16	3C-6

★ Indicates additional alpha-numerics are required to complete part number

CROSS REFERENCE/INDEX

T12-3626-★	Socket Contact, Size 16	3C-6
T12-4900-★	Socket Contact, Size 16S	3C-6
T12-4912-★	Socket Contact, Size 16S	3C-6
T12-4913-★	Socket Contact, Size 16S	3C-6
T12-4915-★	Socket Contact, Size 16S	3C-6
T12-4926-★	Socket Contact, Size 16S	3C-7
T12-6400-★	Socket Contact, Size 12	3C-7
T12-6408-★	Socket Contact, Size 12	3C-7
T12-6412-★	Socket Contact, Size 12	3C-7
T12-6415-★	Socket Contact, Size 12	3C-7
T12-6420-★	Socket Contact, Size 12	3C-7
T12-6422-★	Socket Contact, Size 12	3C-7
T12-6430-★	Socket Contact, Size 12	3C-7
T12-6431-★	Socket Contact, Size 12	3C-7
T12-6438-★	Socket Contact, Size 12	3C-7
T12-7900-★	Socket Contact, Size 8	3C-7
T12-7915-★	Socket Contact, Size 8	3C-7
T12-7918-★	Socket Contact, Size 8	3C-7
T12-7926-★	Socket Contact, Size 8	3C-7
T12-7930-★	Socket Contact, Size 8	3C-7
T12-7950-★	Socket Contact, Size 8	3C-7
T12-7958-★	Socket Contact, Size 8	3C-7
T12-8000-★	Socket Contact, Size 8	3C-7
T12-8015-★	Socket Contact, Size 8	3C-7
T12-8018-★	Socket Contact, Size 8	3C-7
T12-8026-★	Socket Contact, Size 8	3C-7
T12-8030-★	Socket Contact, Size 8	3C-7
T12-8050-★	Socket Contact, Size 8	3C-7
T12-8058-★	Socket Contact, Size 8	3C-7
T12-8500-★	Socket Contact, Size 4	3C-7
T12-8522-★	Socket Contact, Size 4	3C-7
T12-8525-★	Socket Contact, Size 4	3C-7
T12-8526-★	Socket Contact, Size 4	3C-7
T12-8530-★	Socket Contact, Size 4	3C-7
T12-8535-★	Socket Contact, Size 4	3C-7
T12-8550-★	Socket Contact, Size 4	3C-7
T12-8562-★	Socket Contact, Size 4	3C-7
T12-8600-★	Socket Contact, Size 4	3C-7
T12-8622-★	Socket Contact, Size 4	3C-7
T12-8625-★	Socket Contact, Size 4	3C-7
T12-8626-★	Socket Contact, Size 4	3C-7
T12-8630-★	Socket Contact, Size 4	3C-7
T12-8635-★	Socket Contact, Size 4	3C-7
T12-8650-★	Socket Contact, Size 4	3C-7
T12-8662-★	Socket Contact, Size 4	3C-7
T12-9200-★	Socket Contact, Size 1/0	3C-7
T12-9225-★	Socket Contact, Size 1/0	3C-7
T12-9235-★	Socket Contact, Size 1/0	3C-7
T12-9245-★	Socket Contact, Size 1/0	3C-7
T12-9246-★	Socket Contact, Size 1/0	3C-7
T12-9250-★	Socket Contact, Size 1/0	3C-7
T12-9275-★	Socket Contact, Size 1/0	3C-7
T12-9300-★	Socket Contact, Size 1/0	3C-7
T12-9325-★	Socket Contact, Size 1/0	3C-7
T12-9335-★	Socket Contact, Size 1/0	3C-7
T12-9345-★	Socket Contact, Size 1/0	3C-7
T12-9346-★	Socket Contact, Size 1/0	3C-7
T12-9350-★	Socket Contact, Size 1/0	3C-7
T12-9375-★	Socket Contact, Size 1/0	3C-7
T12-9700-★	Socket Contact, Size 4/0	3C-7
T12-9715-★	Socket Contact, Size 4/0	3C-7
T12-9735-★	Socket Contact, Size 4/0	3C-7
T12-9790-★	Socket Contact, Size 4/0	3C-7
TBF★-B	Thru-Bulkhead Receptacle (SCPBTB★)	1C-4
VAMG	Conduit	1C-31
VAMLG	Conduit	1C-31
VAMLT	Conduit	1C-31

★ Indicates additional alpha-numerics are required to complete part number

SPACECRAFT COMPONENTS CORP.
3040 Clayton Street
North Las Vegas, NV 89032
Phone: 702.851.7600
Fax: 702.851.7620
Email: salesinfo@spacecraft.com
Web: www.spacecraft.com

VAMT	Conduit	1C-31
VCSG	Conduit	1C-31
VCST	Conduit	1C-31
VG95234	Reverse Bayonet Connectors	IV
VPGRB	Conduit	1C-29
VPIRB	Conduit	1C-29 & 31
97B3100★	Reverse Bayonet Wall Mount Receptacle (SCPB00★)	1C-4
97B3101★	Reverse Bayonet In-Line Receptacle (SCPB01★)	1C-4
97B3102★	Reverse Bayonet Box Mount Receptacle (SCPB02★)	1C-4
97B3103★	Reverse Bayonet Box Mount Receptacle (SCPB03★)	1C-4
97B3106★	Reverse Bayonet Straight Plug (SCPB06★)	1C-4
97B3108★	Reverse Bayonet 90 Degree Plug (SCPB08★)	1C-4
97B31020★	Reverse Bayonet Wall Mount Receptacle (SCPB020★)	1C-4
97B31030★	Reverse Bayonet Wall Mount Receptacle (SCPB030★)	1C-4
97B4100★	Reverse Bayonet Wall Mount Receptacle (SCPB00★F80)	1C-4
97B4101★	Reverse Bayonet In-Line Receptacle (SCPB01★F80)	1C-4
97B4102★	Reverse Bayonet Box Mount Receptacle (SCPB02★F80)	1C-4
97B4103★	Reverse Bayonet Box Mount Receptacle (SCPB03★F80)	1C-4
97B4106★	Reverse Bayonet Straight Plug (SCPB06★F80)	1C-4
97B4108★	Reverse Bayonet 90 Degree Plug (SCPB08★F80)	1C-4
97B41020★	Reverse Bayonet Wall Mount Receptacle (SCPB020★F80)	1C-4
97B41030★	Reverse Bayonet Wall Mount Receptacle (SCPB030★F80)	1C-4
907-10★★-★	Thru-Bulkhead Receptacle (SCPBTB★)	1C-4
907-2★★★-★	Thru-Bulkhead Receptacle (SCPBTB★)	1C-4
998-1684-994	Terminal Lug for 90 Degree for 1600/24 Cable	6C-15
998-9775-996	Terminal Lug for 775/24 Cable	6C-15
998-9925-996	Terminal Lug for 925/24 Cable	6C-15
27911-12-T12	Pin Contact, Size 16S (R12-4912-140)	3C-4
27911-13-T9	Pin Contact, Size 16S (R12-4913-110)	3C-4
27911-13-T12	Pin Contact, Size 16S (R12-4913-140)	3C-4
27911-15-T9	Pin Contact, Size 16S (R12-4915-110)	3C-4
27911-15-T12	Pin Contact, Size 16S (R12-4915-140)	3C-4
27911-20-T9	Pin Contact, Size 16S (R12-4920-110)	3C-4
27911-20-T12	Pin Contact, Size 16S (R12-4920-140)	3C-4
27911-26-T9	Pin Contact, Size 16S (R12-4926-110)	3C-4
27911-26-T12	Pin Contact, Size 16S (R12-4926-140)	3C-4
27911-T9	Pin Contact, Size 16S (R12-4900-110)	3C-4
27911-T12	Pin Contact, Size 16S (R12-4900-140)	3C-4
27913-08-T9	Pin Contact, Size 16 (R12-3608-110)	3C-4
27913-08-T12	Pin Contact, Size 16 (R12-3608-140)	3C-4
27913-12-T9	Pin Contact, Size 16 (R12-3612-110)	3C-4
27913-12-T12	Pin Contact, Size 16 (R12-3612-140)	3C-4
27913-13-T9	Pin Contact, Size 16 (R12-3613-110)	3C-4
27913-13-T12	Pin Contact, Size 16 (R12-3613-140)	3C-4
27913-T9	Pin Contact, Size 16 (R12-3600-110)	3C-4
27913-T12	Pin Contact, Size 16 (R12-3600-140)	3C-4
27913-15-T9	Pin Contact, Size 16 (R12-3615-110)	3C-4
27913-15-T12	Pin Contact, Size 16 (R12-3615-140)	3C-4
27913-20-T9	Pin Contact, Size 16 (R12-3620-110)	3C-4
27913-20-T12	Pin Contact, Size 16 (R12-3620-140)	3C-4
27913-23-T9	Pin Contact, Size 16 (R12-3632-110)	3C-4
27913-23-T12	Pin Contact, Size 16 (R12-3632-140)	3C-4
27913-26-T9	Pin Contact, Size 16 (R12-3626-110)	3C-4
27913-26-T12	Pin Contact, Size 16 (R12-3626-140)	3C-4
27914-12-T9	Pin Contact, Size 12 (R12-6412-110)	3C-5
27914-12-T12	Pin Contact, Size 12 (R12-6412-140)	3C-5
27914-15-T9	Pin Contact, Size 12 (R12-6415-110)	3C-5
27914-15-T12	Pin Contact, Size 12 (R12-6415-140)	3C-5
27914-20-T9	Pin Contact, Size 12 (R12-6420-110)	3C-5
27914-20-T12	Pin Contact, Size 12 (R12-6420-140)	3C-5
27914-22-T9	Pin Contact, Size 12 (R12-6422-110)	3C-5
27914-22-T12	Pin Contact, Size 12 (R12-6422-140)	3C-5
27914-26-T9	Pin Contact, Size 12 (R12-6400-110)	3C-5
27914-26-T12	Pin Contact, Size 12 (R12-6400-140)	3C-5
27914-30-T9	Pin Contact, Size 12 (R12-6430-110)	3C-5
27914-30-T12	Pin Contact, Size 12 (R12-6430-140)	3C-5
27914-30M-T9	Pin Contact, Size 12 (R12-6431-110)	3C-5

★ Indicates additional alpha-numerics are required to complete part number

CROSS REFERENCE/INDEX

27914-30M-T12	Pin Contact, Size 12 (R12-6431-140)	3C-5
27914-38-T9	Pin Contact, Size 12 (R12-6438-110)	3C-5
27914-38-T12	Pin Contact, Size 12 (R12-6438-140)	3C-5
27915-T9	Pin Contact, Size 8 (R12-7900-110)	3C-5
27915-T12	Pin Contact, Size 8 (R12-7900-140)	3C-5
27915-15-T9	Pin Contact, Size 8 (R12-7915-110)	3C-5
27915-15-T12	Pin Contact, Size 8 (R12-7915-140)	3C-5
27915-18-T9	Pin Contact, Size 8 (R12-7918-110)	3C-5
27915-18-T12	Pin Contact, Size 8 (R12-7918-140)	3C-5
27916-T9	Pin Contact, Size 4 (R12-8500-110)	3C-5
27916-T12	Pin Contact, Size 4 (R12-8500-140)	3C-5
27916-22-T9	Pin Contact, Size 4 (R12-8522-110)	3C-5
27916-22-T12	Pin Contact, Size 4 (R12-8522-140)	3C-5
27916-26-T9	Pin Contact, Size 4 (R12-8526-110)	3C-5
27916-26-T12	Pin Contact, Size 4 (R12-8526-140)	3C-5
27916-30-T9	Pin Contact, Size 4 (R12-8530-110)	3C-5
27916-30-T12	Pin Contact, Size 4 (R12-8530-140)	3C-5
27916-50-T9	Pin Contact, Size 4 (R12-8550-110)	3C-5
27916-50-T12	Pin Contact, Size 4 (R12-8550-140)	3C-5
27916-62-T9	Pin Contact, Size 4 (R12-8562-110)	3C-5
27916-62-T12	Pin Contact, Size 4 (R12-8562-140)	3C-5
27917-T9	Pin Contact, Size 1/0 (R12-9200-110)	3C-5
27917-T12	Pin Contact, Size 1/0 (R12-9200-140)	3C-5
27917-45-T9	Pin Contact, Size 1/0 (R12-9245-110)	3C-5
27917-45-T12	Pin Contact, Size 1/0 (R12-9245-140)	3C-5
27917-50-T9	Pin Contact, Size 1/0 (R12-9250-110)	3C-5
27917-50-T12	Pin Contact, Size 1/0 (R12-9250-140)	3C-5
27917-78-T9	Pin Contact, Size 1/0 (R12-9225-110)	3C-5
27917-78-T12	Pin Contact, Size 1/0 (R12-9225-140)	3C-5
27917-90-T9	Pin Contact, Size 1/0 (R12-9235-110)	3C-5
27917-90-T12	Pin Contact, Size 1/0 (R12-9235-140)	3C-5
27917-107-T9	Pin Contact, Size 1/0 (R12-9275-110)	3C-5
27917-107-T12	Pin Contact, Size 1/0 (R12-9275-140)	3C-5
27935-T9	Socket Contact, Size 8 (T12-7900-140)	3C-7
27935-T12	Socket Contact, Size 8 (T12-8000-540)	3C-7
27935-15-T9	Socket Contact, Size 8 (T12-7915-140)	3C-7
27935-15-T12	Socket Contact, Size 8 (T12-8015-540)	3C-7
27935-18-T9	Socket Contact, Size 8 (T12-7918-140)	3C-7
27935-18-T12	Socket Contact, Size 8 (T12-8018-540)	3C-7
27935-30-T9	Socket Contact, Size 8 (T12-7930-140)	3C-7
27935-30-T12	Socket Contact, Size 8 (T12-8030-540)	3C-7
27935-50-T9	Socket Contact, Size 8 (T12-7950-140)	3C-7
27935-50-T12	Socket Contact, Size 8 (T12-8050-540)	3C-7
27935-58-T9	Socket Contact, Size 8 (T12-7958-140)	3C-7
27935-58-T12	Socket Contact, Size 8 (T12-8058-540)	3C-7
27936-T9	Socket Contact, Size 4 (T12-8500-140)	3C-7
27936-T12	Socket Contact, Size 4 (T12-8600-540)	3C-7
27936-22-T9	Socket Contact, Size 4 (T12-8522-140)	3C-7
27936-22-T12	Socket Contact, Size 4 (T12-8622-540)	3C-7
27936-26-T9	Socket Contact, Size 4 (T12-8526-140)	3C-7
27936-26-T12	Socket Contact, Size 4 (T12-8626-540)	3C-7
27936-30-T9	Socket Contact, Size 4 (T12-8530-140)	3C-7
27936-30-T12	Socket Contact, Size 4 (T12-8630-540)	3C-7
27936-50-T9	Socket Contact, Size 4 (T12-8550-140)	3C-7
27936-50-T12	Socket Contact, Size 4 (T12-8650-540)	3C-7
27936-62-T9	Socket Contact, Size 4 (T12-8562-140)	3C-7
27936-62-T12	Socket Contact, Size 4 (T12-8662-540)	3C-7
27937-T9	Socket Contact, Size 1/0 (T12-9200-140)	3C-7
27937-T12	Socket Contact, Size 1/0 (T12-9300-540)	3C-7
27937-45-T9	Socket Contact, Size 1/0 (T12-9245-140)	3C-7
27937-45-T12	Socket Contact, Size 1/0 (T12-9345-540)	3C-7
27937-50-T9	Socket Contact, Size 1/0 (T12-9250-140)	3C-7
27937-50-T12	Socket Contact, Size 1/0 (T12-9350-540)	3C-7
27937-78-T9	Socket Contact, Size 1/0 (T12-9225-140)	3C-7
27937-78-T12	Socket Contact, Size 1/0 (T12-9325-540)	3C-7
27937-90-T9	Socket Contact, Size 1/0 (T12-9235-140)	3C-7

★ Indicates additional alpha-numerics are required to complete part number

SPACECRAFT COMPONENTS CORP.
3040 Clayton Street
North Las Vegas, NV 89032
Phone: 702.851.7600
Fax: 702.851.7620
Email: salesinfo@spacecraft.com
Web: www.spacecraft.com

27937-90-T12	Socket Contact, Size 1/0 (T12-9335-540)	3C-7
27937-107-T9	Socket Contact, Size 1/0 (T12-9275-140)	3C-7
27937-107-T12	Socket Contact, Size 1/0 (T12-9375-540)	3C-7
27961-T9	Socket Contact, Size 16S (T12-4900-110)	3C-6
27961-T12	Socket Contact, Size 16S (T12-4900-140)	3C-6
27961-12-T9	Socket Contact, Size 16S (T12-4912-110)	3C-6
27961-12-T12	Socket Contact, Size 16S (T12-4912-140)	3C-6
27961-13-T9	Socket Contact, Size 16S (T12-4913-110)	3C-6
27961-13-T12	Socket Contact, Size 16S (T12-4913-140)	3C-6
27961-15-T9	Socket Contact, Size 16S (T12-4915-110)	3C-6
27961-15-T12	Socket Contact, Size 16S (T12-4915-140)	3C-6
27961-20-T9	Socket Contact, Size 16S (T12-4920-110)	3C-6
27961-20-T12	Socket Contact, Size 16S (T12-4920-140)	3C-6
27961-26-T9	Socket Contact, Size 16S (T12-4926-110)	3C-6
27961-26-T12	Socket Contact, Size 16S (T12-4926-140)	3C-6
27963-08-T9	Socket Contact, Size 16 (T12-3608-110)	3C-6
27963-08-T12	Socket Contact, Size 16 (T12-3608-140)	3C-6
27963-12-T9	Socket Contact, Size 16 (T12-3612-110)	3C-6
27963-12-T12	Socket Contact, Size 16 (T12-3612-140)	3C-6
27963-13-T9	Socket Contact, Size 16 (T12-3613-110)	3C-6
27963-13-T12	Socket Contact, Size 16 (T12-3613-140)	3C-6
27963-15-T9	Socket Contact, Size 16 (T12-3615-110)	3C-6
27963-15-T12	Socket Contact, Size 16 (T12-3615-140)	3C-6
27963-20-T9	Socket Contact, Size 16 (T12-3620-110)	3C-6
27963-20-T12	Socket Contact, Size 16 (T12-3620-140)	3C-6
27963-26-T9	Socket Contact, Size 16 (T12-3626-110)	3C-6
27963-26-T12	Socket Contact, Size 16 (T12-3626-140)	3C-6
27963-32-T9	Socket Contact, Size 16 (T12-3632-110)	3C-6
27963-32-T12	Socket Contact, Size 16 (T12-3632-140)	3C-6
27963-T9	Socket Contact, Size 16 (T12-3600-110)	3C-6
27963-T12	Socket Contact, Size 16 (T12-3600-140)	3C-6
27964-12-T9	Socket Contact, Size 12 (T12-6412-110)	3C-7
27964-12-T12	Socket Contact, Size 12 (T12-6412-140)	3C-7
27964-15-T9	Socket Contact, Size 12 (T12-6415-110)	3C-7
27964-15-T12	Socket Contact, Size 12 (T12-6415-140)	3C-7
27964-20-T9	Socket Contact, Size 12 (T12-6420-110)	3C-7
27964-20-T12	Socket Contact, Size 12 (T12-6420-140)	3C-7
27964-22-T9	Socket Contact, Size 12 (T12-6422-110)	3C-7
27964-22-T12	Socket Contact, Size 12 (T12-6422-140)	3C-7
27964-26-T9	Socket Contact, Size 12 (T12-6400-110)	3C-7
27964-26-T12	Socket Contact, Size 12 (T12-6400-140)	3C-7
27964-30-T9	Socket Contact, Size 12 (T12-6430-110)	3C-7
27964-30-T12	Socket Contact, Size 12 (T12-6430-140)	3C-7
27964-30M-T9	Socket Contact, Size 12 (T12-6431-110)	3C-7
27964-30M-T12	Socket Contact, Size 12 (T12-6431-140)	3C-7
27964-38-T9	Socket Contact, Size 12 (T12-6438-110)	3C-7
27964-38-T12	Socket Contact, Size 12 (T12-6438-140)	3C-7
29915-30-T9	Pin Contact, Size 8 (R12-7930-110)	3C-5
29915-30-T12	Pin Contact, Size 8 (R12-7930-140)	3C-5
29915-50-T9	Pin Contact, Size 8 (R12-7950-110)	3C-5
29915-50-T12	Pin Contact, Size 8 (R12-7950-140)	3C-5
29915-58-T9	Pin Contact, Size 8 (R12-7958-110)	3C-5
29915-58-T12	Pin Contact, Size 8 (R12-7958-140)	3C-5
46740P-T9	Pin Contact, Size 18 (R12-2500-110)	3C-4
46740P-T12	Pin Contact, Size 18 (R12-2500-140)	3C-4
46740S-T9	Socket Contact, Size 18 (T12-2500-110)	3C-6
46740S-T12	Socket Contact, Size 18 (T12-2500-140)	3C-6
47107-90-T9	Pin Contact, Size 4/0 (R12-9790-110)	3C-5
47107-90-T12	Pin Contact, Size 4/0 (R12-9790-140)	3C-5
47107-115-T9	Pin Contact, Size 4/0 (R12-97115-110)	3C-5
47107-115-T12	Pin Contact, Size 4/0 (R12-97115-140)	3C-5
47107-135-T9	Pin Contact, Size 4/0 (R12-97135-110)	3C-5
47107-135-T12	Pin Contact, Size 4/0 (R12-97135-140)	3C-5
47107-165-T9	Pin Contact, Size 4/0 (R12-9700-110)	3C-5
47107-165-T12	Pin Contact, Size 4/0 (R12-9700-140)	3C-5
47114-90-T9	Socket Contact, Size 4/0 (T12-9790-140)	3C-5

★ Indicates additional alpha-numerics are required to complete part number

CROSS REFERENCE/INDEX

47114-90-T12	Socket Contact, Size 4/0 (T12-9790-540)	3C-5
47114-115-T9	Socket Contact, Size 4/0 (T12-9715-140)	3C-5
47114-115-T12	Socket Contact, Size 4/0 (T12-9715-540)	3C-5
47114-135-T9	Socket Contact, Size 4/0 (T12-9735-140)	3C-5
47114-135-T12	Socket Contact, Size 4/0 (T12-9735-540)	3C-5
47114-165-T9	Socket Contact, Size 4/0 (T12-9700-140)	3C-5
47114-165-T12	Socket Contact, Size 4/0 (T12-9700-540)	3C-5
46646-0	Pin Contact, Size 1/0 (R12-9246-110)	3C-5
46647-0	Socket Contact, Size 1/0 (T12-9246-510)	3C-7

★ Indicates additional alpha-numerics are required to complete part number

SPACECRAFT COMPONENTS CORP.
3040 Clayton Street
North Las Vegas, NV 89032
Phone: 702.851.7600
Fax: 702.851.7620
Email: salesinfo@spacecraft.com
Web: www.spacecraft.com

All of Our Catalogs & Product Brochures on One Disc!

Including additional information on Spacecraft Components, connector education, videos and more.

Get your FREE copy by contacting us today!

SPACECRAFT COMPONENTS CORP.

702-851-7600

www.spacecraft.com

SPACECRAFT COMPONENTS CORP.

Your Connector Consultant Since 1962

SCP 50151 Style Connectors

SCPT 26482 Style
SC1 38999 Series I
SC2 38999 Series II
SC39 38999 Series III

SCPB Series

Connector Accessories

Connectors with Integrated Backshells

AS95234 Reverse Bayonet Connectors

Try Our Other Connector Products

Get All of Our Catalogs & Product Brochures on One Disc

SPACECRAFT COMPONENTS CORP.

Headquarters
3040 Clayton Street
North Las Vegas, NV 89032

Phone: 702.851.7600
Fax: 702.851.7620

Email: salesinfo@spacecraft.com
Web: www.spacecraft.com

Florida Office
4577 Nob Hill Road
Suite 106
Sunrise, FL 33351
Tel: 954.748.4540
Fax: 954.748.4128

South Carolina Office
25 Woods Lake Rd.,
Suite 403
Greenville, SC 29607
Tel: 954.748.4540
Fax: 954.748.4128

Italy Office
Spacecraft Components, Sp A
Milan, Italy
+39 (335] 719.4512

MAY.2019
CAT-302

COMPILED AND PRODUCED BY SPACECRAFT COMPONENTS CORP.

©2019 SPACECRAFT COMPONENTS CORP., NORTH LAS VEGAS, NV 89032